ECF40 Series

AC-DC Power Supplies

XP Power

40 Watts

- 40 W Convection Rating
- 1.5″ by 3″ Footprint
- Low 1.1″ Profile
- High Efficiency
- Medical and ITE Approvals
- Class I & Class II Installations
- High Power Density
- Less than 0.15 W No Load Input Power
- 3 Year Warranty

GREEN XP POWER

The ECF40 series is designed to minimize the no load power consumption and maximize efficiency to facilitate equipment design to meet the latest environmental legislation. Approved for medical and ITE applications in either Class I or Class II installations, this range of single output AC-DC power supplies are packaged in a low profile 1.1” height with a foot print of just 1.5” by 3”. The ECF40 provides up to 40W convection-cooled over the full 90-264 VAC input range, and operates down to 80 VAC with minimal de-rating. The power supply features two AC line fuses and low leakage currents required by medical applications. The low profile, low noise and safety approvals covering ITE and medical standards allows the versatile ECF40 series to be used in a wide range of applications.

Dimensions:

ECF40:
3.00 x 1.50 x 1.10″ (76.2 x 38.1 x 28.0 mm)

Models & Ratings

Output Power	Output Voltage	Output Current	Efficiency[1]	Model Number
40 W	12.0 V	3.34 A	91%	ECF40US12
40 W	15.0 V	2.67 A	92%	ECF40US15
40 W	18.0 V	2.23 A	93%	ECF40US18
40 W	24.0 V	1.67 A	91%	ECF40US24
40 W	36.0 V	1.11 A	90%	ECF40US36
40 W	48.0 V	0.83 A	90%	ECF40US48

Notes

1. Typical efficiency measured at full load and 230 VAC input.

Mechanical Details

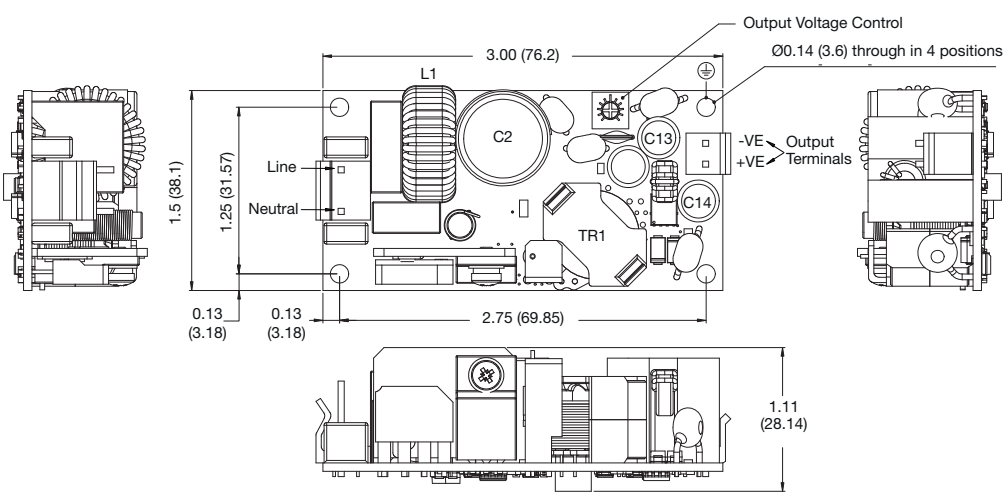

CN1 - Input Connector	
Pin 1	Neutral
Pin 2	Not Fitted
Pin 3	Line

Mates with JST housing VHR-3N and JST Series SVH-21T-P1.1 crimp terminals

Mounting hole marked with ⏚ must be connected to safety earth for class I applications

CN2 - Output Connector	
Pin 1	-Vout
Pin 2	+Vout

Mates with JST housing VHR-2N and JST Series SVH-21T-P1.1 crimp terminals

Notes

1. All dimensions shown in inches (mm).
   Tolerance: ±0.02 (0.5)
2. Weight: 0.15 lbs (69 g) approx.

sales@prom-elec.com / ООО ПРОМЭЛЕКТРОНИКА

Summary

Characteristic		Minimum	Typical	Maximum	Units	Notes & Conditions
Input Range		80	115/230	264	VAC	Derate output from 100% at 90 VAC to 90% at 85 VAC and 80% at 80 VAC
No Load Input Power				0.15	W	
Efficiency			90		%	230 VAC (see fig.1 & 2)
Operating Temperature		-25		+70	°C	See derating curve (fig.3)
Safety Approvals	ITE	IEC62368-1, IEC60950-1, UL 62368-1 2nd Ed., CSA C22.2 No. 62368-1-14, EN62368-1				
	Medical	IEC60601-1 Ed 3.1 Including Risk Management, ANSI/AAMI ES60601-1 & CSA C22.2 No.6061-1:08, EN60601-1				

Input

Characteristic	Minimum	Typical	Maximum	Units	Notes & Conditions
Input Voltage - Operating	80	115/230	264	VAC	Derate output from 100% at 90 VAC to 90% at 85 VAC and 80% at 80 VAC
Input Frequency	47	50/60	63	Hz	Agency approval, 47-63 Hz
Power Factor					EN61000-3-2 class A
Input Current - Full Load		0.8/0.4		A	115/230 VAC
Inrush Current			70	A	264 VAC cold start, 25 °C
Earth Leakage Current			250	µA	264 VAC/60 Hz
No load Input Power			0.15	W	
Input Protection	T3.15 A/250 A, 250 V Internal fuse fitted in line and neutral.				

Output - Main Output

Characteristic	Minimum	Typical	Maximum	Units	Notes & Conditions
Output Voltage	12		48	VDC	See Models and Ratings table
Initial Set Accuracy			±1	%	50% load, 115/230 VAC
Output Voltage Adjustment	10			%	
Minimum Load	0			A	No minimum load required
Start Up Delay		1	2	s	
Output Rise Time		50		ms	
Hold Up Time	8.3/20			ms	Min at full load 115/230 VAC
Line Regulation			±0.5	%	90-264 VAC
Load Regulation			1	%	0-100% load.
Transient Response			4	%	Recovery within 1% in less than 500 µs for a 50-75% and 75-50% load step
Over/Undershoot			5	%	Full load
Ripple & Noise			3/2	% pk-pk	12 V/15-48 V models
Overvoltage Protection	115		140	%	Vnom, recycle input to reset
Overload Protection	110		160	% I nom	
Short Circuit Protection					Continuous trip and restart (hiccup)
Temperature Coefficient			0.05	%/°C	

General

Characteristic	Minimum	Typical	Maximum	Units	Notes & Conditions
Efficiency		90		%	Average active mode efficiency at 25%, 50%, 75% and 100% load
Isolation: Input to Output	4000			VAC	2 MOPP
Input to Ground	1500			VAC	1 MOPP
Output to Ground	500			VAC	1 MOPP at output voltage
Power Density			8.1	W/in³	
Mean Time Between Failure	500			kHrs	MIL-HDBK-217F, Notice 2 +25 °C GB
Weight		0.15 (69.0)		lb(g)	

Efficiency Vs Load

Figure 1
ECF40US12

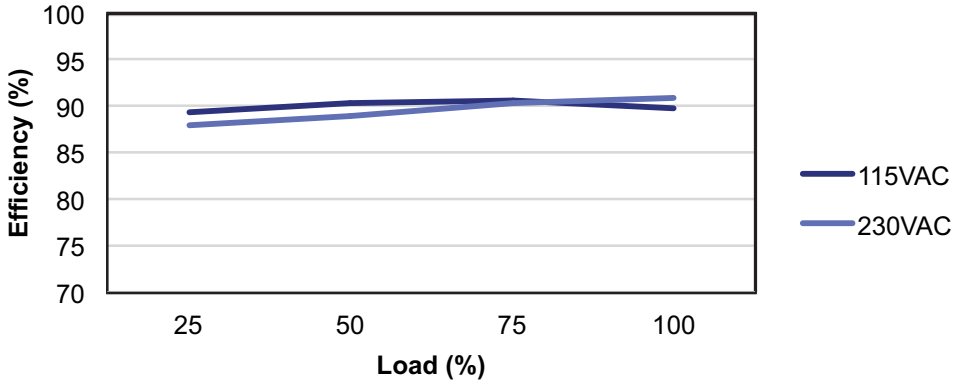

Figure 2
ECF40US24

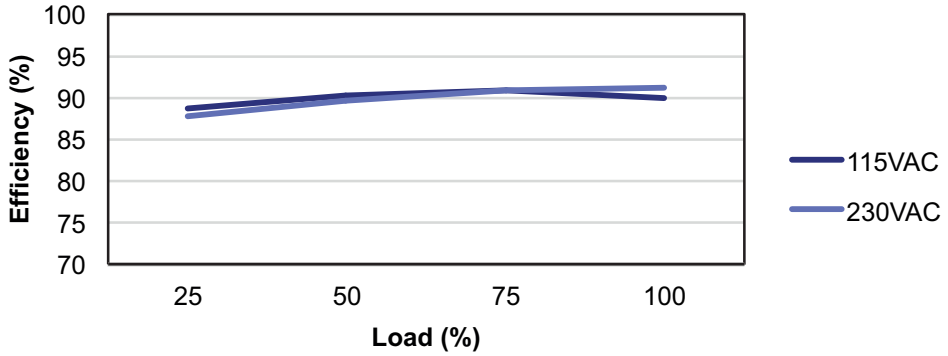

Environmental

Characteristic	Minimum	Typical	Maximum	Units	Notes & Conditions
Operating Temperature	-25		+70	°C	See derating curve, fig.3
Storage Temperature	-40		+85	°C	
Humidity	5		95	%RH	Non-condensing
Operating Altitude			5000/4000	m	ITE/Medical
Shock	±3 x 30g shocks in each plane, total 18 shocks. 30g = 11ms (+/- 0.5msecs), half sine. Conforms to EN60068-2-27				
Vibration	Single axis 10-500 Hz at 2g sweep and endurance at resonance in all 3 planes. Conforms to EN60068-2-6				

Temperature Derating Curve

Figure 3

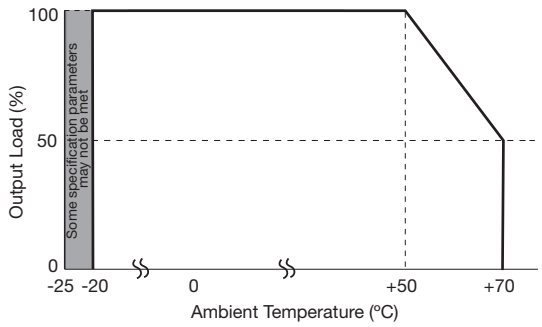

EMC: Emissions

Phenomenon	Standard	Test Level	Criteria	Notes & Conditions
Conducted	EN55011/32	Class B		
Radiated	EN55011/32	Class A		
Harmonic Current	EN61000-3-2	Class A		
Voltage Functions	EN61000-3-3			

EMC: Immunity

Phenomenon	Standard	Test Level	Criteria	Notes & Conditions
Medical Device EMC	IEC60601-1-2	Ed.4.0 : 2014	as below	
Low Voltage PSU EMC	EN61204-3	High severity level	as below	
ESD	EN61000-4-2	±8kV contact, ±15kV air	A	
Radiated	EN61000-4-3	3	A	
EFT	EN61000-4-4	3	A	
Surge	EN61000-4-5	Installation class 3	A	
Conducted	EN61000-4-6	3	A	
Magnetic Fields	EN61000-4-8	4	A	
Dips and Interruptions	EN61000-4-11 (100 VAC)	Dip 100% (0 VAC), 8.4 ms	A	25% derating
		Dip 100% (0 VAC), 16.7 ms	B	
		Dip 60% (40 VAC), 200 ms	B	
		Dip 30% (70 VAC), 500 ms	B	
		Dip 20% (80 VAC), 5000 ms	B	
		Int 100% (0 VAC), 5000 ms	B	
	EN61000-4-11 (115 VAC)	Dip 100% (0 VAC), 8.4 ms	A	
		Dip 100% (0 VAC), 16.7 ms	B	
		Dip 60% (40 VAC), 200 ms	B	
		Dip 30% (70 VAC), 500 ms	B	
		Dip 20% (80 VAC), 5000 ms	B	
		Int 100% (0 VAC), 5000 ms	B	
	EN61000-4-11 (240 VAC)	Dip 100% (0 VAC), 10 ms	A	
		Dip 100% (0 VAC), 20 ms	B	
		Dip 60% (96 VAC), 200 ms	B	
		Dip 30% (168 VAC), 500 ms	B	
		Dip 20% (192 VAC), 5000 ms	B	
		Int 100% (0 VAC), 5000 ms	B	
	EN60601-1-2 (100 VAC)	Dip 100% (0 VAC), 10 ms	A	30% derating
		Dip 100% (0 VAC), 20 ms	A	60% derating
		Dip 60% (40 VAC), 100 ms	A	75% derating
		Dip 30% (70 VAC), 500 ms	A	
		Int 100% (0 VAC), 5000 ms	B	
	EN60601-1-2 (240 VAC)	Dip 100% (0 VAC), 10 ms	A	
		Dip 100% (0 VAC), 20 ms	A	
		Dip 60% (96 VAC), 100 ms	A	
		Dip 30% (168 VAC), 500 ms	A	
		Int 100% (0 VAC), 5000 ms	B	

Safety Approvals

Safety Agency	Safety Standard	Notes & Conditions
CB Report	IEC60950-1, IEC62368-1	Information Technology
UL	UL62368-1 2nd Ed., CSA C22.2 No. 62368-1-14	Information Technology
EN	EN62368-1	Information Technology
CE	Meets all applicable directives	
UKCA	Meets all applicable legislation	

Safety Agency	Safety Standard	Notes & Conditions
CB Report	IEC60601-1 Ed 3.1 Including Risk Management	Medical
UL	ANSI/AAMI ES60601-1: & CSA C22.2 No.6061-1:08	Medical
CE	EN60601-1	Medical

Isolation	Safety Standard	Notes & Conditions
Primary to Secondary	2 x MOPP (Means of Patient Protection)	IEC60601-1 Ed 3.1
Primary to Earth	1 x MOPP (Means of Patient Protection)	
Secondary to Earth	1 x MOPP (Means of Patient Protection) at output voltage	

Mechanical Details

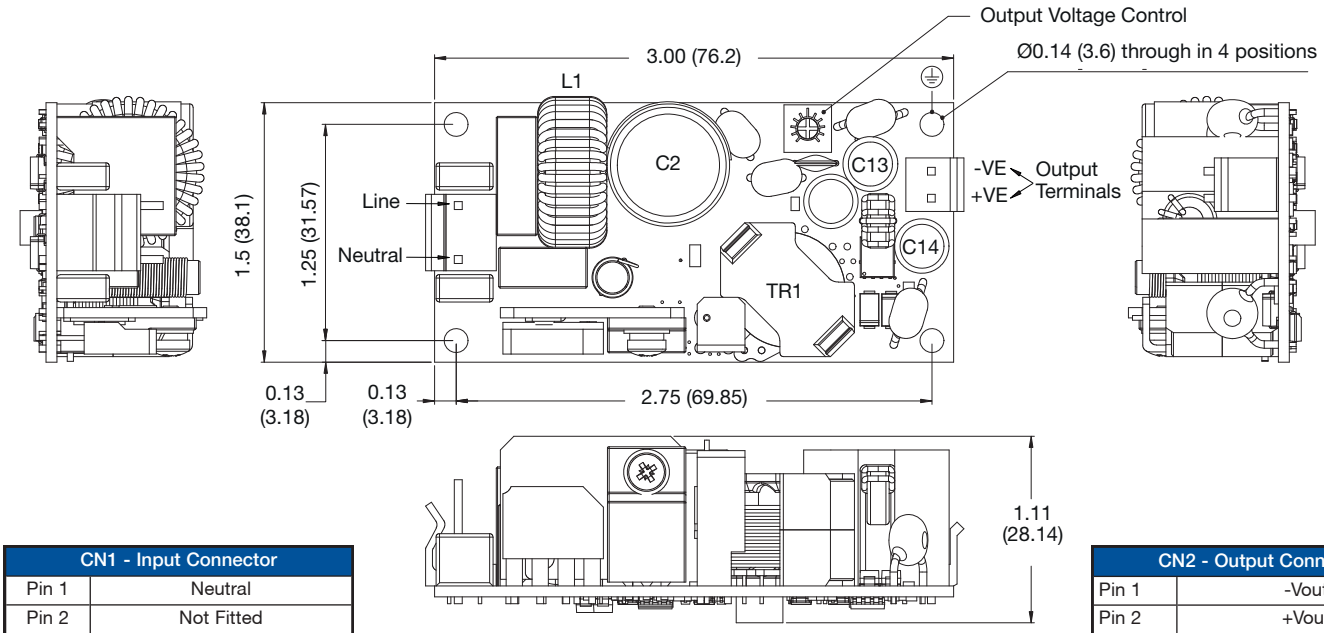

CN1 - Input Connector	
Pin 1	Neutral
Pin 2	Not Fitted
Pin 3	Line

Mates with JST housing VHR-3N and JST Series SVH-21T-P1.1 crimp terminals

Mounting hole marked with ⏚ must be connected to safety earth for class I applications

CN2 - Output Connector	
Pin 1	-Vout
Pin 2	+Vout

Mates with JST housing VHR-2N and JST Series SVH-21T-P1.1 crimp terminals

Notes

1. All dimensions shown in inches (mm).
   Tolerance: ±0.02 (0.5)
2. Weight: 0.14 lbs (66 g) approx.

Thermal Considerations

In order to ensure safe operation of the PSU in the end-use equipment, the temperature of the components listed in the table below must not be exceeded. Temperature should be monitored using thermocouples placed on the hottest part of the component (out of direct air flow). See Mechanical Details for component locations.

Temperature Measurements (At Maximum Ambient)	
Component	Max Temperature °C
TR1 Coil	120°C
L1 Coil	120°C
C2	105°C
C13	105°C
C14	105°C

Service Life

The estimated service life of the ECF40 is determined by the cooling arrangements and load conditions experienced in the end application. Due to the uncertain nature of the end application this estimated service life is based on the actual measured temperature of key capacitors with in the product when installed by the end application,

The graph below expresses the estimated lifetime based on the temperature of these key components based on the average temperature over the lifetime of the equipment.

Estimated Service Life vs Component Temperature
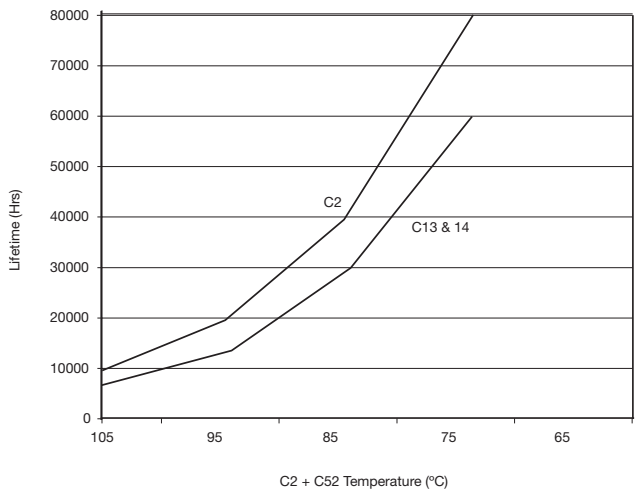
Figure 4