BOSSARD

BN 81 - ~DIN 555

Hexagon nuts ~0,8d

~DIN 555
~UNI 5592

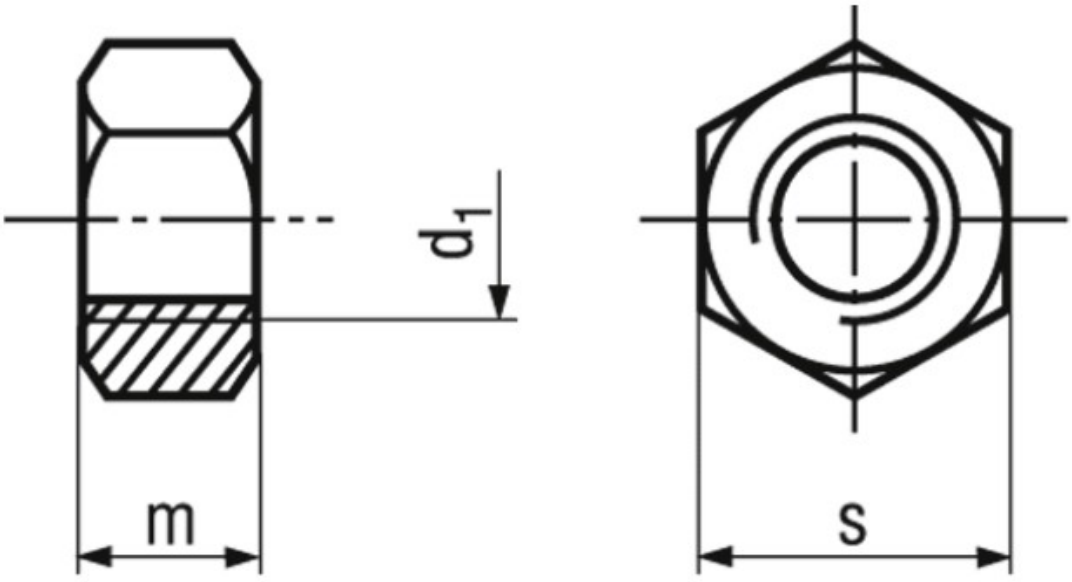

Material	**Polyamide 6.6**	Quality	**PA 6.6**
Color	**white**		

Article No. - 1400428	
d_1	M4
s	7
m~	3,2

DIN 555: Standard withdrawn