TITLE:	S-WEDGELOCK, 12 POSITION, ATM SERIES	DWG NO:	AWM-12S	REV:	A3	SH:	1	OF:	1

REVISIONS

REV	ECO	DESCRIPTION	DATE	BY	APPR
A3		RELEASE NEW DWG FORMAT	24/JUL/13	DRP	

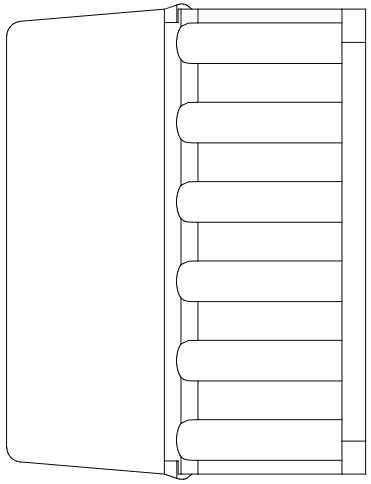

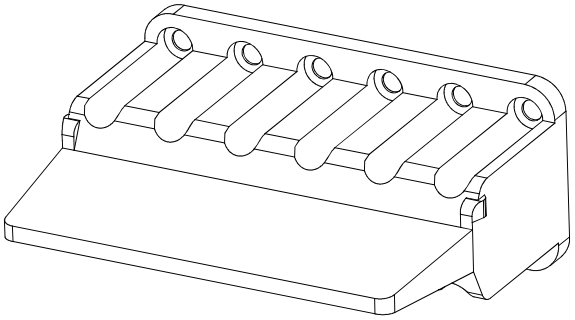

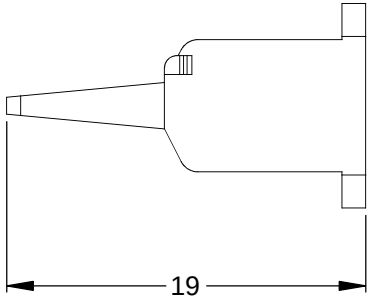

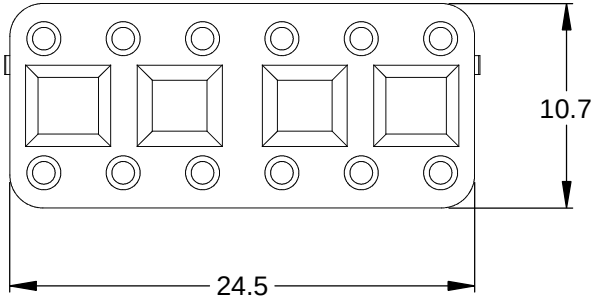

NOTES: UNLESS OTHERWISE SPECIFIED

1. MATERIAL: THERMOPLASTIC; COLOR: ORANGE
2. RoHS COMPLIANT
3. CAVITIES: 12
4. KEYED: N/A
5. USE WITH CONNECTORS: ATM06-12S*
   (* = MODIFICATIONS AND COLORS)
6. ALL DIMENSIONS ARE FOR REFERENCE USE ONLY.

	AWM-12S		
	PART NUMBER	DESCRIPTION	ITEM
QUANTITY	MATERIALS LIST		

UNLESS OTHERWISE SPECIFIED
1) All dimensions are in metric(mm).
2) Tolerances are as follows:
1 PL DEC ±0.30 | Fractions ±1/64
2 PL DEC ±0.15 | Angles ±1°
3 PL DEC ±0.08
3) Note reference = X

MATERIAL SPECIFICATIONS:

PROCESS SPECIFICATIONS:

NEXT ASS'Y:

SIGNATURES		DATE
DRAWN:	D.PARKS	24/JUL/13
CHECKED:		
ENGINEER:		
APPROVAL:		
CUSTOMER:		

THIS DRAWING IS SUPPLIED FOR INFORMATION ONLY. DESIGN FEATURES, SPECIFICATIONS AND PERFORMANCE DATA SHOWN HEREON ARE THE PROPERTY OF THE AMPHENOL CORPORATION. NO RIGHTS OF REPRODUCTION ARE IMPLIED. ALL DIMENSIONS ARE SUBJECT TO NORMAL MANUFACTURING VARIATIONS.

Amphenol

Sine Systems - www.amphenol-sine.com
44724 Morley Drive
Clinton Township, MI 48036

S-WEDGELOCK, 12 POSITION, ATM SERIES

SIZE	TYPE	DWG NO:	REVISION
A	C-	AWM-12S	A3

SCALE: NONE SHEET 1 OF 1

sales@prom-elec.com / ООО ПРОМЭЛЕКТРОНИКА