SCHRACK MINIATURE POWER PCB RYII & RYII REFLOW SOLDERABLE

GENERAL PURPOSE RELAYS
PCB RELAYS

INTRODUCTION

TE Connectivity (TE)'s Miniature Power PCB Relays RYII & RYII reflow is general purpose relay designed for various types of loads (e.g., resistive, inductive) with low component height. The relay is designed as 1 pole 8A with different contact variants: 1 form C (CO) or 1 form A (NO) or 1 form B (NC) contact.

Other advantages include: high initial dielectric strength, reinforced insulation (protection class II) and the possibility of the relay to use for the reflow-solderable process.

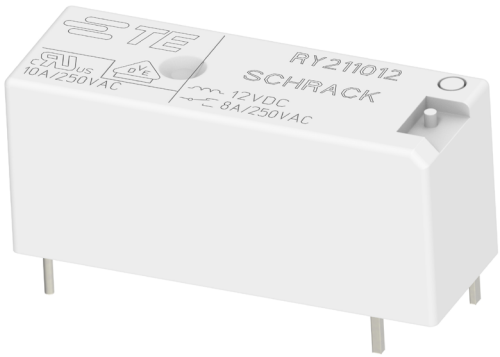

FEATURES

- 1 pole 8A, 1 form C (CO) or 1 form A (NO) or 1 form B (NC) contact
- Low component height 12.3mm
- 5kV/8mm coil-contact
- Reinforced insulation (protection class II)
- Pinnings: 3.2mm and 5mm
- Reflow-solderable version
- Especially suitable for resistive and inductive loads on form A (NO) and form B (NC) contacts
- Plastic materials according to IEC 60335-1 (domestic appliances)

APPLICATIONS

- Heating control
- Interface technology
- Domestic appliances
- Timers
- Temperature control

APPROVALS

- VDE Cert. No. 40009639
- UL E214025

Technical data of approved types on request

CONTACT DATA

Contact arrangement	1 form C (CO) or 1 form A (NO) or 1 form B (NC)
Rated voltage	250VAC
Max. switching voltage	400VAC
Rated current	8A
Breaking capacity max.	2000VA
Contact material	AgNi0.15, $AgSnO_2$
Frequency of operation, with/without load	6/1200min-1
Operate/release time max.	9/5ms
Bounce time max., form A/form B	6/10ms

CONTACT RATINGS

Type	Contact	Load	Cycles
IEC61810			
RY531	A (NO)	8A, 250VAC, 70°C	$100x10^3$
RY211	A (NO)	8A, 250VAC, 75°C	$100x10^3$
RY211	A (NO)	8A, 250VAC, 85°C	$50x10^3$
RY211	B (NC)	8A, 250VAC, 70°C	$50x10^3$
UL61810-1 (UL508)			
RY211	A/B (NO/NC)	10A, 250VAC, general purpose, 70°C	$30x10^3$
RY211	A (NO)	1/2hp, 240VAC, 85°C	$30x10^3$
RY211	B (NC)	B300, 70°C	$6x10^3$
RY211	A (NO)	8A, 250VAC, 85°C	$100x10^3$
RY211	A (NO)	8A, 24VDC, 85°C	$30x10^3$
RY211	A (NO)	B300, 85°C	$30x10^3$
RY211	A (NO)	C300, 105°C	$30x10^3$
RY211	A (NO)	1/3 hp, 250VAC, 85°C	$30x10^3$
RY211	A (NO)	1/4 hp, 120VAC, 70°C	$30x10^3$
EN60730-1			
RY211	A/B (NO/NC)	6(4)A, 250VAC, 85°C	$100x10^3$
RY211	A (NO)	8(4)A, 250VAC, 75°C	$50x10^3$
RY211	A (NO)	8(4)A, 250VAC, 85°C	$30x10^3$
RY211	A (NO)	2(2)A, 250VAC, -40 / +105°C	$100x10^3$
RY211	C (CO)	2(2)A, 250VAC, -40 / +105°C	$30x10^3$
Mechanical endurance, DC coil		$30x10^6$ operations	

MAX. DC LOAD BREAKING CAPACITY

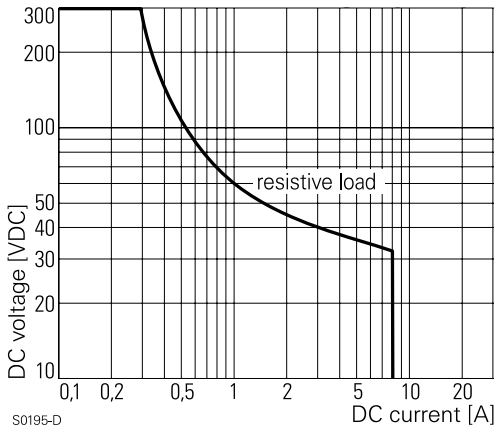

ELECTRICAL ENDURANCE

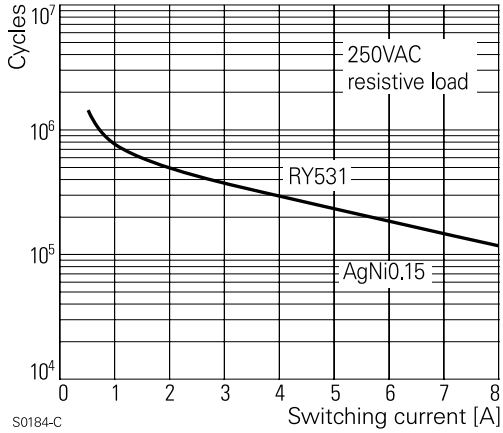

COIL DATA

Coil voltage range	5 to 60VDC
Operative range, IEC 61810	2

COIL VERSIONS, DC COIL

Coil code	Rated voltage VDC	Operate voltage VDC	Release voltage VDC	Coil resistance Ω±10%	Rated coil power mW
005	5	3.5	0.5	112	223
006	6	4.2	0.6	162	222
009	9	6.3	0.9	320	253
012	12	8.4	1.2	627	230
024	24	16.8	2.4	2350	245
048	48	33.6	4.8	9391	245
060	60	42.0	6.0	14000	257

All figures are given for coil without pre energization, at ambient temperature +23°C.

Other coil voltages on request.

COIL OPERATING RANGE DC

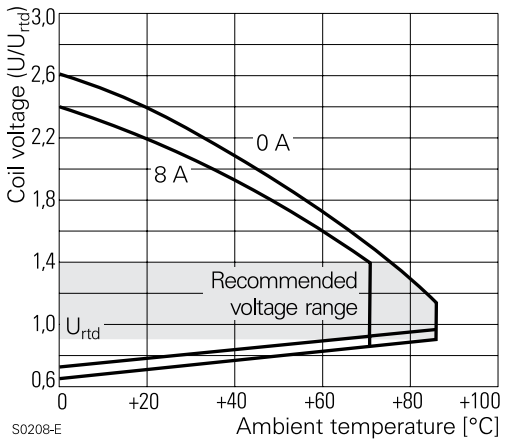

INSULATION DATA

Initial dielectric strength	
Between open contacts	1000V_{rms}
Between contact and coil	5000V_{rms}
Clearance/creepage	
Between contact and coil	≥8/8mm
Material group of insulation parts	IIIa
Tracking index of relay base	PTI250
Reflow-solderable version	PTI175

OTHER DATA

Material compliance	EU RoHS/ELV, China RoHS, REACH, Halogen content refer to the Product Compliance Support Center at **www.te.com/customersupport/rohssupportcenter**
Ambient temperature	-40 to +70°C +85°C at 6A
Category of environmental protection	
IEC 61810	RTII - flux proof RTIII - wash tight [1)]
Vibration resistance (functional)	
Form A (NO) / form B (NC)	20/5g

OTHER DATA CONTINUED

Shock resistance (functional)	
Form A (NO) / form B (NC)	20/5g
Shock resistance (destructive)	100g
Terminal type	PCB-THT, PCB-THR
Weight	8 g
Resistance to soldering heat THT	
IEC 60068-2-20	RTII: 270°C/10s RTIII: 260°C/5s
Resistance to soldering heat THR	
IEC 60068-2-58	250°C, no infrared heating allowed
Packaging/unit	
standard version	tube/20 pcs., box/500 pcs.
reflow version	reel/280 pcs. box/1120 pcs. (4 reels)

1) not available as reflow-solderable version

DIMENSIONS

Pinning 3.2 mm

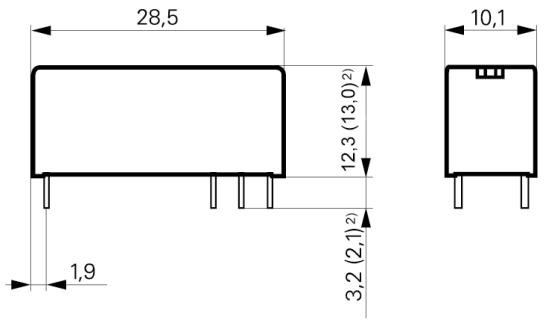

Pinning 5 mm

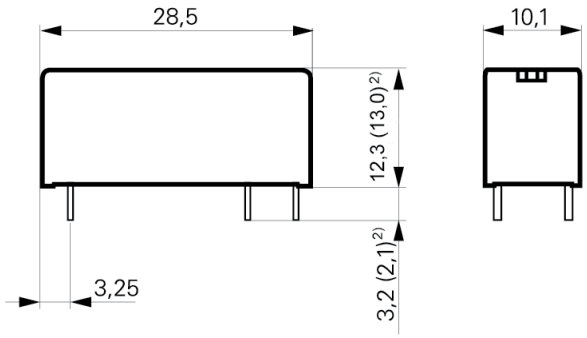

2) Values in brakets are valid for reflow-solderable version

PCB LAYOUT / TERMINAL ASSIGNMENT

Bottom view on solder pins

1 form C (CO) contact, 3.2 mm

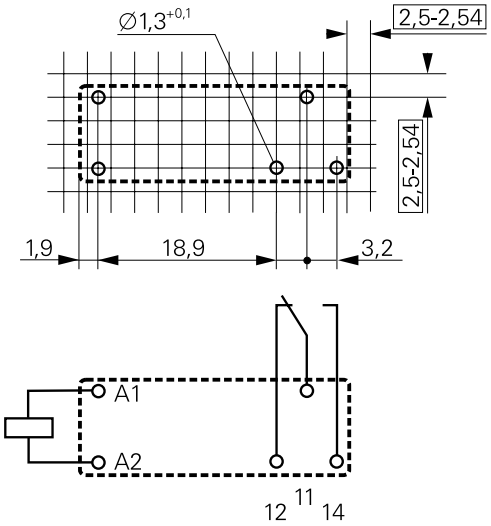

1 form A (NO), 1 form B (NC) contact 5 mm

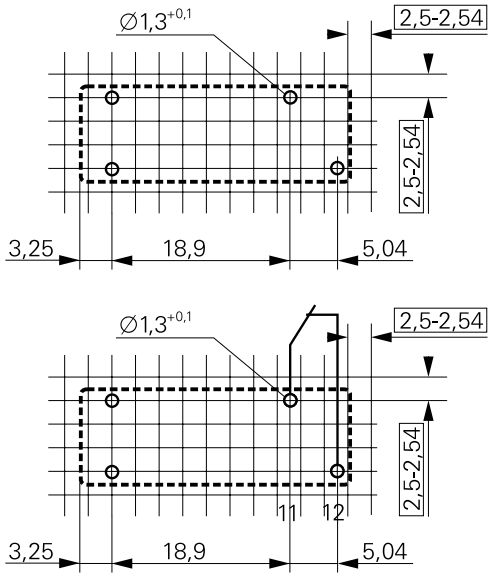

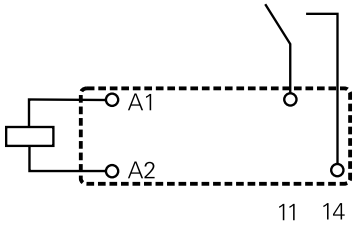

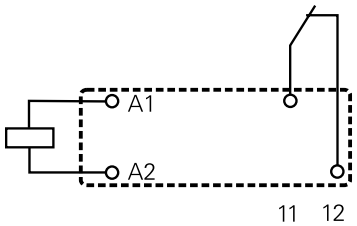

SOLDERING PROFILE FOR REFLOW-SOLDERABLE VERSION

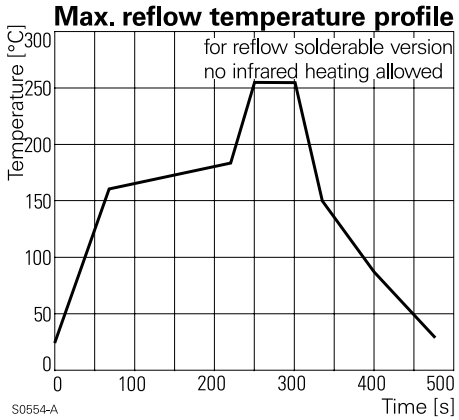

TAPE DIMENSIONS

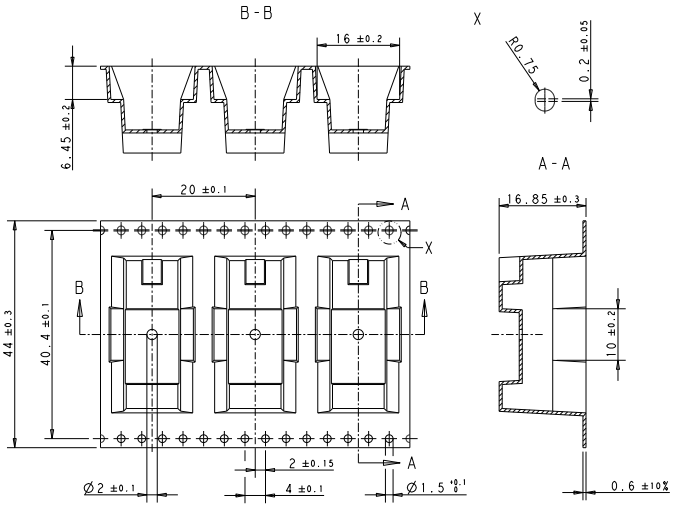

REEL DIMENSIONS

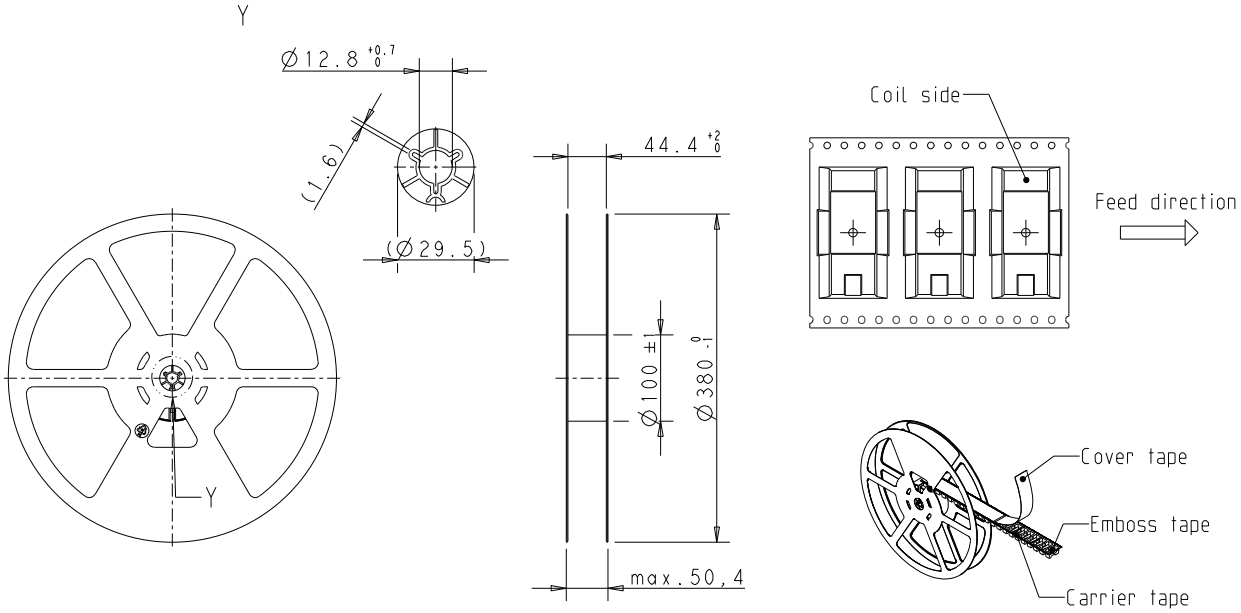

PRODUCT CODE STRUCTURE

Part Number

RY 6 1 1 012 _

Type

RY	Miniature Power PCB RYII & RYII reflow solderable

Version

2	pinning 3.2mm, flux proof
5	pinning 5mm, flux proof
6	pinning 3.2mm, wash tight [2)]
A	pinning 5mm, wash tight [2)]

Contact arrangement

1	1 form C (1 CO), pinning 3.2mm
3	1 form A (1 NO), pinning 5mm
5	1 form B (1 NC), pinning 5mm

Version

Blank	Standard version
R	Reflow-solderable

Coil

Coil code	please refer to coil versions table

Contact material

1	AgNi 0.15
2	AgNi 0.15 gold plated
3	$AgSnO_2$

PRODUCT INFORMATION

Product code	Version	Contacts	Contact material	Coil	TE Part Number
RY211005	Pinning 3.2 mm flux proof	1 form C, 1 CO contact	AgNi 0.15	5VDC	4-1393224-2
RY211006				6VDC	4-1393224-3
RY211012				12VDC	4-1393224-6
RY211024				24VDC	4-1393224-9
RY211048				48VDC	5-1393224-1
RY212005			AgNi 0.15 gold plated	5VDC	5-1393224-2
RY212006				6VDC	5-1393224-3
RY212012				12VDC	5-1393224-5
RY212024				24VDC	5-1393224-8
RY212048				48VDC	5-1393224-9
RY213005			$AgSnO_2$	5VDC	6-1393224-0
RY213006				6VDC	9-1393224-0
RY213012				12VDC	6-1393224-1
RY213024				24VDC	6-1393224-2
RY213048				48VDC	6-1393224-3

SCHRACK Miniature Power PCB RYII & RYII Reflow Solderable

General Purpose Relays

Product code	Version	Contacts	Contact material	Coil	TE Part Number
RY531005	Pinning 5 mm flux proof	1 form A, 1 NO contact	AgNi 0.15	5VDC	7-1393224-6
RY531006				6VDC	7-1393224-7
RY531012				12VDC	7-1393224-9
RY531024				24VDC	8-1393224-2
RY531048				48VDC	8-1393224-3
RY532012			AgNi 0.15 gold plated	12VDC	8-1393224-4
RY532024				24VDC	8-1393224-5
RY533006			$AgSnO_2$	6VDC	8-1393224-6
RY533012				12VDC	8-1393224-8
RY533024				24VDC	8-1393224-9
RY533048				48VDC	9-1393224-0
RY611005	Pinning 3.2 mm wash tight	1 form C, 1 CO contact	AgNi 0.15	5VDC	1-1393225-7
RY611006				6VDC	1-1393225-8
RY611012				12VDC	1-1393225-9
RY611024				24VDC	2-1393225-1
RY611048				48VDC	2-1393225-2
RY612005			AgNi 0.15 gold plated	5VDC	2-1393225-3
RY612006				6VDC	2-1393225-4
RY612012				12VDC	2-1393225-6
RY612024				24VDC	2-1393225-9
RY612048				48VDC	3-1393225-0
RY613005			$AgSnO_2$	5VDC	5-1419136-2
RY613012				12VDC	3-1393225-1
RY613024				24VDC	3-1393225-3
RY613048				48VDC	3-1393225-4
RY631024		1 form A, 1 NO contact	AgNi 0.15	24VDC	4-1415400-1
RYA31005	Pinning 5 mm wash tight			5VDC	1393224-7
RYA31006				6VDC	1393224-8
RYA31012				12VDC	1393224-9
RYA31024				24VDC	1-1393224-2
RYA31048				48VDC	1-1393224-3
RYA32005			AgNi 0.15 gold plated	5VDC	1-1393224-4
RYA32006				6VDC	8-1393224-8
RYA32012				12VDC	1-1393224-6
RYA32024				24VDC	1-1393224-8
RYA33005			AgSnO2	5VDC	1-1393224-9
RYA33024				24VDC	2-1393224-1

Product code	Version	Contacts	Contact material	Coil	Part Number
RY211005R	pinning 3.2mm flux proof reflow solderable	1 form C, 1 CO contact	AgNi 0.15	5VDC	1-1956170-2
RY211012R				12VDC	1-1956170-6
RY211024R				24VDC	1956164-1
RY531005R	pinning 5.0mm flux proof reflow solderable	1 form A, 1 NO contact		5VDC	1-1956171-1
RY531012R				12VDC	1-1956171-4
RY531024R				24VDC	1-1956171-7

te.com

©2025 TE Connectivity Plc. family of companies. All Rights Reserved.

TE Connectivity, SCHRACK, TE Connectivity (logo) and Every Connection Counts are trademarks. All other logos, products and/or company names referred to herein might be trademarks of their respective owners.

While TE has made every reasonable effort to ensure the accuracy of the information in this document, TE does not guarantee that it is error-free, nor does TE make any other representation, warranty or guarantee that the information is accurate, correct, reliable or current. TE reserves the right to make any changes to the information contained herein without prior notice. TE Connectivity assumes only those obligations set forth in the terms and conditions for this product and shall in no event be liable for any incidental, indirect, or consequential damages arising out of the sale, resale, use, or misapplication of the product. TE expressly disclaims any implied warranties with respect to the information contained herein, including, but not limited to, implied warranties of merchantability or fitness for a particular purpose. Dimensions, specifications and/or information contained herein are for reference purposes only and are subject to change without notice. Consult TE for the latest dimensions, specifications and/or information. Users of TE Connectivity products must make their own assessment as to whether the respective product is suitable for the respective desired application.

04/25 ED