TA45 2 pole Rocker

Circuit Breaker for Equipment thermal, 2 pole, Rocker actuation

Basic type

With auxiliary contact

With undervoltage protection

See below:
Approvals and Compliances

Description

- Thermal circuit breaker
- 1 or 2 pole thermal overload protection
- Positively trip-free release
- High configurability
- Rocker non-illuminated or illuminated
- Snap-in version
- Quick connect terminal 6.3 x 0.8 mm or screw clamp terminal M3.5 x 6 mm (lineside P1, P2)

Applications

- Power tools
- Industrial appliances
- Power supplies
- Equipment for construction
- Cleaning equipment

Weblinks

pdf data sheet, html datasheet, General Product Information, Distributor-Stock-Check, Detailed request for product, Product News

Technical Data

Rated Voltage AC	240 VAC
Rated Voltage DC	60 VDC
Rated current range AC	0.05 - 20 A
Conditional short circuit capacity Inc	IEC 60934: PC1, AC 240 V: 1 kA
Short circuit capacity Icn	IEC 60934: At In < 3 A/ 240 VAC: 10xIn (max. 3 cycles) At In ≥ 3 A/ 240 VAC: 300A (max. 3 cycles) At In < 3 A/ 60 VDC: 10xIn (max. 3 cycles) At In ≥ 3 A/ 48 VDC: 120A (max. 3 cycles)
Degree of Protection	front side IP40 acc. to IEC 60529 With factory mounted protection cover IP54
Dielectric Strength	4 kVAC
Insulation Resistance	500 VDC > 100 MΩ
Lifetime	mechanical: 50'000 switching cycles
	AC: 1 x Ir: 50'000 switching cycles
	DC: 1 x Ir: 50'000 switching cycles
Overload	AC: min. 40 trips @ 6 x Ir
	DC: min. 40 trips @ 4 x Ir
Allowable Operation Temp.	-10 °C to 55 °C
Storage Temperature	-10 °C to 55 °C
Vibration Resistance	± 0.75 mm @ 5 - 60 Hz acc. to IEC 60068-2-6, test Fc 10 G @ 60 - 500 Hz acc. to IEC 60068-2-6, test Fc
Shock Resistance	30 G / 18 ms acc. to IEC 60068-2-27, test Ea
Tripping Type	Thermal
Actuation Type	Rocker
Weight	30 - 50 g

Approvals and Compliances

Detailed information on product approvals, code requirements, usage instructions and detailed test conditions can be looked up in Details about Approvals

SCHURTER products are designed for use in industrial environments. They have approvals from independent testing bodies according to national and international standards. Products with specific characteristics and requirements such as required in the automotive sector according to IATF 16949, medical technology according to ISO 13485 or in the aerospace industry can be offered exclusively with customer-specific, individual agreements by SCHURTER.

sales@prom-elec.com / ООО ПРОМЭЛЕКТРОНИКА

Approvals

The approval mark is used by the testing authorities to certify compliance with the safety requirements placed on electronic products.

Approval Reference Type: TA45

Approval Logo	Certificates	Certification Body	Description
	VDE Approvals	VDE	VDE Certificate Number: 40019880
	UL Approvals	UL	UR File Number: E71572
	CCC Approvals	CCC	CCC Certificate Number: 2020970307001847

Product standards

Product standards that are referenced

Organization	Design	Standard	Description
	Designed according to	IEC 60934	Circuit-breakers for equipment (CBE)
	Designed according to	UL 1077	Standard for Supplementary Protectors for Use in Electrical Equipment
	Designed according to	CSA C22.2 No. 235	Supplementary Protectors
	Designed according to	GB 17701	Circuit-breaker for equipment

Application standards

Application standards where the product can be used

Organization	Design	Standard	Description
	Suitable for applications acc.	IEC/UL 62368-1	Audio/video, information and communication technology equipment - Part 1: Safety requirements

Compliances

The product complies with following Guide Lines

Identification	Details	Initiator	Description
	CE declaration of conformity	SCHURTER AG	The CE marking declares that the product complies with the applicable requirements laid down in the harmonisation of Community legislation on its affixing in accordance with EU Regulation 765/2008.
	RoHS	SCHURTER AG	Directive RoHS 2011/65/EU, Amendment (EU) 2015/863
	China RoHS	SCHURTER AG	The law SJ / T 11363-2006 (China RoHS) has been in force since 1 March 2007. It is similar to the EU directive RoHS.
	REACH	SCHURTER AG	On 1 June 2007, Regulation (EC) No 1907/2006 on the Registration, Evaluation, Authorization and Restriction of Chemicals 1 (abbreviated as "REACH") entered into force.

Dimension [mm]
Quick connect terminal

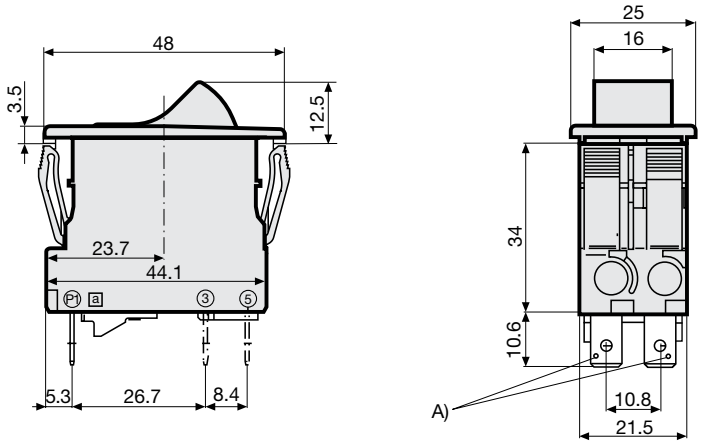

A) Quick connect terminal, IEC 61210, A6.3-0.8 mm

Undervoltage release, remote trip release

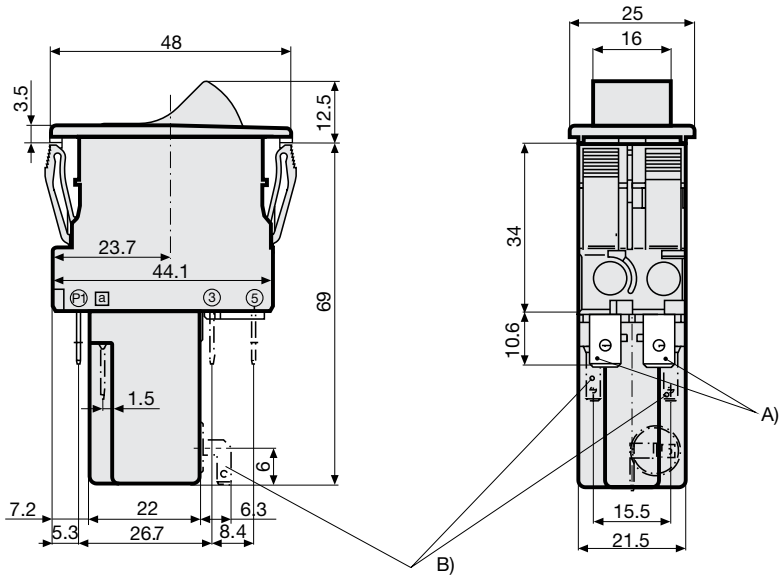

A) Quick connect terminal, IEC 61210, A6.3-0.8 mm B) Quick connect terminal, IEC 61210, A2.8-0.8 mm

Quick connect terminal with auxiliary contact

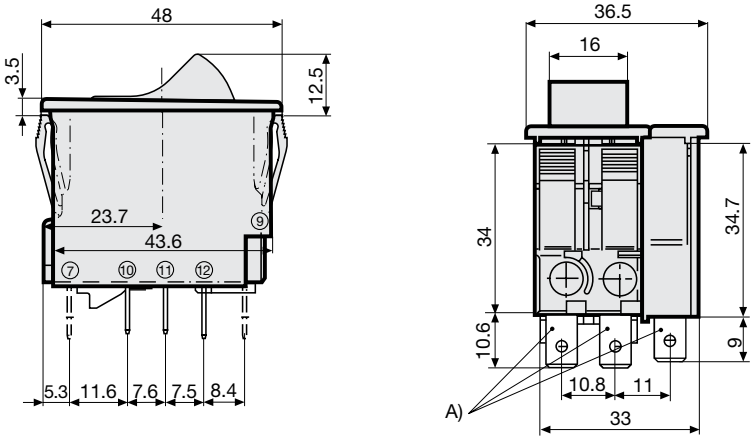

A) Quick connect terminal, IEC 61210, A6.3-0.8 mm

Undervoltage release, remote trip release, auxiliary contact

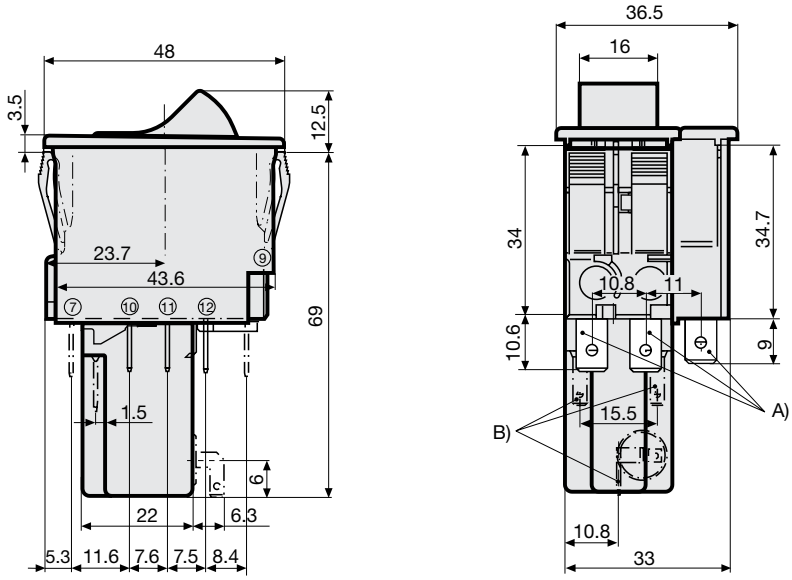

A) Quick connect terminal, IEC 61210, A6.3-0.8 mm B) Quick connect terminal, IEC 61210, A2.8-0.8 mm

Screw terminal

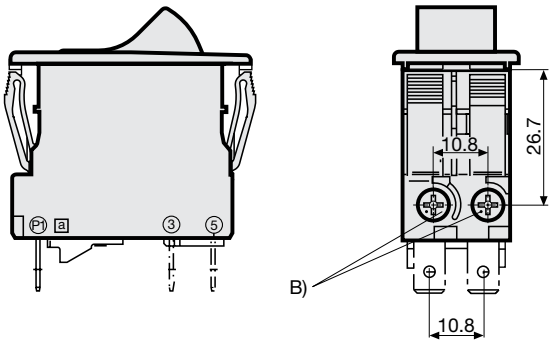

B) Screw type M3, 5x6 (Philips Form H), maximum torque 1 Nm

Screw clamp terminal with auxiliary contact

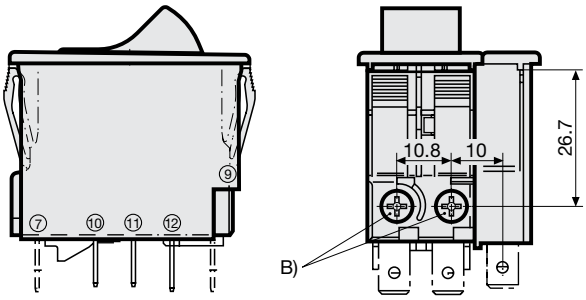

B) Screw type M3, 5x6 (Philips Form H), maximum torque 1 Nm

Mechanical lock-out latch

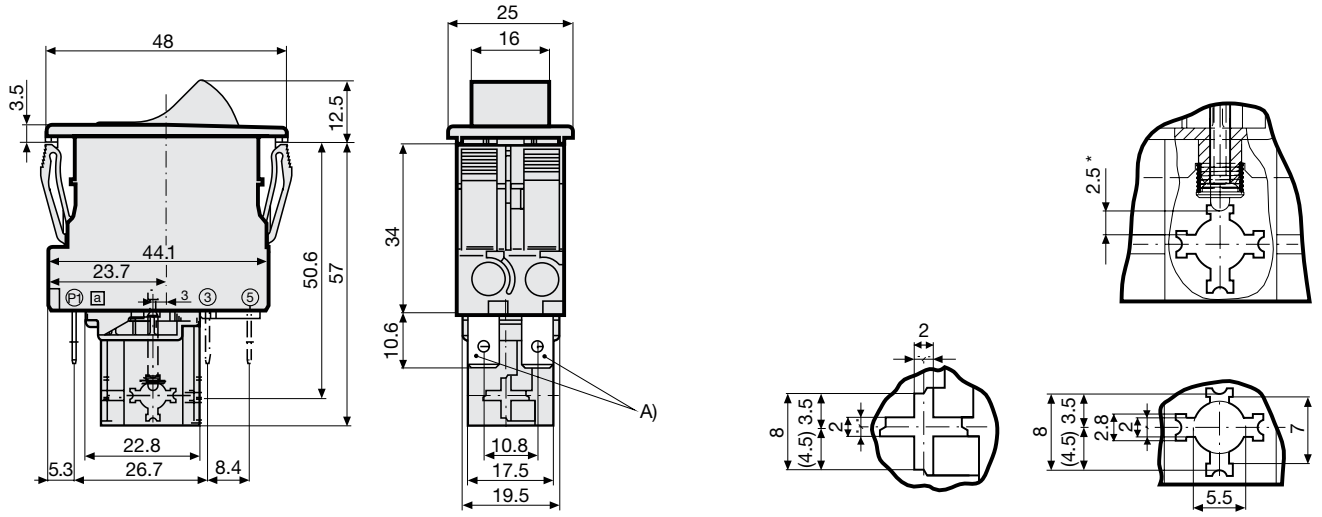

A) Quick connect terminal, IEC 61210, A6.3-0.8 mm
*) max. switching stroke

Mechanical lock-out latch with auxiliary contact

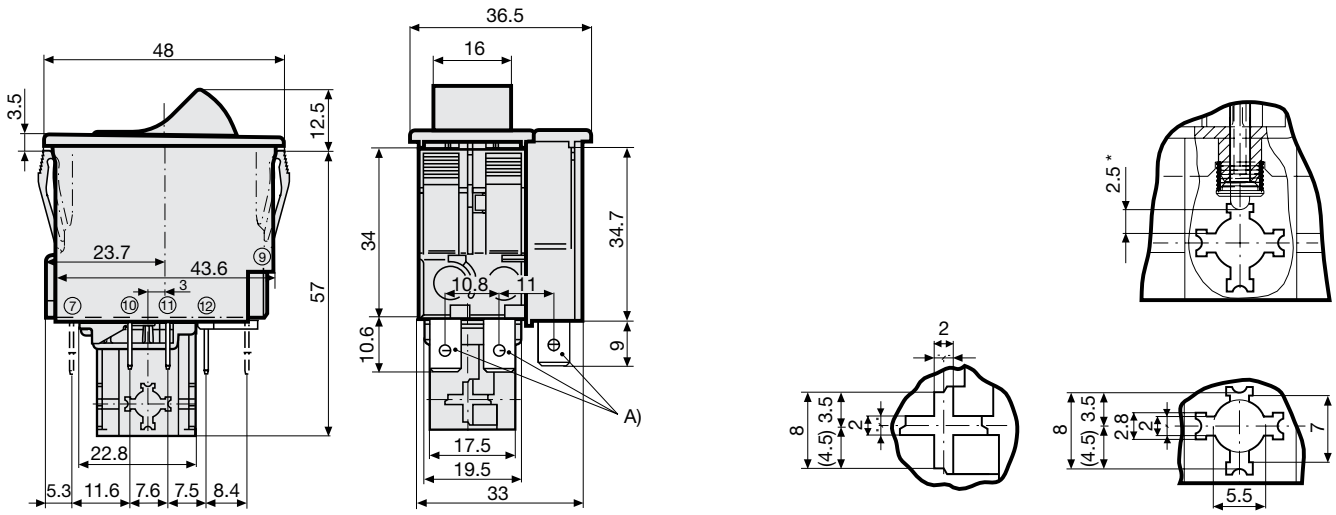

A) Quick connect terminal, IEC 61210, A6.3-0.8 mm
*) max. switching stroke

Accessories / factory mounted
AZM01 / Collar with cover, IP54

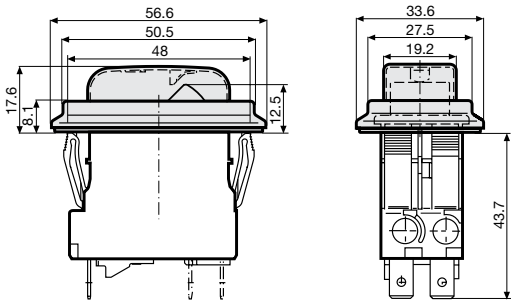

AZM02 / Raised collar with cover, narrow, IP54
AZM03 / Raised collar, IP40

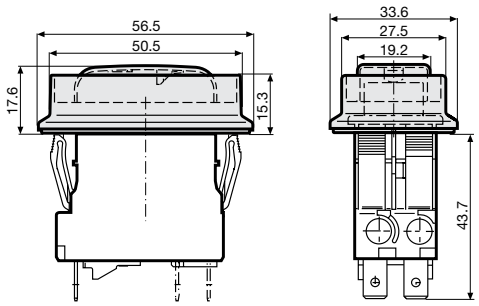

AZM10 / Collar with cover, narrow, IP54

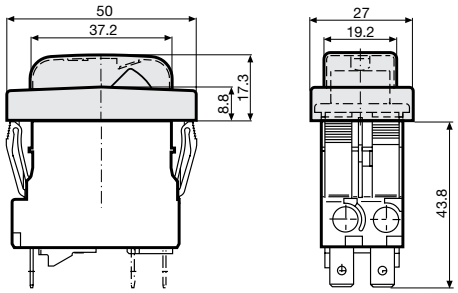

AZM11 / Partially raised collar with cover, narrow, IP54
AZM12 / Partially raised collar without cover, narrow, IP40

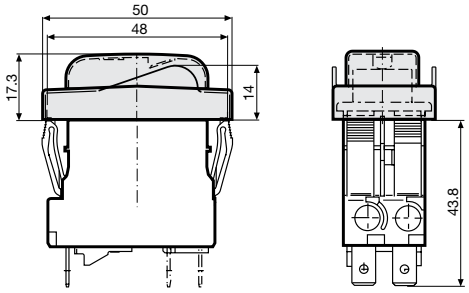

AZM13 / Raised collar narrow, IP40

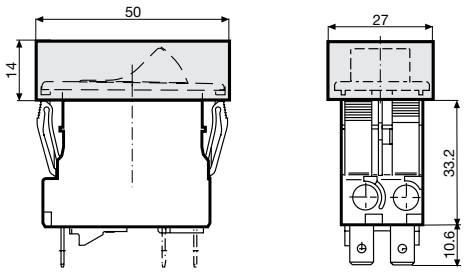

AZM14 / Raised collar with cover narrow, IP54

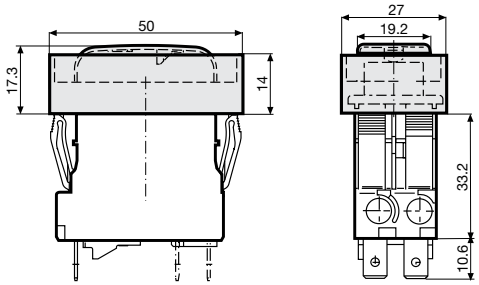

Cut-out and pin-out

Cut-out snap-in type
Basic type

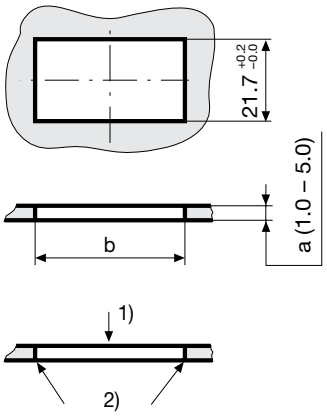

a	b
1.0	44,5...45,0
1.5	44,5...45,0
2.0	44,7...45,2
2.5	44,7...45,2
3.0	44,8...45,3
4.0	44,9...45,4
5.0	45,0...45,5

1) Assemble
2) edge must be sharp

Cut-out snap-in type
With auxiliary contact

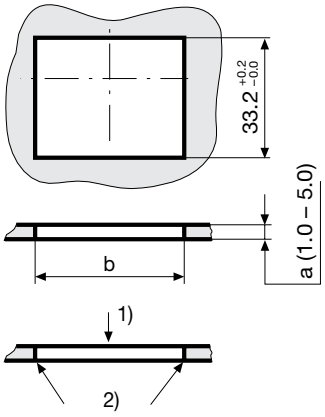

a	b
1.0	44,5...45,0
1.5	44,5...45,0
2.0	44,7...45,2
2.5	44,7...45,2
3.0	44,8...45,3
4.0	44,9...45,4
5.0	45,0...45,5

1) Assemble
2) edge must be sharp

Pin-out
Basic type

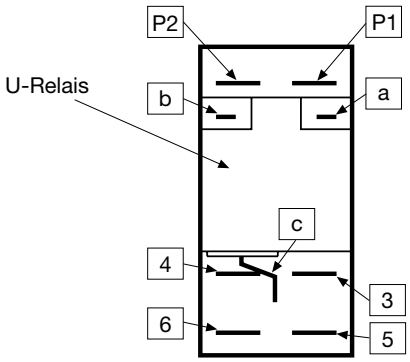

Pin-out
With auxiliary contact

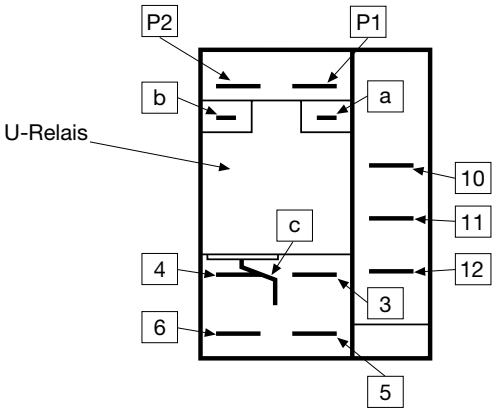

Time-Current-Curves

Rated Current In <3 A

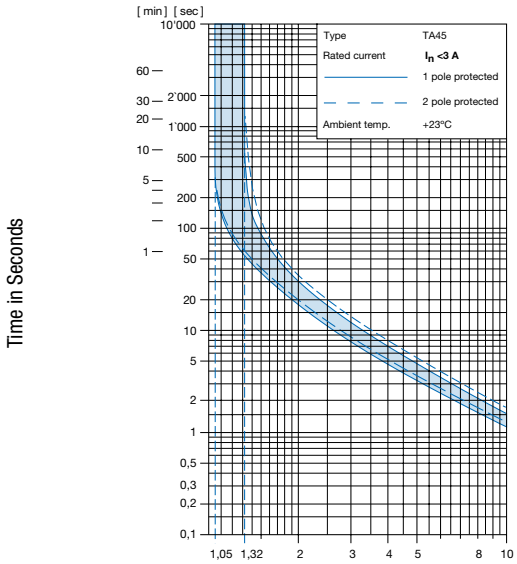

Ambient temperature +23°

Rated Current 3 A ≥ In <18 A

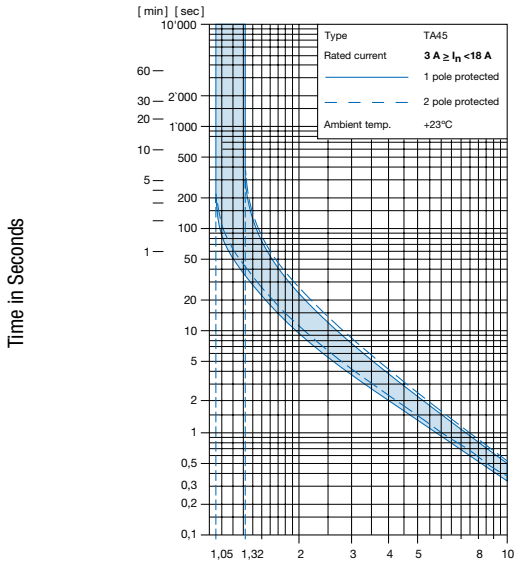

Ambient temperature +23°

Rated Current In ≥18 A

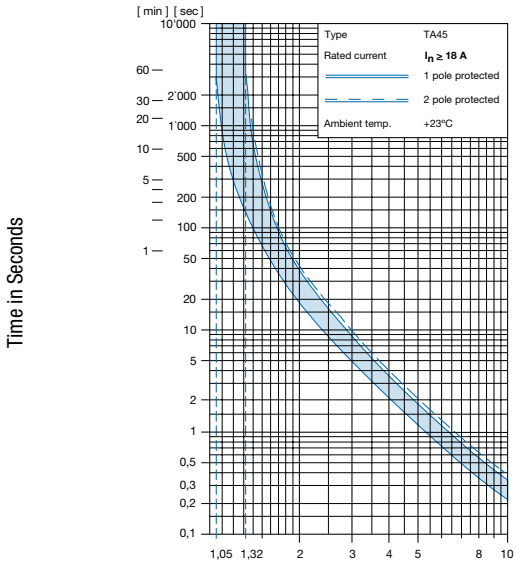

Ambient temperature +23°

Effect of ambient temperature

The units are calibrated for an ambient temperature of +23°C. To determine the rated current for a lower or higher ambient temperature, use a correction factor (typical value) from the table below:

Ambient Temperature [°C]	Correction factor
-10	0.89
-5	0.91
0	0.92
+23	1.00
+30	1.03
+40	1.08
+55	1.16

Example: With a nominal current of 5A and an ambient temperature of 40°C, a correction factor of 1.08 results. This results in a nominal current of 5.5 A, which is rounded up to the next higher nominal current 6 A.

Auxiliary contact (changeover)

Rated Voltage	28 VDC	60 VDC	240 VAC
Rated current	max. 10 A resistive load	max. 2 A resistive load	max. 2 A cos φ 0.7

Undervoltage release

Max. operating voltage						1.1 Ue
Rated operating voltage Ue	5 V	12 V	24 V	48 V	120 V	240 V
Current consumption (± 10%)	10.5 mA	16.5 mA	17.0 mA	3.2 mA	3.7 mA	3.1 mA
Highest reset level	0.85 Ue	0.85 Ue	0.85 Ue	0.85 Ue	0.85 Ue	0.85 Ue
Lowest trip level	0.20 Ue	0.20 Ue	0.20 Ue	0.20 Ue	0.20 Ue	0.20 Ue
Trip delay	20 ms - 50 ms	20 ms - 50 ms	20 ms - 50 ms	20 ms - 50 ms	20 ms - 50 ms	20 ms - 50 ms
Impulse withstand voltage (1.2 / 50 µs)	≥4 kV	≥4 kV	≥4 kV	≥4 kV	≥4 kV	≥4 kV

Remote trip

Permissible impuls duration of the make contact (no)	Between terminal C and P1	unlimited
Electrical load of the make contact (no)	Current max. 12 mA / power max. 1.1 W	

T	A	4	5	-	A	B	T	W	F	2	0	0	U	2	-	7	0	1	-	A	Z	M	0	1
					1			2	3	4			5			6*				7*				

* These characters are omitted for standard products and serve as placeholder for customised applications.

Basic function 1

			1 pole thermal overload protection							
Auxiliary contact (changeover contact)					•		•			
Shunt terminal				•			•			
Schematic drawing			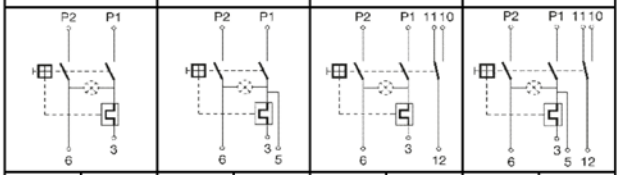							
Terminal type	Quick connect terminal		•		•		•		•	
	Screw terminal (lineside P1,P2)			•		•		•		•
Snap-in type			•	•	•	•	•	•	•	•
ON/OFF switch	Without illumination		ABT	AHT	ABF	AHF	APT	AST	APF	ASF
	With illumination	220V…240V	A12	A62	A22	A72	AL2	A2L	AM2	A2M
		110V…120V	A14	A64	A24	A74	AL4	A4L	AM4	A4M
		20V…26V	A17	A67	A27	A77	AL7	A7L	AM7	A7M
		10V…13V	A18	A68	A28	A78	AL8	A8L	AM8	A8M
		4V…7V	A19	A69	A29	A79	AL9	A9L	AM9	A9M
Impulse switch			AET	AJT	AEF	AJF	ART	AUT	ARF	AUF

			2 pole thermal overload protection							
Auxiliary contact (changeover contact)					•		•			
Shunt terminal				•			•			
Schematic drawing			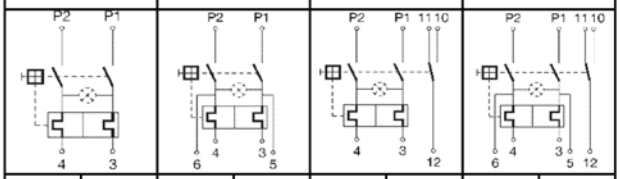							
Terminal type	Quick connect terminal		•		•		•		•	
	Screw terminal (lineside P1,P2)			•		•		•		•
Snap-in type			•	•	•	•	•	•	•	•
ON/OFF switch	Without illumination		ABD	AHD	ABG	AHG	APD	ASD	APG	ASG
	With illumination	220V…240V	A32	A82	A42	A92	AN2	A2N	AP2	A2P
		110V…120V	A34	A84	A44	A94	AN4	A4N	AP4	A4P
		20V…26V	A37	A87	A47	A97	AN7	A7N	AP7	A7P
		10V…13V	A38	A88	A48	A98	AN8	A8N	AP8	A8P
		4V…7V	A39	A89	A49	A99	AN9	A9N	AP9	A9P
Impulse switch			AED	AJD	AEG	AJG	ARD	AUD	ARG	AUG

T	A	4	5	-	A	B	T	W	F	2	0	0	U	2	-	7	0	1	-	A	Z	M	0	1
					1			2	3		4			5			6*					7*		

Front- & Actuation color

2

Front Bezel	Rocker without illumination	Rocker with illumination		
black	-	clear transparent	=	1
black	-	red transparent	=	3
black	-	green transparent	=	4
black	-	orange transparent	=	6
black	black	-	=	B
black	green	-	=	G
black	red	-	=	R
black	white	-	=	W
black	orange	-	=	X
black	yellow	-	=	Y

Rocker legend, marking

3

– o	Embossed	=	F
ON OFF	Printed white	=	H
	Printed black	=	K
– o	Printed white	=	L
	Printed black	=	M
I 0	Printed white	=	P
	Printed black	=	R
ON – o OFF	Printed white	=	S
	Printed black	=	T

Rated Current In [A]

4

Thermal overload protection

In			In			In			In		
0.05 A	=	Z05	1.4 A	=	J14	4.0 A	=	040	9.0 A	=	090
0.10 A	=	J01	1.5 A	=	J15	4.2 A	=	042	9.5 A	=	095
0.15 A	=	Z15	1.6 A	=	J16	4.4 A	=	044	10.0 A	=	100
0.20 A	=	J02	1.7 A	=	J17	4.5 A	=	045	10.5 A	=	105
0.25 A	=	Z25	1.8 A	=	J18	4.7 A	=	047	11.0 A	=	110
0.30 A	=	J03	1.9 A	=	J19	5.0 A	=	050	11.5 A	=	115
0.35 A	=	Z35	2.0 A	=	J20	5.2 A	=	052	12.0 A	=	120
0.40 A	=	J04	2.1 A	=	J21	5.5 A	=	055	12.5 A	=	125
0.45 A	=	Z45	2.2 A	=	J22	5.7 A	=	057	13.0 A	=	130
0.50 A	=	J05	2.3 A	=	J23	6.0 A	=	060	13.5 A	=	135
0.60 A	=	J06	2.5 A	=	J25	6.2 A	=	062	14.0 A	=	140
0.70 A	=	J07	2.8 A	=	J28	6.5 A	=	065	14.5 A	=	145
0.80 A	=	J08	2.9 A	=	J29	7.0 A	=	070	15.0 A	=	150
0.90 A	=	J09	3.0 A	=	030	7.1 A	=	071	16.0 A	=	160
1.00 A	=	J10	3.2 A	=	032	7.2 A	=	072	17.0 A	=	170
1.10 A	=	J11	3.5 A	=	035	7.5 A	=	075	18.0 A	=	180
1.20 A	=	J12	3.7 A	=	037	8.0 A	=	080	19.0 A	=	190
1.30 A	=	J13	3.8 A	=	038	8.5 A	=	085	20.0 A	=	200

T	A	4	5	-	A	B	T	W	F	2	0	0	U	2	-	7	0	1	-	A	Z	M	0	1
					1			2	3	4			5			6*				7*				

Undervoltage release, Remote trip release, Mechanical lock-out latch 5

Rated voltage	Undervoltage release			Remote trip release	Mechanical lock-out latch	Without release or mechanical lock-out latch
AC (V)	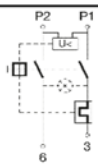	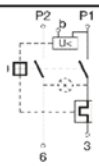	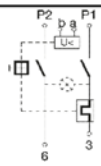	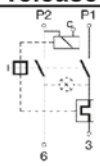	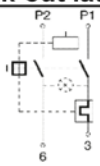	
240	U2	E2	Z2	A2	S0	C0
230	U3	E3	Z3	A3		
120	U4	E4	Z4	A4		
AC/DC (V)						
48	U6	E6	Z6	A6		
24	U7	E7	Z7	A7		
12	U8	E8	Z8	A8		
5	U9	E9	Z9			

** Schematic drawings: 1-pole protected version shown only*

Special marking 6

Standard	=	(empty)
Special marking (XXX = placehoder)	=	XXX

T	A	4	5	-	A	B	T	W	F	2	0	0	U	2	-	7	0	1	-	A	Z	M	0	1
					1			2	3		4			5			6*					7*		

Accessories, factory-mounted (optional) 7

Please note: factory-mounted accessories are only available for configurations without auxiliary contact.

Without accessory		=	(empty)
Collar with cover, IP54		=	AZM01
Raised collar with cover, IP54	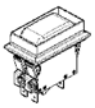	=	AZM02
Raised collar, IP40	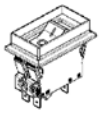	=	AZM03
Raised collar with cover narrow, IP54		=	AZM10
Partially rasied collar with cover, narrow, IP54	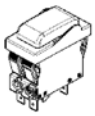	=	AZM11
Partially raised collar without cover, narrow, IP40		=	AZM12
Raised collar narrow, IP40		=	AZM13
Raised collar with cover, narrow, IP54	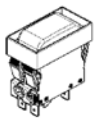	=	AZM14

Accessories

	Description
	TA45-ACC Accessories to TA45

14.04.2022

The specifications, descriptions and illustrations indicated in this document are based on current information. All content is subject to modifications and amendments. Information furnished is believed to be accurate and reliable. However, users should independently evaluate the suitability and test each product selected for their own applications.