df Electric

HORUS®
PHOTOVOLTAIC
PROTECTION

PHOTOVOLTAIC

FUSE LINKS & FUSE HOLDERS FOR PHOTOVOLTAIC APPLICATIONS

NH ST
1000V DC

PV fuse base
for NH fuse links

ST NH2

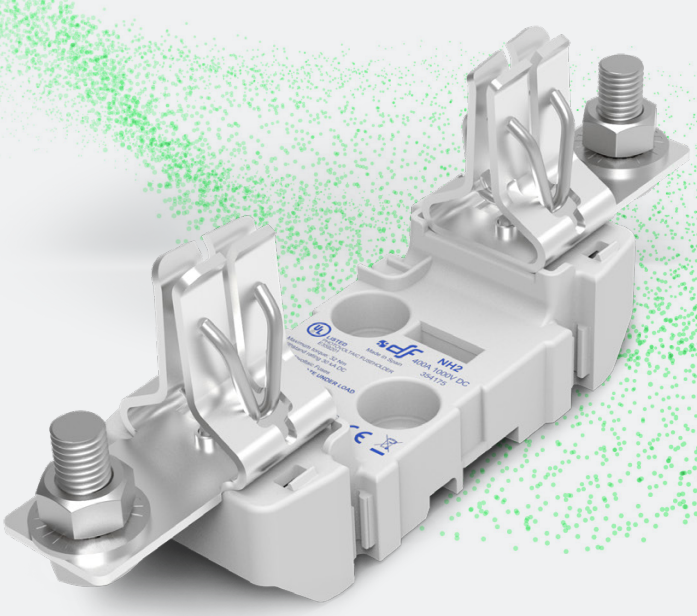

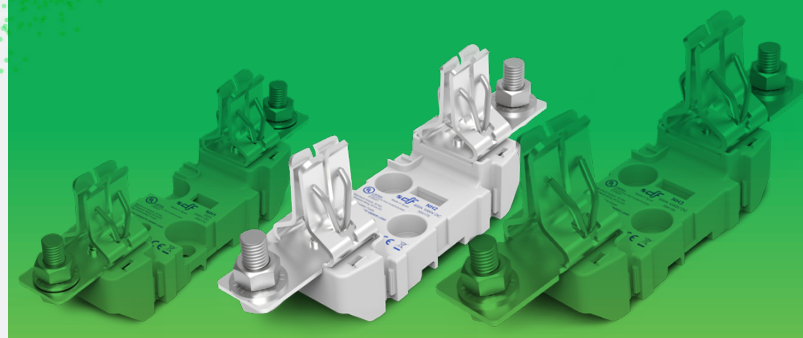

NH1 NH2 NH3

PROTECTING THE WORLD

dfelectric.es

df Electric

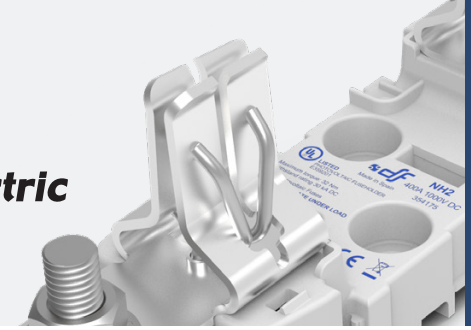

NH ST 1000V DC

PV fuse base
for NH fuse links

NH2

PHOTOVOLTAIC

HORUS PHOTOVOLTAIC PROTECTION

NH2

RATED CURRENT
400A

RATED VOLTAGE
1000V DC

MAXIMUM POWER DISSIPATION
45W

PROTECTION INDEX
IP00
IP20

STANDARDS
IEC/EN 60269-1
IEC/EN 60269-2
IEC/EN 60269-6
UL4248-1
UL4248-18

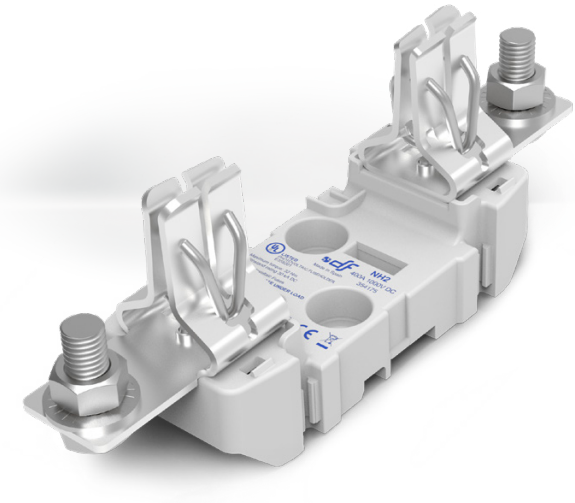

Bases for NH fuse links 1000V DC

Manufactured with a high quality materials

- Silver plated copper contacts.
- Plastic materials with high temperature resistance and self-extinguishable.
- All the materials are according to the European Directive RoHS (Restriction of the use of certain hazardous substances in electrical material).

RoHS COMPLIANT

For DIN rail mounting or with screw fixing.

Single-phase type.

Connection by screws.

Wide range of accessories that enables IP20 protection index: contact covers, fuse link covers, partition walls.

Multi-pole units can be made with connection accessories.

Manufactured according IEC and EN standards.

UL certification (File E359201)

Accessories

REFERENCE	DESCRIPTION	PACKING Uni /BOX
326250	PARTITION WALL FIXED TO SEPARATORS	2
325400	SEPARATOR MULTIPOLE UNITS SEPARATOR	2
325003	TERMINAL COVER	6
325020	FUSE LINKS COVER	3
357010	MICROSWITCH	1/12
340001	FUSE PULLER	1

TERMINALS

	CROSS SECTION (mm²)	CABLE	IP20 COMPATIBLE	
343630	240/50	1	YES	3
344630	240/95-50	2	NO	3

Range

REFERENCE	POLES	FIXING	CONNECTION	PACKING Uni /BOX
354175 UL	1P	DIN RAIL/SCREW	SCREW	1

df Electric

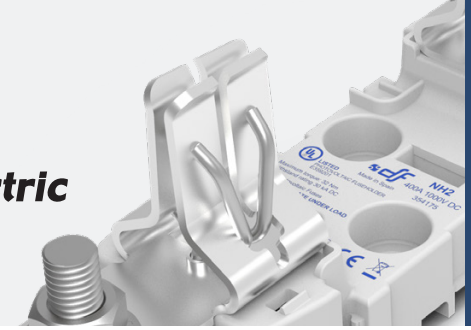

NH ST 1000V DC

PV fuse base
for NH fuse links

NH2

PHOTOVOLTAIC

HORUS PHOTOVOLTAIC PROTECTION

Technical data

Rated current	400A	
Rated voltage	1000V DC	
Maximum power dissipation	45W	
Breaking capacity	allows fuse links with breaking capacity **up to 120kA**	
Protection index	IP00 / IP20	
Ambient temperature of service	-20°C ... 70°C	
Storage temperature	-40°C ... 80°C	
Correction of the admissible current in function of the temperature	20º C	1
	30º C	0,95
	40º C	0,90
	50º C	0,80
	60º C	0,70
	70º C	0,60

DO NOT OPERATE UNDER LOAD

Materials

Contacts	Silver plated copper
Body	Thermoplastic, high resistance to temperature Flammability: (UL94) V0 Glow wire test: (IEC-60695) 960ºC
Partition walls	Thermoplastic, high resistance to temperature Flammability: (UL94) V0 NH3: Phenolic resin laminated
Separators	Thermoplastic, high resistance to temperature Flammability: (UL94) V0
Terminal covers	Thermoplastic, high resistance to temperature Flammability: (UL94) V0 Glow wire test: (IEC-60695) 960ºC
Fuse links covers	Thermoplastic, high resistance to temperature Flammability: (UL94) V2 Glow wire test: (IEC-60695) 850ºC

Standards

IEC/EN 60269-1
IEC/EN 60269-2
UL4248-1 Fuse holders
UL4248-19 Photovoltaic fuse holders

Certifications

Application characteristics

Mounting	DIN Rail / Screws
Connecting wire	M12
Maximum tightening torque on terminals	32 Nm
Maximum tightening torque fuse holder fixation with screws	12 Nm
Multipolar assembly	▸FIG. 1
Partition walls	If several fuseholders are installed near each other in row, it will be necessary to use partition walls or to separate them **8mm as minimum**

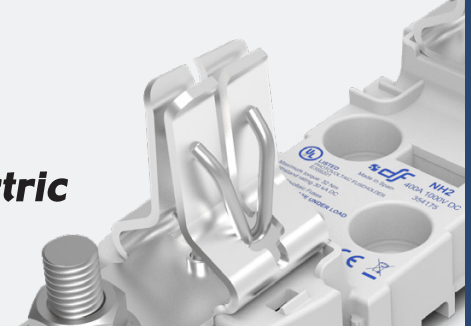

NH ST 1000V DC

PV fuse base
for NH fuse links

NH2

PHOTOVOLTAIC

HORUS PHOTOVOLTAIC PROTECTION

Dimensions

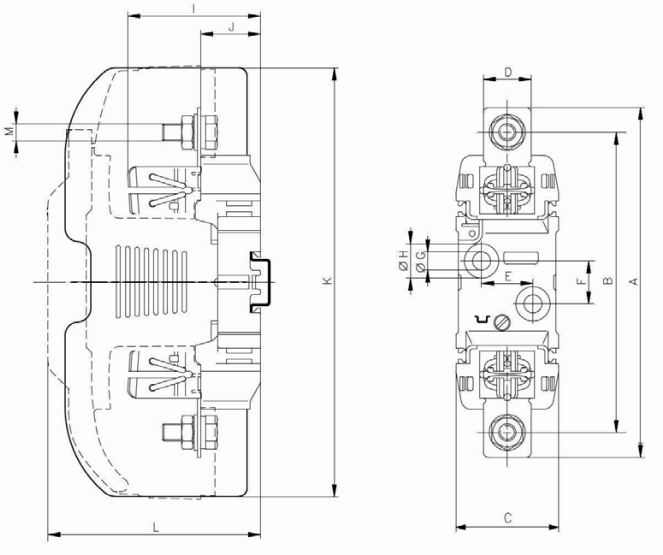

A	B	C	D	E	F	G	H	I	J	K	L	M
225	200	60	32	30	25	10,5	20	88	35	250	123	M12

Weight

1P	509gr

Weight without packing

Accessories assembly

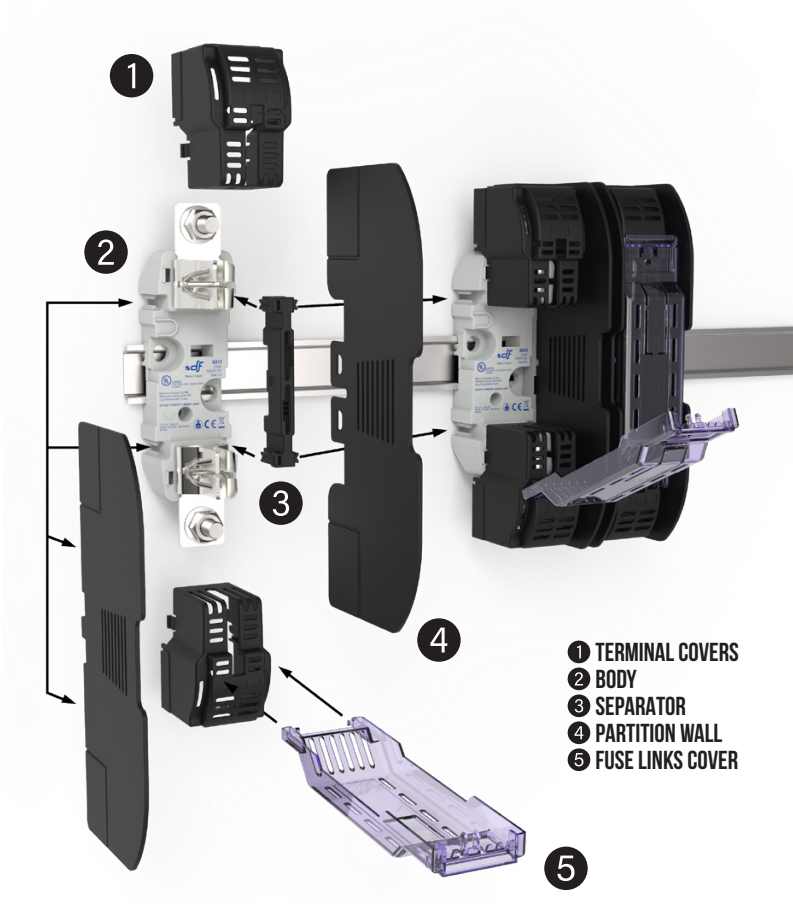

The fuse holder allows using simultaneously a microswitch for NH fuse links and IP20 protection accessories

PROTECTING THE WORLD

HEAD OFFICE AND FACTORY
SILICI, 67-69
08940 CORNELLA DE LLOBREGAT
BARCELONA · SPAIN
Tel. +34 93 377 85 85
Fax +34 93 377 82 82

INTERNATIONAL SALES
Tel. +34 93 475 08 64
Fax +34 93 480 07 75
export@dfelectric.es

NATIONAL SALES
Tel. 93 475 08 64
Fax 93 480 07 76
comercial@dfelectric.es

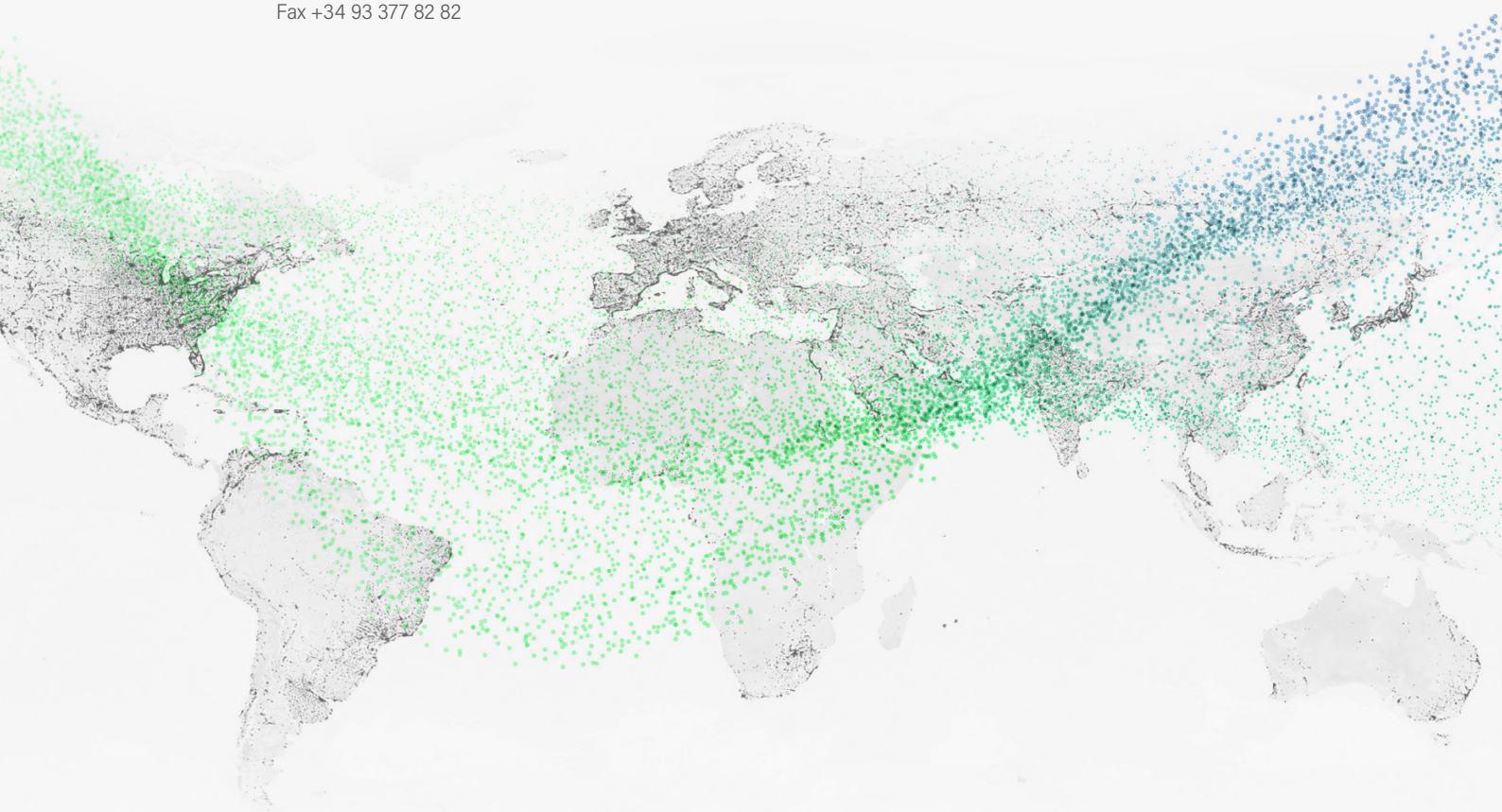

dfelectric.es

FABRICADO EN ESPAÑA · MADE IN SPAIN

According to the waste of electrical and electronic equipment directive, electrical material should not be part of the usual waste. This symbol alerts users that these products should be recycled according to local environmental waste disposal regulations.

The "electro technical expert" logo marked on the products included in this data sheet indicates that the installation of these products must be carried out by expert personnel with specialized knowledge.

To prevent electrical hazards, carry out the installation without voltage.

Safety notice
Please capture the following QR code and read our safety notice carefully before installing our products.

The data reflected in this technical record are subject to the correct installation of the product in accordance with manufacturer's instructions, relevant installation standards and professional practices, maintained and used in applications for which they were made.

The products described in this document have been designed, developed and tested in accordance with specific standard. They are considered components that are integrated as part of installation, machine or equipment. The correct general operation of the referred product is responsibility of the manufacturer of the installation, machine or equipment.

DF ELECTRIC cannot guarantee the characteristics of an installation, machine or equipment that has been designed by a third party. Once a product has been selected, the user must verify that it is appropriate for its application, through the verifications and/or tests that it deems appropriate.

DF ELECTRIC retains the right to change the dimensions, specifications, materials or design of its products at any time with or without notice.

©2025 DF Electric. All rights reserved