Data Sheet

500 kHz / 1 MHz Precision LCR Meter
Models 894 & 895

Industry-Leading Performance

The 894 and 895 are high accuracy LCR meters capable of measuring inductance, capacitance, and resistance of components and materials at DC or from 20 Hz to 500 kHz or 1 MHz respectively. These LCR meters provide flexible AC and DC test signal configuration. AC test signal voltage is variable from 5 mVrms to 2 Vrms, the AC current is adjustable up to 66.7 mArms, depending on the AC impedance selected, and a DC bias signal can be added. The vivid 4.3-inch TFT LCD offers a clear view of all measured and setting values along with BIN sorting comparator results and a handy Zoom feature that enlarges the measured values to full screen. With a basic accuracy of 0.05%, auto level control (ALC), open / short / load correction and cable length compensation, these meter are perfect tools for R&D, manufacturing and quality control applications.

DC Biasing

Both the 894 and 895 feature a DC bias source which allows the meter to apply a DC signal to the device under test to simulate in-circuit conditions.

DC biasing is commonly used to measure capacitance of ceramic, MLCC, polyester and other capacitors with high dielectric constants. These type of capacitors exhibit a significant change in capacitance with a DC voltage applied. By controlling the DC voltage, users can obtain a more deterministic measurement result. Other applications include evaluation of cored-inductors and junction capacitance of semiconductor devices.

The DC bias source is adjustable from -5V to +5V / -50 mA to +50 mA. Additionally the voltage or current levels can be swept while logging the resulting capacitance.

Features & Benefits

- AC test signal voltage adjustable up to 2 Vrms
- 3 AC current ranges, selectable via 30 Ω, 50 Ω or 100 Ω internal AC impedance. The 30 Ω setting provides up to 66.7 mArms of drive current, sufficient for larger inductors and transformers.
- Built-in DC bias source adjustable from -5V to +5V / -50 mA to +50 mA
- Fast measurement speed up to 13 ms/reading to increase manufacturing throughput
- Adjustable measurement speed for fast readout or better accuracy
- 201-point programmable list sweep function providing ability to sweep frequency, AC and DC bias voltage/current levels
- Auto-level control to maintain the measurement signal applied to the DUT at a constant level
- Test signal voltage and current monitoring
- BIN comparator function to sort components in up to 10 bin locations
- Handler interface for easy integration with a component handler
- 1 meter cable compensation
- 4-terminal fixture and Kelvin clip test leads included
- Transformer test function with optional transformer test fixture TL89T1
- Versatile trigger functionality (internal, external, bus and manual)
- Standard USB, LAN, and GPIB (895 only) interface for remote control using SCPI commands

Model	894	895
Measurement parameters	L, C, R, G, X, Z, Y, B, θ, Q, D, DCR	
Basic accuracy	0.05%	
DCR measurement range	0.01 Ω - 100 MΩ	
Test frequency range	20 Hz - 500 kHz	20 Hz - 1 MHz

Technical data subject to change
© B&K Precision Corp. 2020

www.bkprecision.com

sales@prom-elec.com / ООО ПРОМЭЛЕКТРОНИКА

Front panel

USB host port
Connect your USB flash drive to conveniently save and recall measurement data logs, settings, and screenshots.

4.3" TFT high resolution color display

Intuitive user interface
Easily change test parameters using the menu-driven front panel keypad.

Pass/Fail LED indicators

Built-in DC bias source

Zoom display mode

Enlarge the displayed values for easy viewing with a touch of a button. The voltage and current across the DUT are also monitored in zoom display mode.

Variable test signals
The instrument provides settable voltage levels from 5 mVrms to 2 Vrms to evaluate your DUT.

Rear panel

LAN interface **USB interface** **RS232 interface** **GPIB interface** (Model 895 only) **AC input**

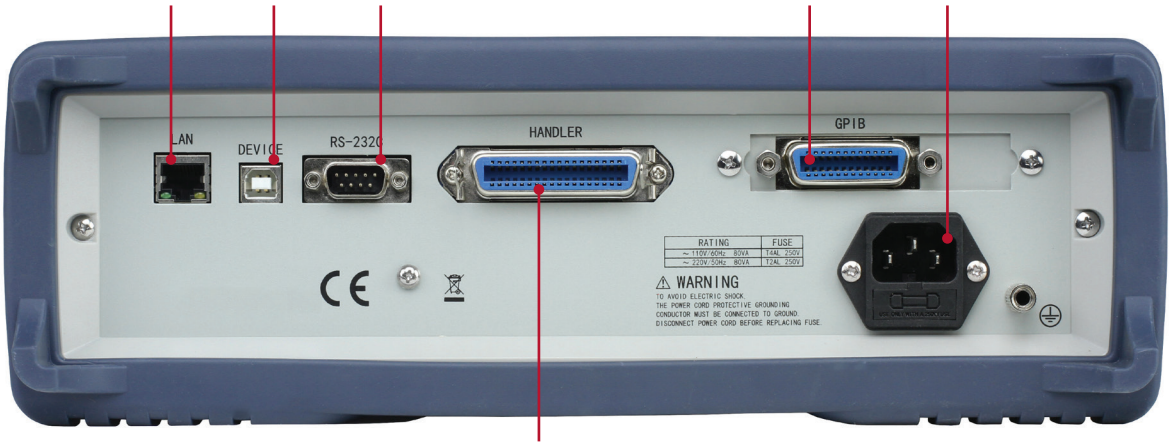

Handler interface
36-pin connector to interface with component handler via input/output control signals. Includes bin and list sweep comparator results and end of measurement (EOM) indicator output signals, external trigger, and key lock input signal.

Powerful Features

Programmable List sweep

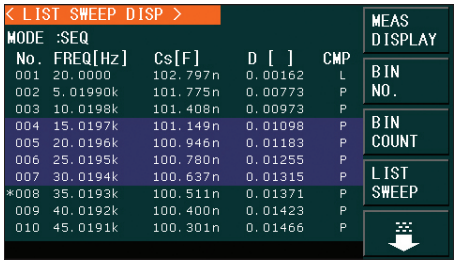

Use the built-in linear and logarithmic sweep function, supporting up to 201 sweep points, to conveniently display, analyze and store primary and secondary parameters of a component. Sweep test frequency, AC source voltage and current levels, DC bias source voltage and current levels. A delay can be programmed after each sweep point. The list sweep can be triggered internally, manually or externally and executed in sequence or step mode.

Bin sorting function

Quickly sort components using the instrument's 9 primary BINs, a secondary BIN and out-of-specification BIN. The results can be displayed in a table on-screen or output via the handler interface. High and low limits for each bin can be set up in absolute, tolerance or sequential mode with Pass/Fail indicator.

Remote PC control

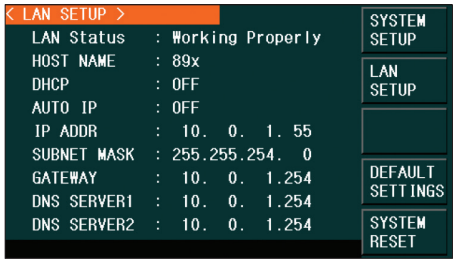

Integrate your LCR meter into an automated test system and control it from a PC using SCPI commands via the RS232, USB, LAN, or GPIB (895 only) interface.

Transformer measurements (optional)

Using optional test fixture TL89T1, the 894 and 895 can test the primary and secondary inductance L1, L2, turn ratio (N, 1/N), mutual inductance (M), and primary and secondary direct-current resistance (R2) of a transformer directly. Additionally, the two common transformer parameters winding equivalent capacitance C_o and leakage inductance L_k can be characterized indirectly.

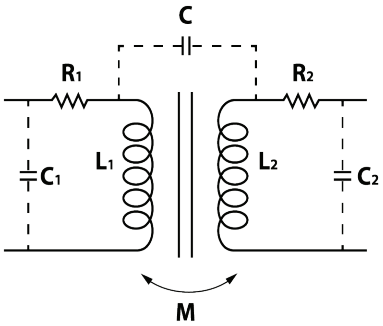

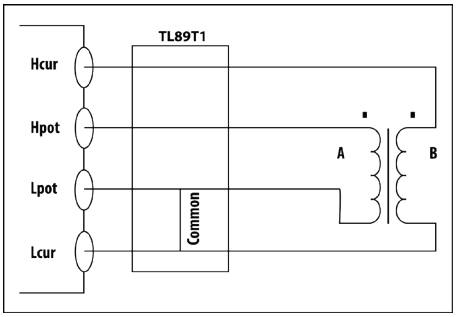

Diagram showing the TL89T1 connected to a transformer under test.

Flexible test accessories

Standard accessories shipped with each unit are Kelvin clip test leads for 4-wire measurements, a test fixture, and shorting bar. The optional transformer test fixture allows users to measure transformer parameters.

Included

Kelvin clips

Test fixture

Shorting bar

Optional

SMD test fixture (TL89S1)

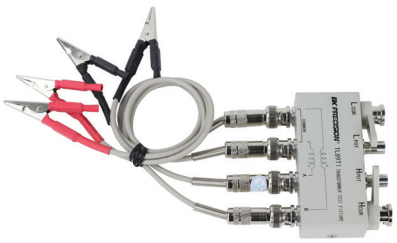

Transformer test fixture (TL89T1)

Specifications

Valid after 30 minutes of warm up time, operating at 23 °C ± 5 °C

Test Signal Frequency			
Model	**Range**	**Minimum resolution**	**Accuracy**
894	20 Hz - 500 kHz	0.01 Hz	0.01 %
895	20 Hz - 1 MHz		

Test Signal Levels		
AC source (ALC* OFF)		
Voltage Accuracy		10% x set voltage ± 2mV
Voltage Level		**Resolution**
5 mVrms - 100 mVrms		100 µVrms
100 mVrms - 1 Vrms		1 mVrms
1 Vrms - 2 Vrms		10 mVrms
Current Accuracy		10 % x set current ± 10 µA
Current Range		**Impedance**
166.7 µArms - 66.7 mArms		30 Ω
100.0 µArms - 40.0 mArms		50 Ω
50.0 µArms - 20.0 mArms		100 Ω
AC source (ALC* ON)[1]		
Voltage	Range	10 mVrms – 1 Vrms
	Accuracy	6% x set voltage ± 2 mV
Current	Range	100 µArms - 10 mArms
	Accuracy	6 % x set current ± 10 µA
DC bias source		
Voltage	Range	-5 V to +5 V
	Accuracy	1 % x set voltage ± 5 mV
	Resolution	0.01 mV
Current	Range	-50 mA to +50 mA
	Accuracy	1 % x set current ± 50 µA
	Resolution	0. 1 µA

*Auto Level Control
1: Resolution and impedance see AC source (ALC OFF) specification

Measurements		
Measurement parameters		L, C, R, G, X, Z, Y, B, θ, Q, D, DCR
Transformer measurement parameters[2]		L2A, L2B, N, I/N, M
Basic accuracy		0.05 %
AC source Output impedance (± 2%)		30 Ω, 50 Ω, 100 Ω
Typical measurement time (≥10 kHz) (excluding display refresh time)	Fast	13 ms / measurement
	Medium	67 ms / measurement
	Slow	187 ms / measurement
Equivalent circuit		Series, Parallel
Range mode		Auto, Hold
Averaging		1-255 measurements
Correction function		Open, Short and Load correction

2: Requires optional fixture TL89T1

Measurements		
Cable length compensation		0, & 1 meter
Math operations		Direct reading, ΔABS, Δ%
Trigger mode		Internal, Manual, External, Bus
Delay time setup		Time from trigger to start: 0 to 60 seconds
		Resolution: 1 ms
Comparator (Bin sorting)		10-bin sorting, primary bins BIN1-BIN9 and OUT, secondary bin AUX
		Bin counter: 0 to 999,999
		PASS/FAIL indication via front panel LED or handler interface signal
List sweep	201 sweep points	Sweep test frequency, test signal AC voltage, test signal AC current, test signal DC bias voltage and test signal DC bias current
	Measurement parameters	Primary and secondary
	Sweep modes	Linear or logarithmic
	Trigger mode	Sequential and Step
	Comparator	One pair of lower and upper limits for primary or secondary parameter (user selectable)
Internal non-volatile memory		Save / recall 40 setups

General		
External USB memory		Save / recall setups, screenshots, measurements and sweep data logs
Remote interface		USB (USBTMC or virtual COM), RS232, LAN, GPIB (895 only)
Handler interface		36-pin connector
AC input	Voltage	110/220 VAC ±10%
	Frequency	47 – 63 Hz
Power consumption		Max. 80 VA
Operating temperature		0 °C to 40 °C
Storage temperature		-10 °C to 70 °C
Relative humidity		Up to 80%
Display		4.3" TFT color display
Dimensions (WxHxD)		without bezel: 280 mm × 88 mm × 370 mm (11.02" x 3.46" x 14.56") with bezel: 369 mm × 108 mm × 408 mm (14.52" x 4.25" x 16.06")
Weight		5 kg (11 lbs)
Safety		EN61010-1:2001, EU Low Voltage Directive 2006/95/EC
Electromagnetic Compatibility		Meets EMC Directive 2004/108/EC, EN61326-1:2006
Three-Year Warranty		
Standard accessories		AC power cord, 4-wire Kelvin clip test lead, 4-terminal test fixture, shorting bar, certificate of calibration, test report
Optional accessories		Transformer test fixture TL89T1

Measurement Accuracy

The chart below depicts the basic measurement accuracy under the following conditions: AC test signal level 0.5 Vrms or 1 Vrms, measurement speed Slow or Medium, cable length 0 m, DC bias OFF, Dx ≤ 0.1 or Qx ≤ 0.1 respectively. When selecting measurement speed Fast, double the accuracy value obtained from the chart.

For more detailed measurement accuracy specifications and other test conditions, refer to the user manual.

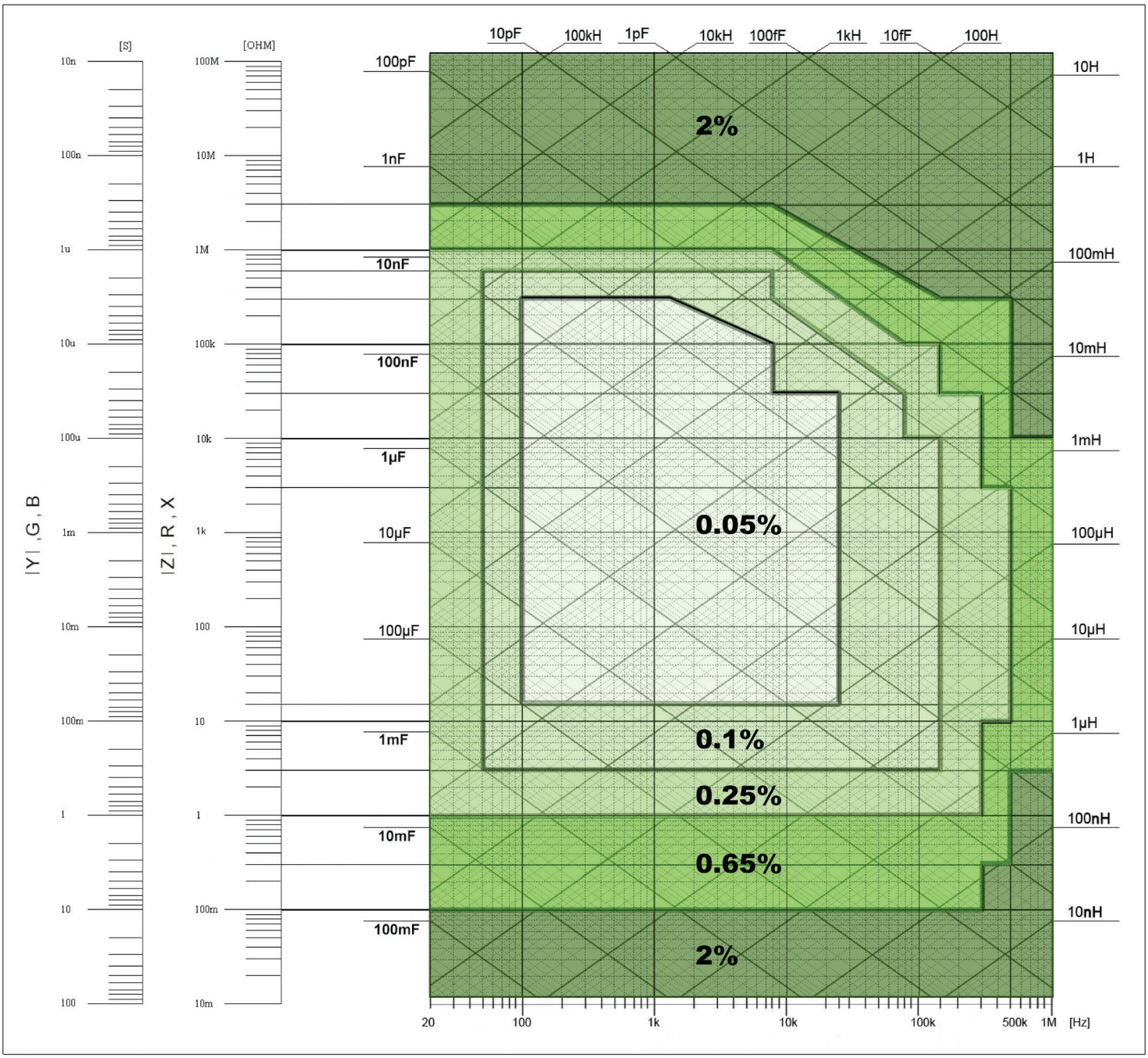

DCR Accuracy: A(1 + Rx / 5 MΩ + 16 mΩ / Rx)[%] ±0.2 mΩ A=0.25 for slow & medium speed, A=0.5 for fast speed