High Speed Optocoupler, Single and Dual, 10 MBd

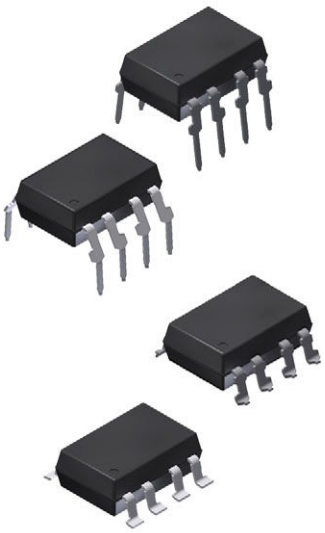

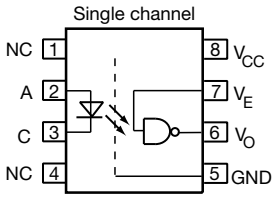

6N137, VO2601, VO2611

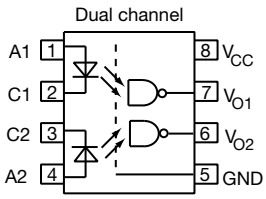

VO2630, VO2631, VO4661

FEATURES

- Choice of CMR performance of 15 kV/µs, 5 kV/µs, and 1000 V/µs
- High speed: 10 MBd typical
- +5 V CMOS compatibility
- Pure tin leads
- Guaranteed AC and DC performance over temperature
- Meets IEC 60068-2-42 (SO_2) and IEC 60068-2-43 (H_2S) requirements
- Low input current capability of 5 mA
- Material categorization: for definitions of compliance please see www.vishay.com/doc?99912

Pb-free
e3
RoHS COMPLIANT

APPLICATIONS

- Microprocessor system interface
- PLC, ATE input / output isolation
- Computer peripheral interface
- Digital fieldbus isolation: CC-link, DeviceNet, profibus, SDS
- High speed A/D and D/A conversion
- AC plasma display panel level shifting
- Multiplexed data transmission
- Digital control power supply
- Ground loop elimination, noise isolation

AGENCY APPROVALS

- UL1577
- cUL
- DIN EN 60747-5-5 (VDE 0884-5) available with option 1
- BS EN 60950-1
- CQC GB8898-2011, GB4943.1-2011

DESCRIPTION

The 6N137, VO2601, and VO2611 are single channel 10 MBd optocouplers utilizing a high efficient input LED coupled with an integrated optical photodiode IC detector. The detector has an open drain NMOS-transistor output, providing less leakage compared to an open collector Schottky clamped transistor output. The VO2630, VO2631, and VO4661 are dual channel 10 MBd optocouplers. For the single channel type, an enable function on pin 7 allows the detector to be strobed. The internal shield provides a guaranteed common mode transient immunity of 5 kV/µs for the VO2601 and VO2631 and 15 kV/µs for the VO2611 and VO4661. The use of a 0.1 µF bypass capacitor connected between pin 5 and 8 is recommended.

ORDERING INFORMATION

V	O	2	6	0	1	-	X	0	#	#	T
PART NUMBER							PACKAGE OPTION				TAPE AND REEL

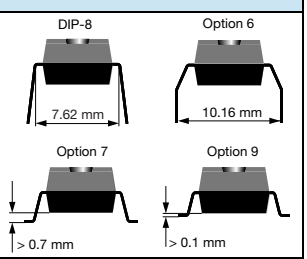

AGENCY CERTIFIED/PACKAGE	CHANNELS 1			CHANNELS 2		
	CMR (V/µs)			CMR (V/µs)		
BSI, UL, cUL	**1000**	**5000**	**15 000**	**1000**	**5000**	**15 000**
DIP-8	6N137	VO2601	VO2611	VO2630	VO2631	VO4661
DIP-8, 400 mil (option 6)	6N137-X006	VO2601-X006	VO2611-X006	VO2630-X006	VO2631-X006	VO4661-X006
SMD-8 (option 7)	6N137-X007T	VO2601-X007T	VO2611-X007T	VO2630-X007T	VO2631-X007T	VO4661-X007T
SMD-8 (option 9)	6N137-X009T	-	-	VO2630-X009T	-	-
VDE, BSI, UL, cUL	**1000**	**5000**	**15 000**	**1000**	**5000**	**15 000**
DIP-8, 400 mil (option 6)	-	VO2601-X016	VO2611-X016	-	VO2631-X016	-
SMD-8 (option 7)	-	VO2601-X017T	VO2611-X017T	-	VO2631-X017T	-

For technical questions, contact: optocoupleranswers@vishay.com
THIS DOCUMENT IS SUBJECT TO CHANGE WITHOUT NOTICE. THE PRODUCTS DESCRIBED HEREIN AND THIS DOCUMENT ARE SUBJECT TO SPECIFIC DISCLAIMERS, SET FORTH AT www.vishay.com/doc?91000

sales@prom-elec.com / ООО ПРОМЭЛЕКТРОНИКА

TRUTH TABLE (positive logic)		
LED	**ENABLE**	**OUTPUT**
On	H	L
Off	H	H
On	L	H
Off	L	H
On	NC	L
Off	NC	H

ABSOLUTE MAXIMUM RATINGS (T_{amb} = 25 °C, unless otherwise specified)				
PARAMETER	**CONDITIONS**	**SYMBOL**	**VALUE**	**UNIT**
INPUT				
Average forward current (single channel)		I_F	20	mA
Average forward current (per channel for dual channel)		I_F	15	mA
Reverse input voltage		V_R	5	V
Enable input voltage		V_E	V_{CC} + 0.5 V	V
Enable input current		I_E	5	mA
Surge current	t = 100 µs	I_{FSM}	200	mA
Output power dissipation (single channel)		P_{diss}	35	mW
Output power dissipation (per channel for dual channel)		P_{diss}	25	mW
OUTPUT				
Supply voltage	1 min maximum	V_{CC}	7	V
Output current		I_O	50	mA
Output voltage		V_O	7	V
Output power dissipation (single channel)		P_{diss}	85	mW
Output power dissipation (per channel for dual channel)		P_{diss}	60	mW
COUPLER				
Storage temperature		T_{stg}	-55 to +150	°C
Operating temperature		T_{amb}	-40 to +100	°C
Lead solder temperature	for 10 s		260	°C
Solder reflow temperature			260	°C

Note

- Stresses in excess of the absolute maximum ratings can cause permanent damage to the device. Functional operation of the device is not implied at these or any other conditions in excess of those given in the operational sections of this document. Exposure to absolute maximum ratings for extended periods of the time can adversely affect reliability.

For technical questions, contact: optocoupleranswers@vishay.com
THIS DOCUMENT IS SUBJECT TO CHANGE WITHOUT NOTICE. THE PRODUCTS DESCRIBED HEREIN AND THIS DOCUMENT ARE SUBJECT TO SPECIFIC DISCLAIMERS, SET FORTH AT www.vishay.com/doc?91000

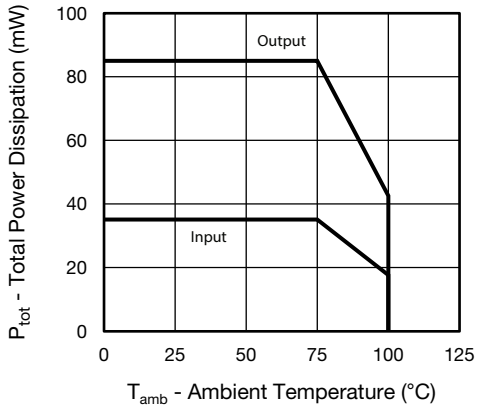

Fig. 1 - Total Power Dissipation vs. Ambient Temperature (single channel)

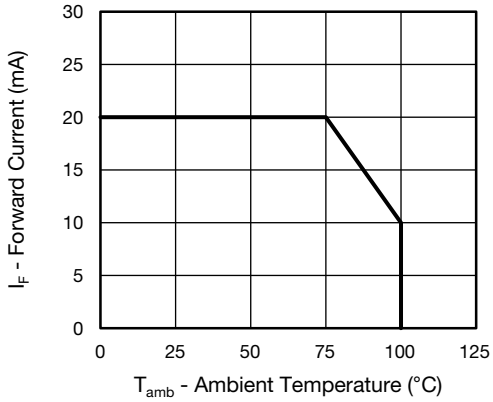

Fig. 3 - Forward Current vs. Ambient Temperature (single channel)

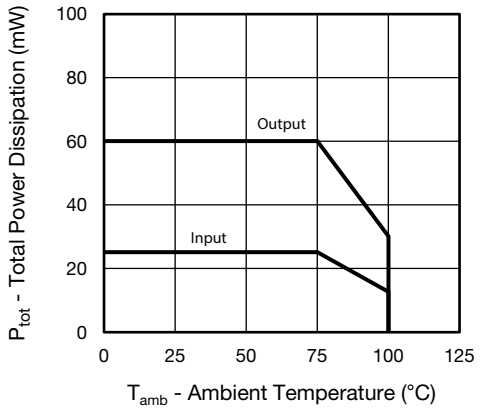

Fig. 2 - Total Power Dissipation vs. Ambient Temperature (dual channel)

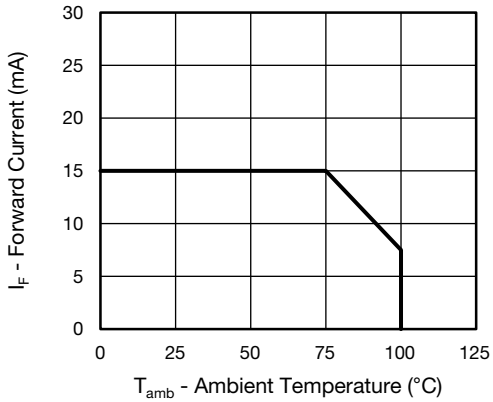

Fig. 4 - Forward Current vs. Ambient Temperature (dual channel)

RECOMMENDED OPERATING CONDITIONS					
PARAMETER	**TEST CONDITION**	**SYMBOL**	**MIN.**	**MAX.**	**UNIT**
Operating temperature		T_{amb}	-40	100	°C
Supply voltage		V_{CC}	4.5	5.5	V
Input current low level		I_{FL}	0	250	µA
Input current high level		I_{FH}	5	15	mA
Logic high enable voltage		V_{EH}	2	V_{CC}	V
Logic low enable voltage		V_{EL}	0	0.8	V
Output pull up resistor		R_L	330	4K	Ω
Fanout	R_L = 1 kΩ	N	-	5	-

For technical questions, contact: optocoupleranswers@vishay.com
THIS DOCUMENT IS SUBJECT TO CHANGE WITHOUT NOTICE. THE PRODUCTS DESCRIBED HEREIN AND THIS DOCUMENT ARE SUBJECT TO SPECIFIC DISCLAIMERS, SET FORTH AT www.vishay.com/doc?91000

ELECTRICAL CHARACTERISTICS (T_{amb} = 25 °C, unless otherwise specified)						
PARAMETER	**TEST CONDITION**	**SYMBOL**	**MIN.**	**TYP.**	**MAX.**	**UNIT**
INPUT						
Input forward voltage	I_F = 10 mA	V_F	1.1	1.4	1.7	V
Reverse current	V_R = 5 V	I_R	-	0.01	10	µA
Input capacitance	f = 1 MHz, V_F = 0 V	C_I	-	55	-	pF
OUTPUT						
High level supply current (single channel)	V_E = 0.5 V, I_F = 0 mA	I_{CCH}	-	4.1	7	mA
	V_E = V_{CC}, I_F = 0 mA	I_{CCH}	-	3.3	6	mA
High level supply current (dual channel)	I_F = 0 mA	I_{CCH}	-	6.5	12	mA
Low level supply current (single channel)	V_E = 0.5 V, I_F = 10 mA	I_{CCL}	-	4	7	mA
	V_E = V_{CC}, I_F = 10 mA	I_{CCL}	-	3.3	6	mA
Low level supply current (dual channel)	I_F = 10 mA	I_{CCL}	-	6.5	12	mA
High level output current	V_E = 2 V, V_{CC} = 5.5 V, I_F = 250 µA	I_{OH}	-	0.002	1	µA
Low level output voltage	V_E = 2 V, I_F = 5 mA, I_{OL} (sinking) = 13 mA	V_{OL}	-	0.2	0.6	V
Input threshold current	V_E = 2 V, V_{CC} = 5.5 V, I_{OL} (sinking) = 13 mA	I_{TH}	-	2.4	5	mA
High level enable current	V_E = 2 V	I_{EH}	-	-0.6	-1.6	mA
Low level enable current	V_E = 0.5 V	I_{EL}	-	-0.8	-1.6	mA
High level enable voltage		V_{EH}	2	-	-	V
Low level enable voltage		V_{EL}	-	-	0.8	V

Note

- Minimum and maximum values are testing requirements. Typical values are characteristics of the device and are the result of engineering evaluation. Typical values are for information only and are not part of the testing requirements.

SWITCHING CHARACTERISTICS						
PARAMETER	**TEST CONDITION**	**SYMBOL**	**MIN.**	**TYP.**	**MAX.**	**UNIT**
Propagation delay time to high output level	R_L = 350 Ω, C_L = 15 pF	t_{PLH}	20	48	75 (1)	ns
		t_{PLH}	-	-	100	ns
Propagation delay time to low output level	R_L = 350 Ω, C_L = 15 pF	t_{PHL}	25	50	75 (1)	ns
		t_{PHL}	-	-	100	ns
Pulse width disortion	R_L = 350 Ω, C_L = 15 pF	$\lvert t_{PHL} - t_{PLH} \rvert$	-	2.9	35	ns
Propagation delay skew	R_L = 350 Ω, C_L = 15 pF	t_{PSK}	-	8	40	ns
Output rise time (10 % to 90 %)	R_L = 350 Ω, C_L = 15 pF	t_r	-	23	-	ns
Output fall time (90 % to 10 %)	R_L = 350 Ω, C_L = 15 pF	t_f	-	7	-	ns
Propagation delay time of enable from V_{EH} to V_{EL}	R_L = 350 Ω, C_L = 15 pF, V_{EL} = 0 V, V_{EH} = 3 V	t_{ELH}	-	12	-	ns
Propagation delay time of enable from V_{EL} to V_{EH}	R_L = 350 Ω, C_L = 15 pF, V_{EL} = 0 V, V_{EH} = 3 V	t_{EHL}	-	11	-	ns

Notes

- Over recommended temperature (T_{amb} = -40 °C to +100 °C), V_{CC} = 5 V, I_F = 7.5 mA unless otherwise specified. All typicals at T_{amb} = 25 °C, V_{CC} = 5 V.

(1) 75 ns applies to the 6N137 only, a JEDEC® registered specification

For technical questions, contact: optocoupleranswers@vishay.com
THIS DOCUMENT IS SUBJECT TO CHANGE WITHOUT NOTICE. THE PRODUCTS DESCRIBED HEREIN AND THIS DOCUMENT ARE SUBJECT TO SPECIFIC DISCLAIMERS, SET FORTH AT www.vishay.com/doc?91000

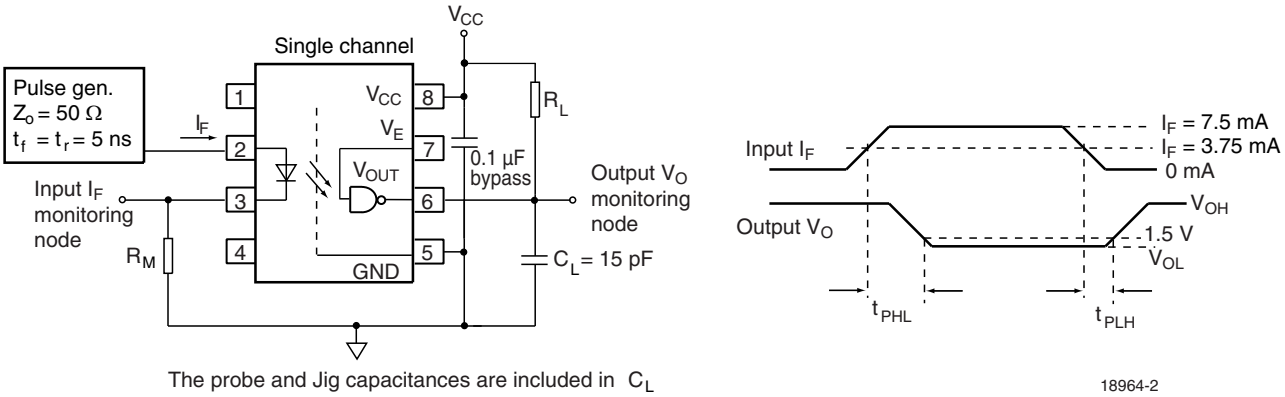

Fig. 5 - Single Channel Test Circuit for t_{PLH}, t_{PHL}, t_r and t_f

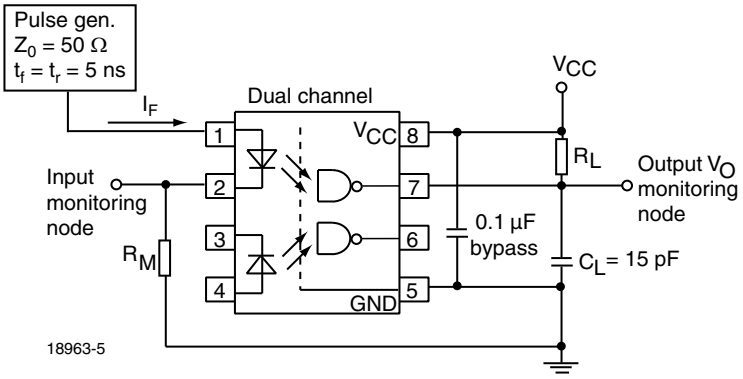

Fig. 6 - Dual Channel Test Circuit for t_{PLH}, t_{PHL}, t_r and t_f

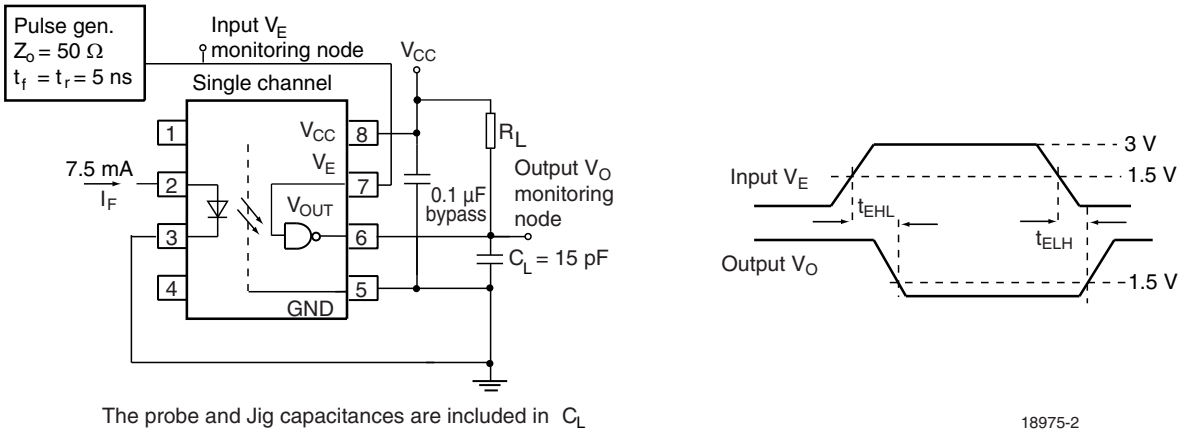

Fig. 7 - Single Channel Test Circuit for t_{EHL}, and t_{ELH}

For technical questions, contact: optocoupleranswers@vishay.com
THIS DOCUMENT IS SUBJECT TO CHANGE WITHOUT NOTICE. THE PRODUCTS DESCRIBED HEREIN AND THIS DOCUMENT ARE SUBJECT TO SPECIFIC DISCLAIMERS, SET FORTH AT www.vishay.com/doc?91000

COMMON MODE TRANSIENT IMMUNITY (T_{amb} = 25 °C, unless otherwise specified)						
PARAMETER	**TEST CONDITION**	**SYMBOL**	**MIN.**	**TYP.**	**MAX.**	**UNIT**
Common mode transient immunity	$\|V_{CM}\|$ = 10 V, V_{CC} = 5 V, I_F = 0 mA, $V_{O(min.)}$ = 2 V, R_L = 350 Ω, T_{amb} = 25 °C (1)	$\|CM_H\|$	1000			V/µs
	$\|V_{CM}\|$ = 50 V, V_{CC} = 5 V, I_F = 0 mA, $V_{O(min.)}$ = 2 V, R_L = 350 Ω, T_{amb} = 25 °C (2)	$\|CM_H\|$	5000	10 000		V/µs
	$\|V_{CM}\|$ = 1 kV, V_{CC} = 5 V, I_F = 0 mA, $V_{O(min.)}$ = 2 V, R_L = 350 Ω, T_{amb} = 25 °C (3)	$\|CM_H\|$	15 000	25 000		V/µs
	$\|V_{CM}\|$ = 10 V, V_{CC} = 5 V, I_F = 7.5 mA, $V_{O(max.)}$ = 0.8 V, R_L = 350 Ω, T_{amb} = 25 °C (1)	$\|CM_L\|$	1000			V/µs
	$\|V_{CM}\|$ = 50 V, V_{CC} = 5 V, I_F = 7.5 mA, $V_{O(max.)}$ = 0.8 V, R_L = 350 Ω, T_{amb} = 25 °C (2)	$\|CM_L\|$	5000	10 000		V/µs
	$\|V_{CM}\|$ = 1 kV, V_{CC} = 5 V, I_F = 7.5 mA, $V_{O(max.)}$ = 0.8 V, R_L = 350 Ω, T_{amb} = 25 °C (3)	$\|CM_L\|$	15 000	25 000		V/µs

Notes

(1) For 6N137 and VO2630
(2) For VO2601 and VO2631
(3) For VO2611 and VO4661

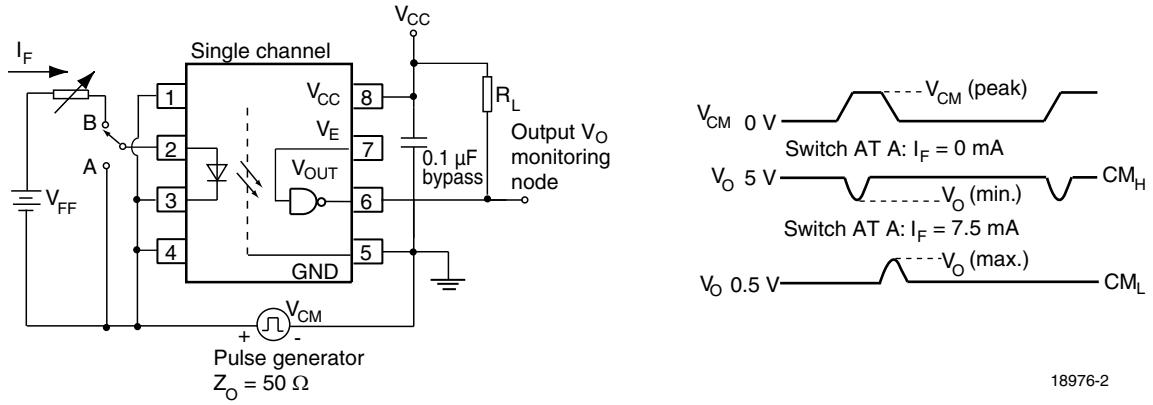

Fig. 8 - Single Channel Test Circuit for Common Mode Transient Immunity

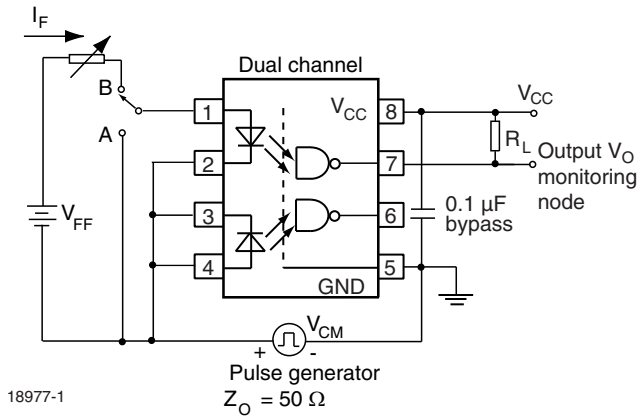

Fig. 9 - Dual Channel Test Circuit for Common Mode Transient Immunity

For technical questions, contact: optocoupleranswers@vishay.com
THIS DOCUMENT IS SUBJECT TO CHANGE WITHOUT NOTICE. THE PRODUCTS DESCRIBED HEREIN AND THIS DOCUMENT ARE SUBJECT TO SPECIFIC DISCLAIMERS, SET FORTH AT www.vishay.com/doc?91000

SAFETY AND INSULATION RATINGS				
PARAMETER	**TEST CONDITION**	**SYMBOL**	**VALUE**	**UNIT**
Climatic classification	According to IEC 68 part 1		55 / 100 / 21	
Pollution degree	According to DIN VDE 0109		2	
Comparative tracking index	Insulation group IIIa	CTI	175	
Maximum rated withstanding isolation voltage	According to UL1577, t = 1 min	V_{ISO}	5300	V_{RMS}
Maximum transient isolation voltage	According to DIN EN 60747-5-5	V_{IOTM}	8000	V_{peak}
Maximum repetitive peak isolation voltage	According to DIN EN 60747-5-5	V_{IORM}	890	V_{peak}
Isolation resistance	T_{amb} = 25 °C, V_{IO} = 500 V	R_{IO}	$\geq 10^{12}$	Ω
	T_{amb} = 100 °C, V_{IO} = 500 V	R_{IO}	$\geq 10^{11}$	Ω
Output safety power		P_{SO}	500	mW
Input safety current		I_{SI}	300	mA
Input safety temperature		T_S	175	°C
Creepage distance	DIP-8		≥ 7	mm
Clearance distance			≥ 7	mm
Creepage distance	DIP-8, 400 mil (option 6)		≥ 8	mm
Clearance distance			≥ 8	mm
Creepage distance	SMD-8 (option 7)		≥ 8	mm
Clearance distance			≥ 8	mm
Creepage distance	SMD-8 (option 9)		≥ 8	mm
Clearance distance			≥ 8	mm
Insulation thickness		DTI	≥ 0.4	mm

Note

- As per IEC 60747-5-5, § 7.4.3.8.2, this optocoupler is suitable for “safe electrical insulation” only within the safety ratings. Compliance with the safety ratings shall be ensured by means of protective circuits.

TYPICAL CHARACTERISTICS (T_{amb} = 25 °C, unless otherwise specified)

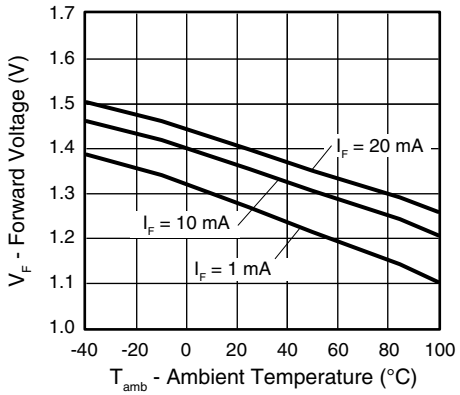

Fig. 10 - Forward Voltage vs. Ambient Temperature

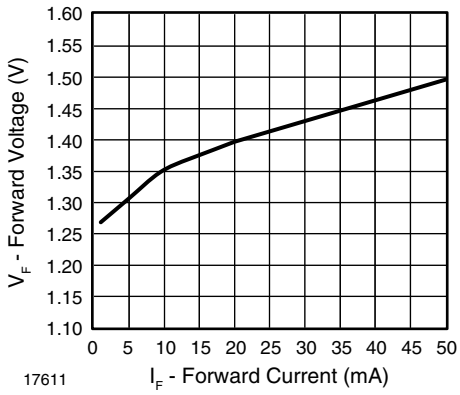

Fig. 11 - Forward Voltage vs. Forward Current

For technical questions, contact: optocoupleranswers@vishay.com
THIS DOCUMENT IS SUBJECT TO CHANGE WITHOUT NOTICE. THE PRODUCTS DESCRIBED HEREIN AND THIS DOCUMENT ARE SUBJECT TO SPECIFIC DISCLAIMERS, SET FORTH AT www.vishay.com/doc?91000

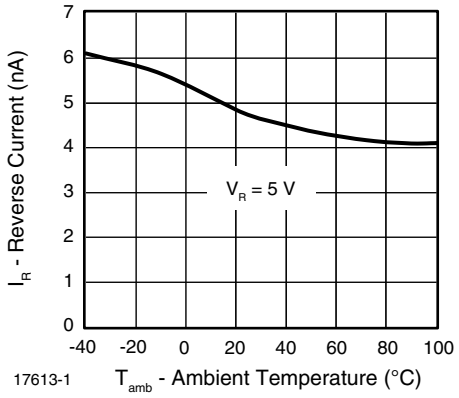

Fig. 12 - Reverse Current vs. Ambient Temperature

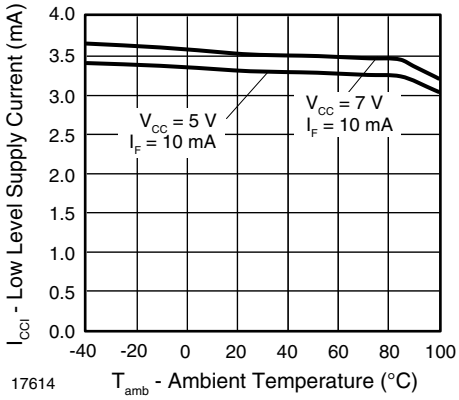

Fig. 13 - Low Level Supply Current vs. Ambient Temperature

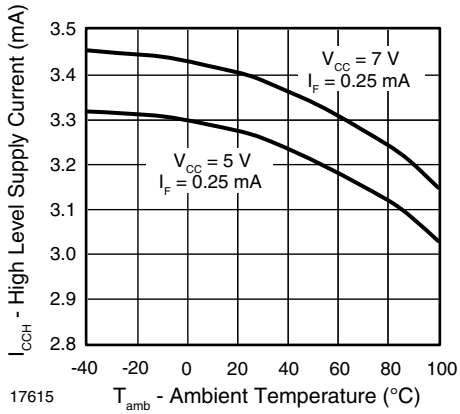

Fig. 14 - High Level Supply Current vs. Ambient Temperature

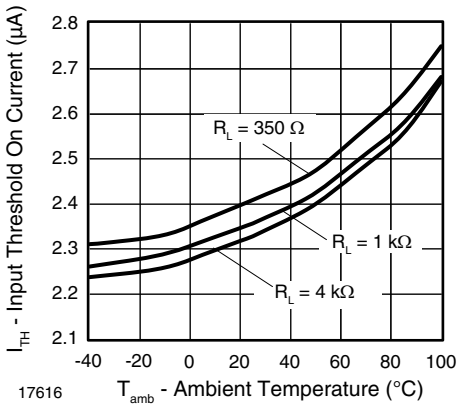

Fig. 15 - Input Threshold On Current vs. Ambient Temperature

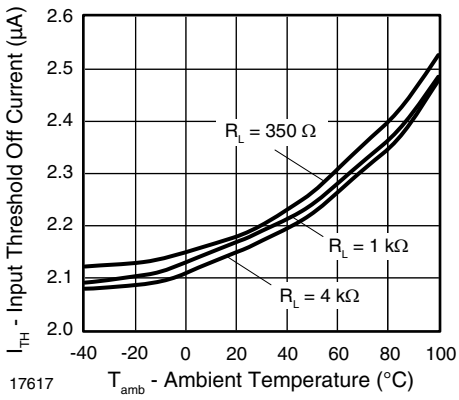

Fig. 16 - Input Threshold Off Current vs. Ambient Temperature

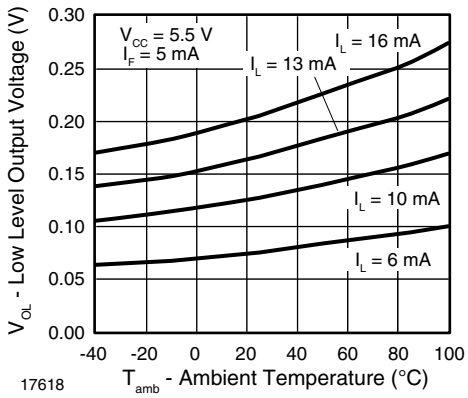

Fig. 17 - Low Level Output Voltage vs. Ambient Temperature

For technical questions, contact: optocoupleranswers@vishay.com
THIS DOCUMENT IS SUBJECT TO CHANGE WITHOUT NOTICE. THE PRODUCTS DESCRIBED HEREIN AND THIS DOCUMENT ARE SUBJECT TO SPECIFIC DISCLAIMERS, SET FORTH AT www.vishay.com/doc?91000

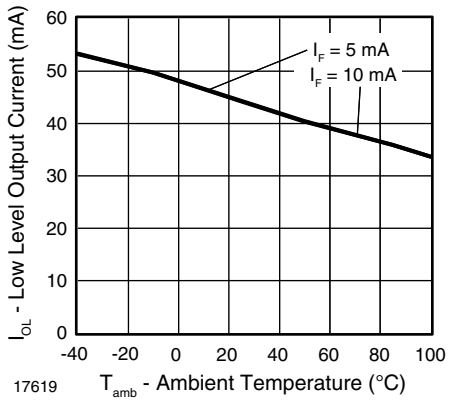

Fig. 18 - Low Level Output Current vs. Ambient Temperature

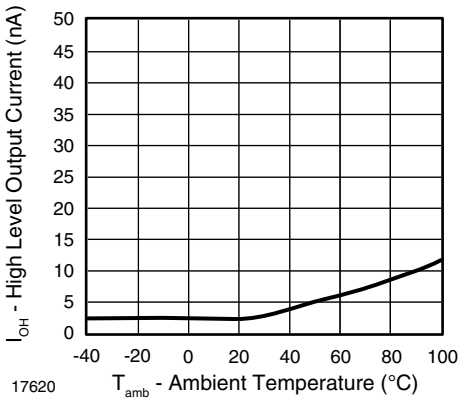

Fig. 19 - High Level Output Current vs. Ambient Temperature

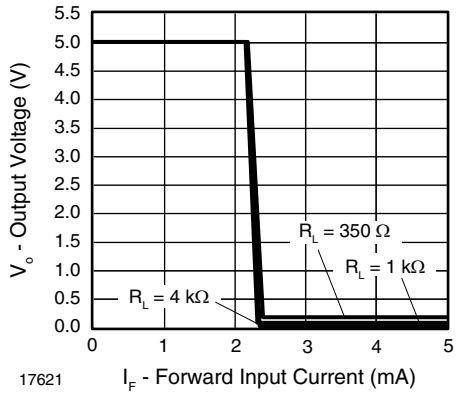

Fig. 20 - Output Voltage vs. Forward Input Current

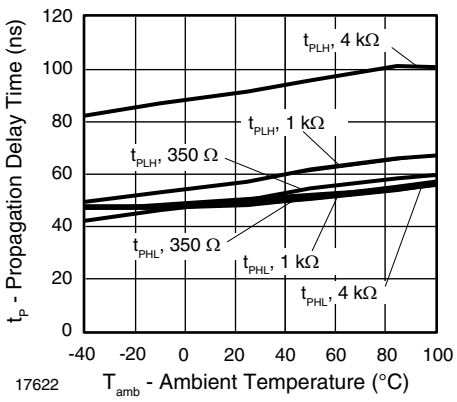

Fig. 21 - Propagation Delay vs. Ambient Temperature

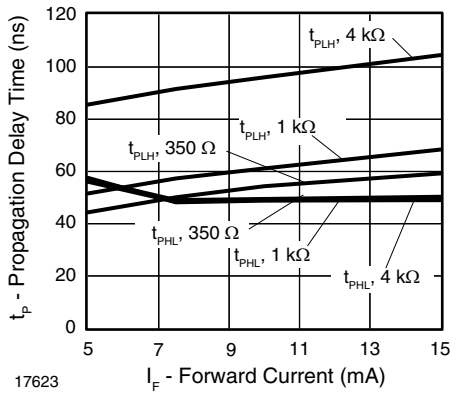

Fig. 22 - Propagation Delay vs. Forward Current

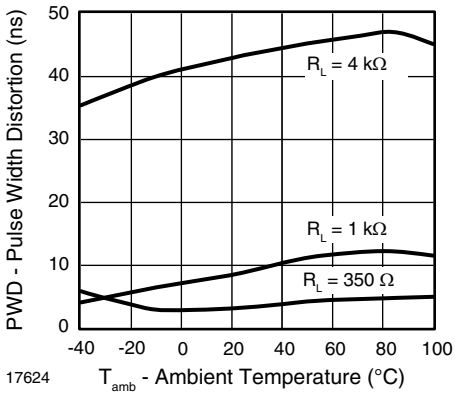

Fig. 23 - Pulse Width Distortion vs. Ambient Temperature

For technical questions, contact: optocoupleranswers@vishay.com
THIS DOCUMENT IS SUBJECT TO CHANGE WITHOUT NOTICE. THE PRODUCTS DESCRIBED HEREIN AND THIS DOCUMENT ARE SUBJECT TO SPECIFIC DISCLAIMERS, SET FORTH AT www.vishay.com/doc?91000

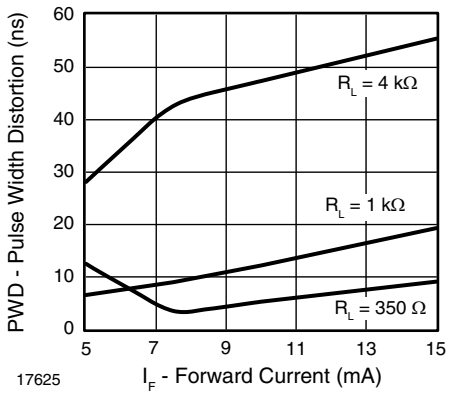

Fig. 24 - Pulse Width Distortion vs. Forward Current

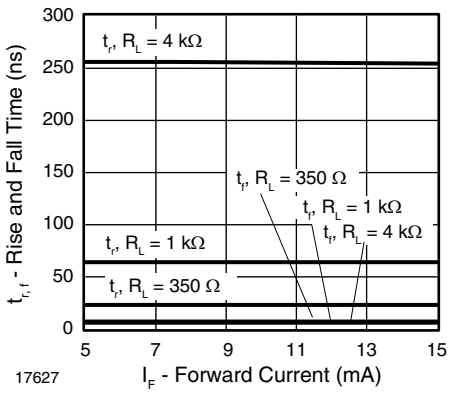

Fig. 26 - Rise and Fall Time vs. Forward Current

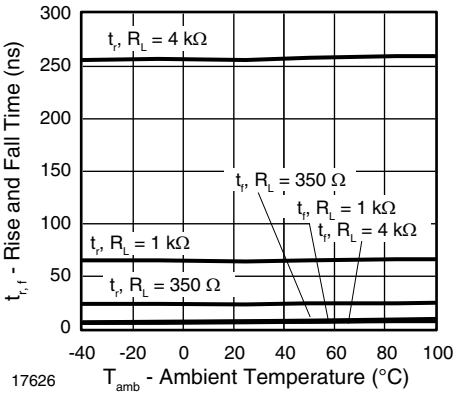

Fig. 25 - Rise and Fall Time vs. Ambient Temperature

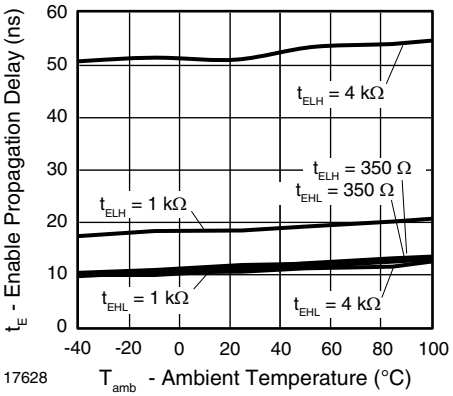

Fig. 27 - Enable Propagation Delay vs. Ambient Temperature

THIS DOCUMENT IS SUBJECT TO CHANGE WITHOUT NOTICE. THE PRODUCTS DESCRIBED HEREIN AND THIS DOCUMENT ARE SUBJECT TO SPECIFIC DISCLAIMERS, SET FORTH AT www.vishay.com/doc?91000

PACKAGE DIMENSIONS (in millimeters)

DIP-8

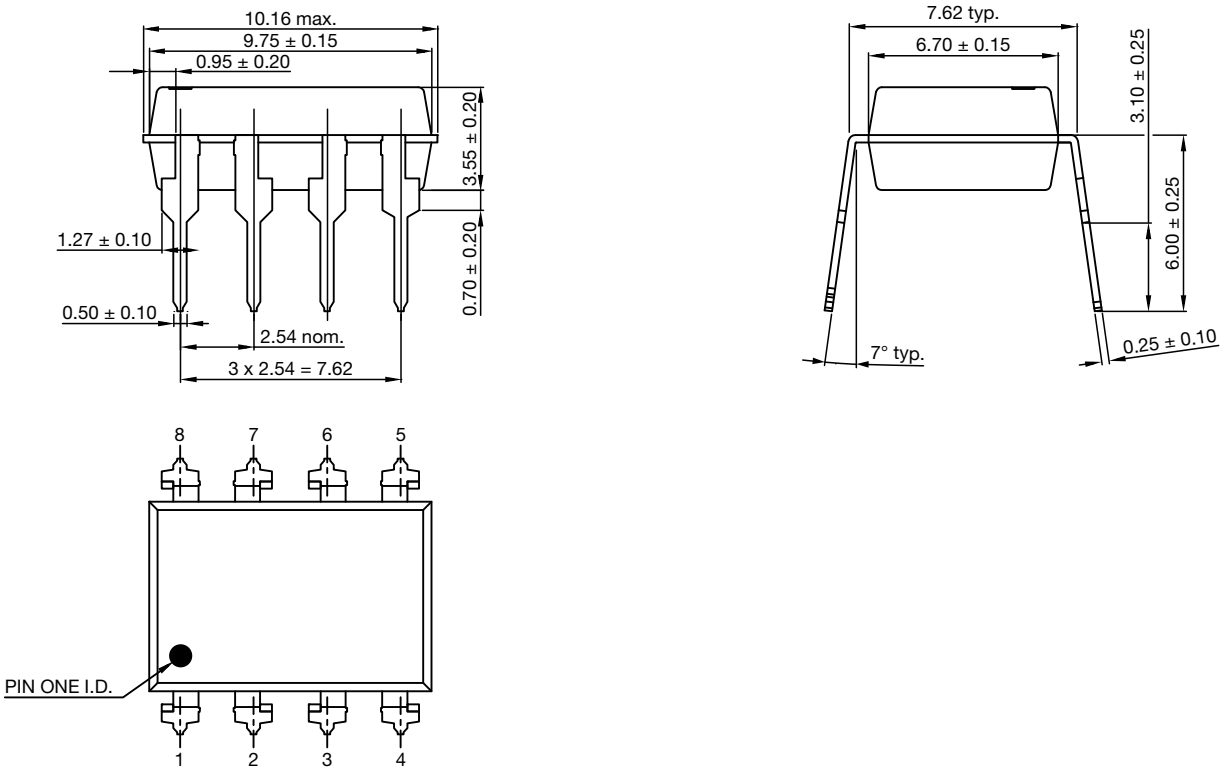

DIP-8, 400 mil (option 6)

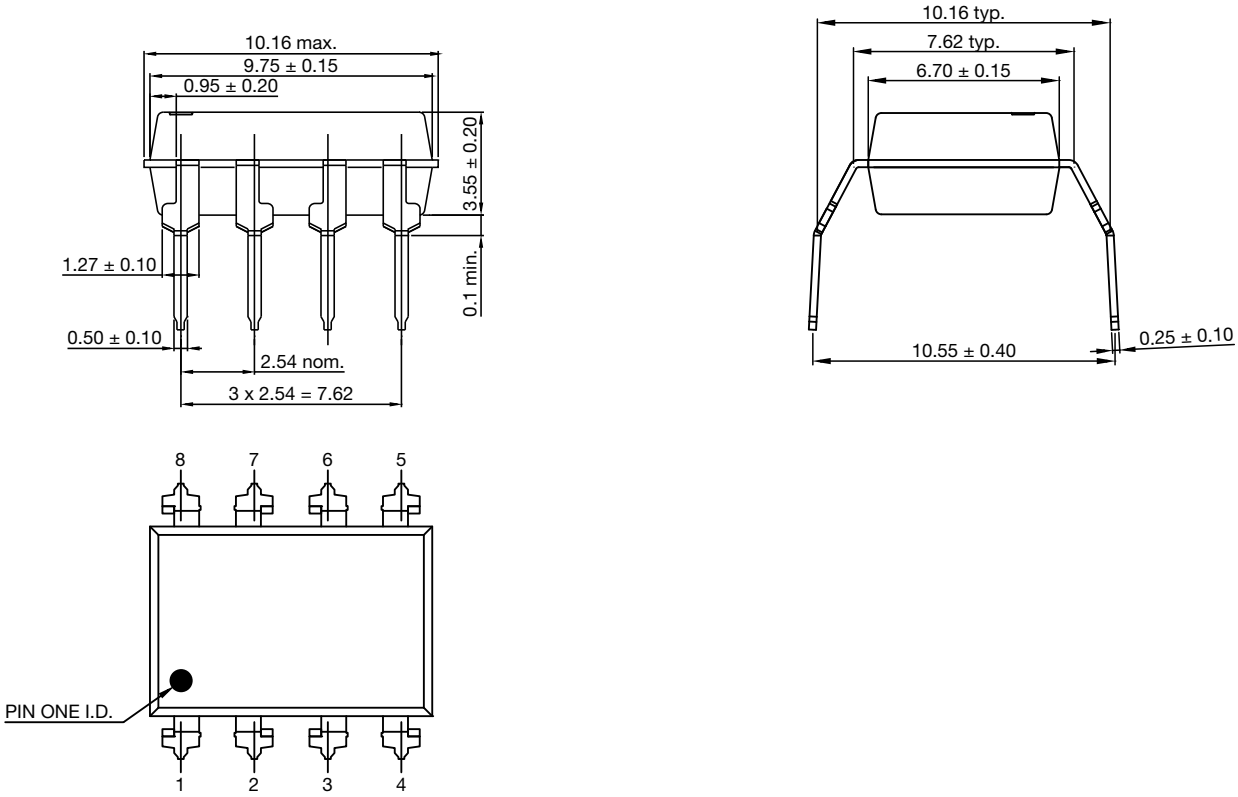

For technical questions, contact: optocoupleranswers@vishay.com
THIS DOCUMENT IS SUBJECT TO CHANGE WITHOUT NOTICE. THE PRODUCTS DESCRIBED HEREIN AND THIS DOCUMENT ARE SUBJECT TO SPECIFIC DISCLAIMERS, SET FORTH AT www.vishay.com/doc?91000

SMD-8 (option 7)

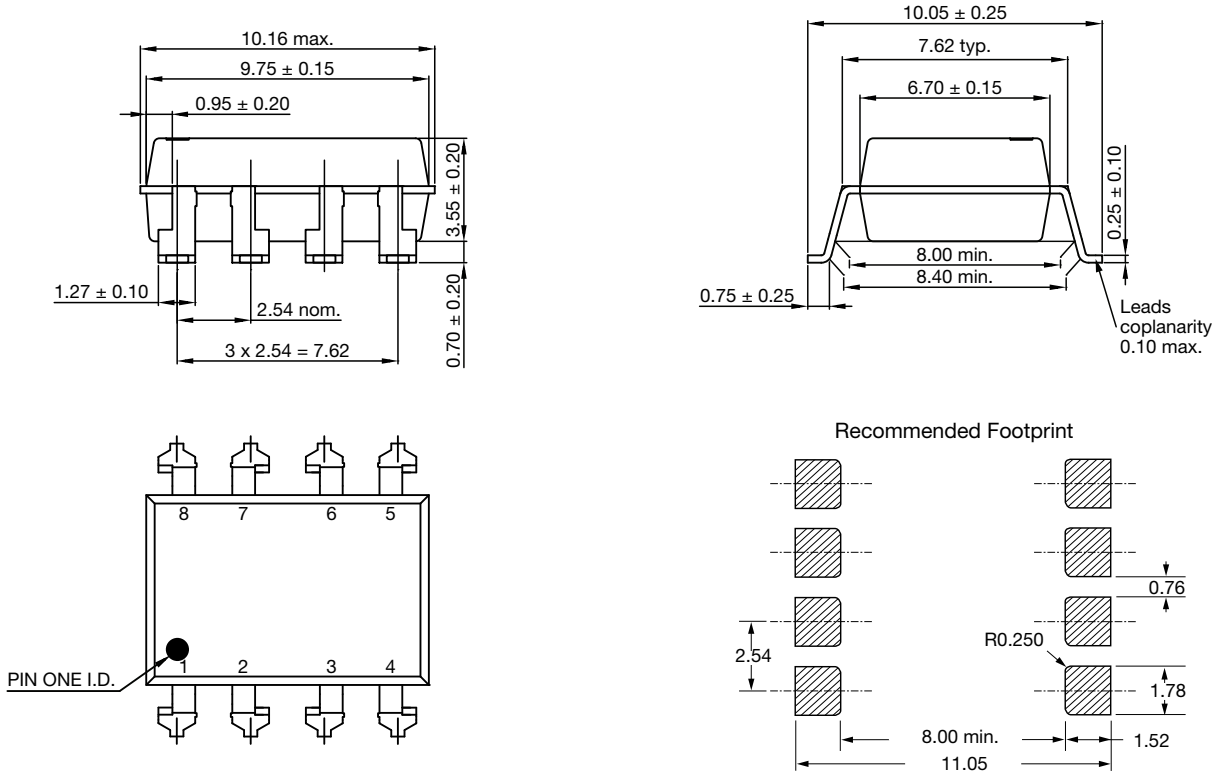

SMD-8 (option 9)

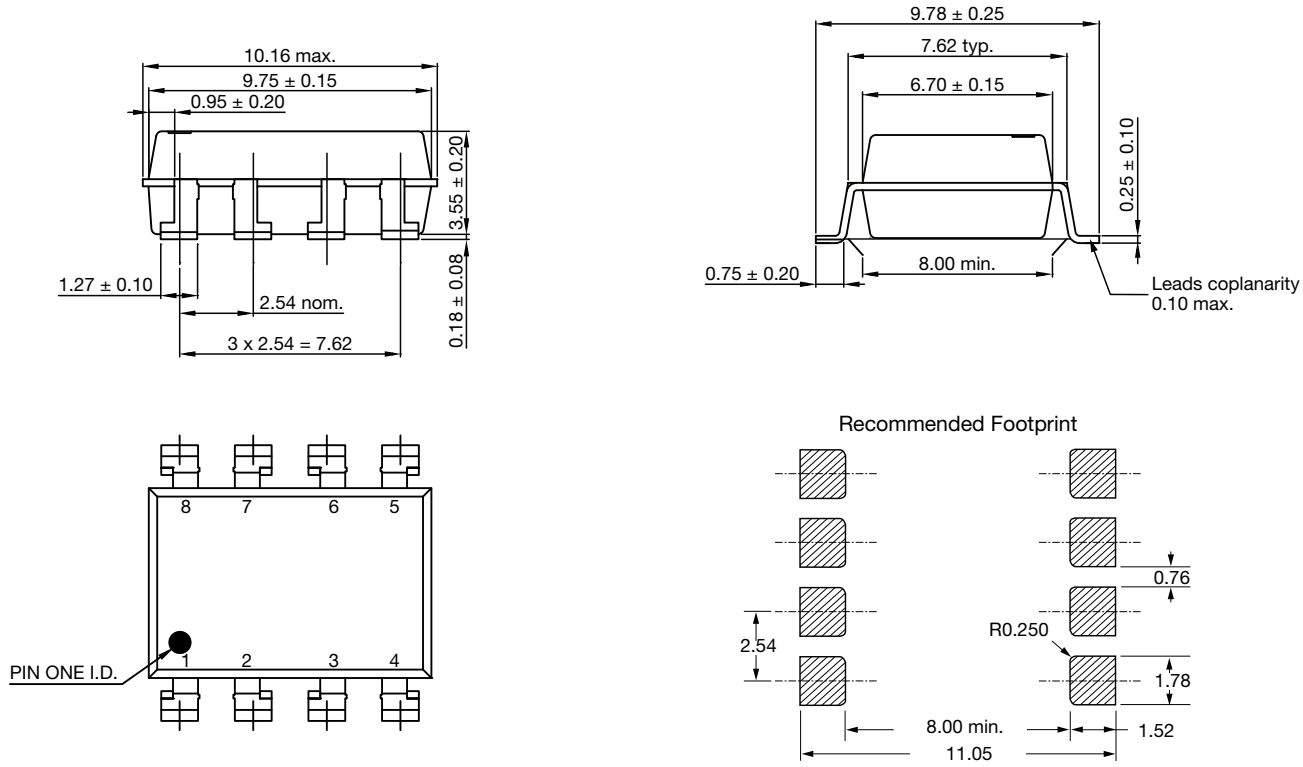

For technical questions, contact: optocoupleranswers@vishay.com
THIS DOCUMENT IS SUBJECT TO CHANGE WITHOUT NOTICE. THE PRODUCTS DESCRIBED HEREIN AND THIS DOCUMENT ARE SUBJECT TO SPECIFIC DISCLAIMERS, SET FORTH AT www.vishay.com/doc?91000

PACKAGE MARKING

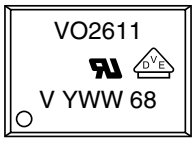

Fig. 28 - Example of VO2611-X017T

Notes

- VDE logo is only marked on option 1 parts.
- Tape and reel suffix (T) is not part of the package marking.

PACKING INFORMATION (in millimeters)

Tube

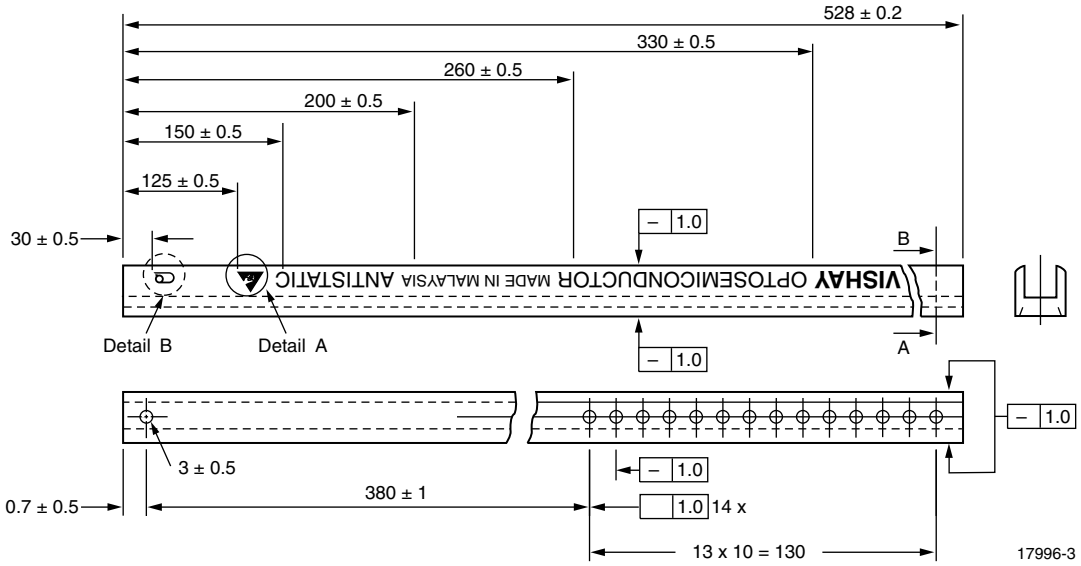

Fig. 29 - Shipping Tube Specifications for DIP-8 Packages

DEVICES PER TUBS			
TYPE	UNITS/TUBE	TUBES/BOX	UNITS/BOX
DIP-8	50	40	2000

DIP-8

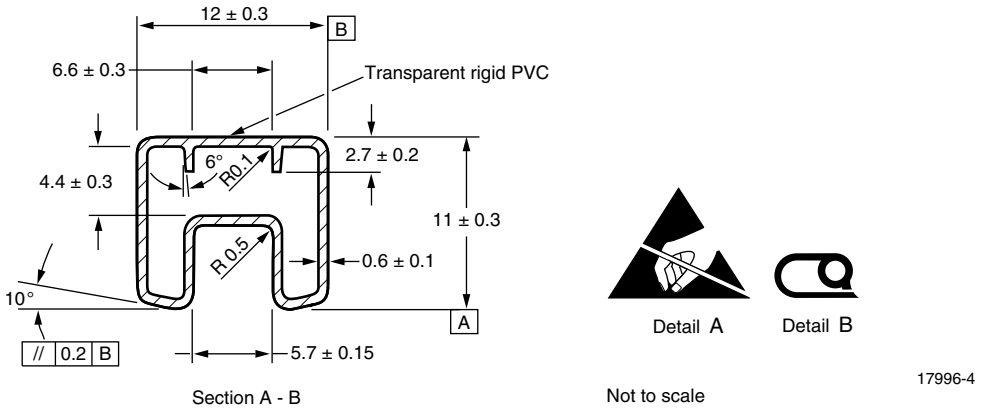

Fig. 30 - Tube Shipping Medium

For technical questions, contact: optocoupleranswers@vishay.com
THIS DOCUMENT IS SUBJECT TO CHANGE WITHOUT NOTICE. THE PRODUCTS DESCRIBED HEREIN AND THIS DOCUMENT ARE SUBJECT TO SPECIFIC DISCLAIMERS, SET FORTH AT www.vishay.com/doc?91000

DIP-8, 400 mil (option 6)

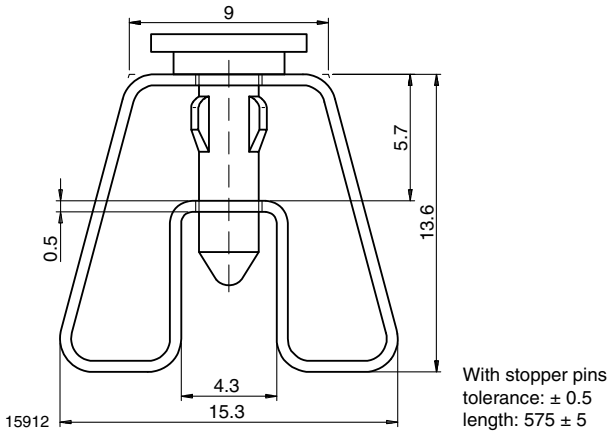

Fig. 31 - Tube Shipping Medium

Tape and Reel

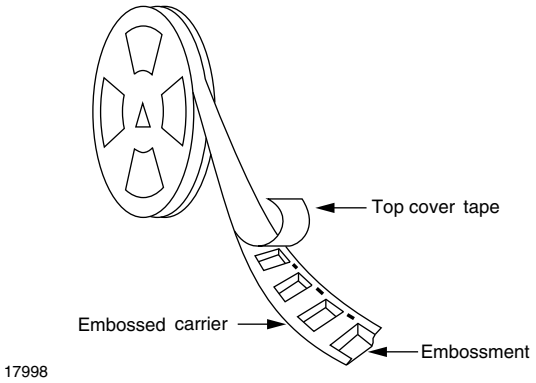

Fig. 32 - Tape and Reel Shipping Medium

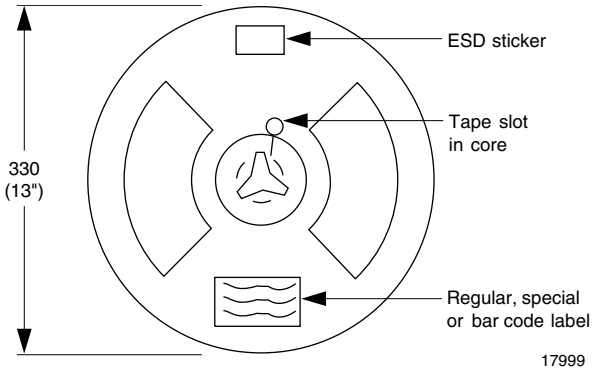

Fig. 33 - Tape and Reel Shipping Medium

SMD-8 (option 7)

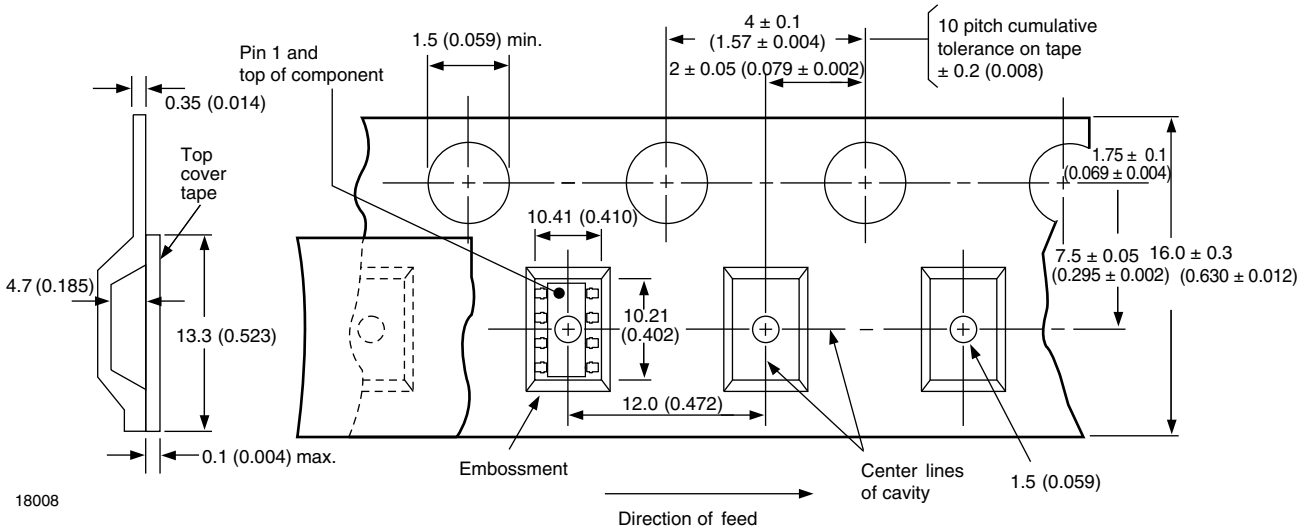

Fig. 34 - Tape and Reel Packing (1000 pieces on Reel)

For technical questions, contact: optocoupleranswers@vishay.com
THIS DOCUMENT IS SUBJECT TO CHANGE WITHOUT NOTICE. THE PRODUCTS DESCRIBED HEREIN AND THIS DOCUMENT ARE SUBJECT TO SPECIFIC DISCLAIMERS, SET FORTH AT www.vishay.com/doc?91000

SMD-8 (option 9)

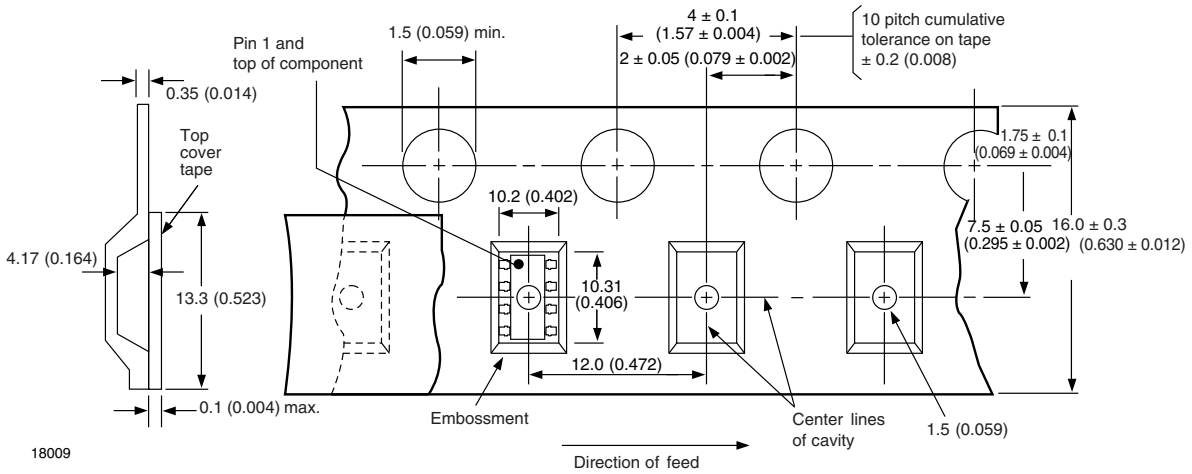

Fig. 35 - Tape and Reel Shipping Medium

SOLDER PROFILES

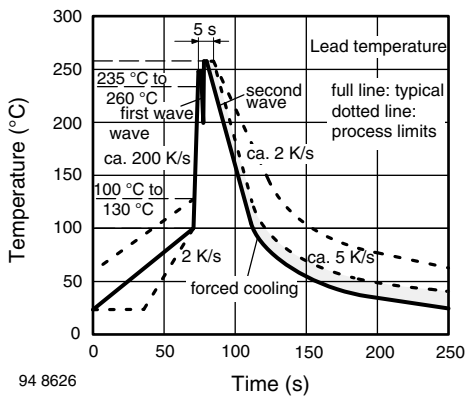

Fig. 36 - Wave Soldering Double Wave Profile According to J-STD-020 for DIP Devices

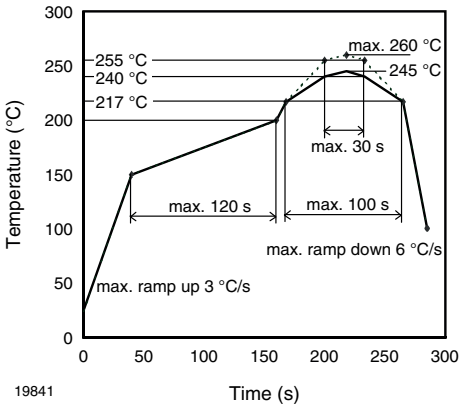

Fig. 37 - Lead (Pb)-free Reflow Solder Profile According to J-STD-020 for SMD Devices

HANDLING AND STORAGE CONDITIONS

ESD level: HBM class 2

Floor life: unlimited

Conditions: T_{amb} < 30 °C, RH < 85 %

Moisture sensitivity level 1, according to J-STD-020

For technical questions, contact: optocoupleranswers@vishay.com
THIS DOCUMENT IS SUBJECT TO CHANGE WITHOUT NOTICE. THE PRODUCTS DESCRIBED HEREIN AND THIS DOCUMENT ARE SUBJECT TO SPECIFIC DISCLAIMERS, SET FORTH AT www.vishay.com/doc?91000

Disclaimer

ALL PRODUCT, PRODUCT SPECIFICATIONS AND DATA ARE SUBJECT TO CHANGE WITHOUT NOTICE TO IMPROVE RELIABILITY, FUNCTION OR DESIGN OR OTHERWISE.

Vishay Intertechnology, Inc., its affiliates, agents, and employees, and all persons acting on its or their behalf (collectively, "Vishay"), disclaim any and all liability for any errors, inaccuracies or incompleteness contained in any datasheet or in any other disclosure relating to any product.

Vishay makes no warranty, representation or guarantee regarding the suitability of the products for any particular purpose or the continuing production of any product. To the maximum extent permitted by applicable law, Vishay disclaims (i) any and all liability arising out of the application or use of any product, (ii) any and all liability, including without limitation special, consequential or incidental damages, and (iii) any and all implied warranties, including warranties of fitness for particular purpose, non-infringement and merchantability.

Statements regarding the suitability of products for certain types of applications are based on Vishay's knowledge of typical requirements that are often placed on Vishay products in generic applications. Such statements are not binding statements about the suitability of products for a particular application. It is the customer's responsibility to validate that a particular product with the properties described in the product specification is suitable for use in a particular application. Parameters provided in datasheets and / or specifications may vary in different applications and performance may vary over time. All operating parameters, including typical parameters, must be validated for each customer application by the customer's technical experts. Product specifications do not expand or otherwise modify Vishay's terms and conditions of purchase, including but not limited to the warranty expressed therein.

Except as expressly indicated in writing, Vishay products are not designed for use in medical, life-saving, or life-sustaining applications or for any other application in which the failure of the Vishay product could result in personal injury or death. Customers using or selling Vishay products not expressly indicated for use in such applications do so at their own risk. Please contact authorized Vishay personnel to obtain written terms and conditions regarding products designed for such applications.

No license, express or implied, by estoppel or otherwise, to any intellectual property rights is granted by this document or by any conduct of Vishay. Product names and markings noted herein may be trademarks of their respective owners.