INDUSTRIAL SHIELDS

M-DUINO PLC ARDUINO ETHERNET 19R I/Os ANALOG / DIGITAL PLUS

PLC ARDUINO
ETHERNET 19R I/Os
ANALOG/DIGITAL
PLUS

MDUINO PLC ARDUINO ETHERNET 19R I/Os ANALOG / DIGITAL User Guide

Revised, August 2019

Preface

This User Guide is been implemented by Boot & Work, S.L. working under the name Industrial Shields.

Purpose of the manual

The information contained in this manual can be used as a reference to operate and get a better understanding of the technical data of the signal modules, power supply modules and interface modules.

Intended Audience

This User Guide is intended for the following audience:

- Persons in charge of introducing automation devices.
- Persons who design automation systems.
- Persons who install or connect automation devices.
- Persons who manage working automation installation.

Warnings:

- Unused pins should not be connected. Ignoring the directive may damage the controller.
- Improper use of this product may severely damage the controller.
- Refer to the controller's User Guide regarding wiring considerations.
- Before using this product, it is the responsibility of the user to read the product's User Guide and all accompanying documentation.
- Maintenance must be performed by qualified personnel familiarized with the construction, operation, and hazards involved with the control.
- Maintenance should be performed with the control out of operation and disconnected from all sources of power.
- Care should be taken when servicing electrostatic sensitive components. The manufacturer's recommendations for these components should be followed.
- The M-Duino Family PLCs are Open Type Controllers. It is required that you install the M-Duino PLC in a housing, cabinet, or electric control room. Entry to the housing, cabinet, or electric control room should be limited to authorized personnel. Failure to

follow these installation requirements could result in severe personal injury and/or property damage. Always follow these requirements when installing M-Duino family PLCs.

- In case of installation or maintenance of the M-Duino please follow the instructions marked in the Installation and Maintenance section.
- Do not disconnect equipment when a flammable or combustible atmosphere is present. Disconnection of equipment when a flammable or combustible atmosphere is present may cause a fire or explosion which could result in death, serious injury and/or property damage.

Avertissements:

- Les broches non utilisées ne doivent pas être connectées. Ignorer la directive peut endommager le contrôleur.
- Une utilisation incorrecte de ce produit peut endommager gravement le contrôleur.
- Reportez-vous au Guide de l'utilisateur du contrôleur pour les considérations de câblage.
- Avant d'utiliser ce produit, il incombe à l'utilisateur de lire le Guide de l'utilisateur du produit et la documentation qui l'accompagne.
- La maintenance doit être effectuée par personnel qualifié familiarisé avec la fabrication, le fonctionnement et les dangers liés au contrôleur.
- La maintenance doit être effectuée avec l'équipement hors service et déconnectée de toutes les sources d'alimentation.
- Faites attention lors de l'entretien des composants sensibles à l'électricité statique. Les recommandations du fabricant pour ces composants doivent être suivies.
- Les automates de la famille M-Duino sont des contrôleurs de type ouvert. Il est nécessaire d'installer l'automate M-Duino dans un boîtier, une armoire ou une salle de contrôle électrique. L'accès au boîtier, à l'armoire ou à la salle de commande électrique doit être limité au personnel autorisé. Le non-respect de ces exigences d'installation peut entraîner des blessures graves et/ou des dommages matériels importants. Respectez toujours ces exigences lors de l'installation des automates de la famille M-Duino.
- En cas d'installation ou de maintenance du M-Duino, veuillez suivre les instructions indiquées dans la section Installation et Maintenance.
- Ne débranchez pas l'équipement en présence d'une atmosphère inflammable ou combustible. La déconnexion de l'équipement en présence d'une atmosphère inflammable ou combustible peut provoquer un incendie ou une explosion pouvant entraîner la mort, des blessures graves et/ou des dommages matériels.

Application Considerations and Warranty

Read and Understand this Manual

Please read and understand this manual before using the product. Please consult your comments or questions to Industrial Shields before using the product.

Application Consideration

THE PRODUCTS CONTAINED IN THIS DOCUMENT ARE NOT SAFETY RATED. THEY SHOULD NOT BE RELIED UPON AS A SAFETY COMPONENT OR PROTECTIVE DEVICE FOR ENSURING SAFETY OF PERSONS, AS THEY ARE NOT RATED OR DESSIGNED FOR SUCH PURPOSES.

Please know and observe all prohibitions of use applicable to the products.

FOR AN APPLICATION INVOLVING SERIOUS RISK TO LIFE OR PROPERTY WITHOUT ENSURING THAT THE SYSTEM AS A WHOLE HAS BEEN DESSIGNED TO ADDRESS THE RISKS, NEVER USE THE INDUSTRIAL SHIELDS PRODUCTS.

NEVER USE THE INDUSTRIAL SHIELDS PRODUCTS BEFORE THEY ARE PROPERLY RATED AND INSTALLED FOR THE INTENDED USE WITHIN THE OVERALL EQUIPMENT OR SYSTEM.

Industrial Shields shall not be responsible for conformity with any codes, regulations or standards that apply to the combination of products in the customer's application or use of the product.

The following are some examples of applications for which particular attention must be given. This is not intended to be an exhaustive list of all possible uses of the products, nor is it intended to imply that the uses may be suitable for the products:

- Systems, machines, and equipment that could present a risk to life or property.
- Nuclear energy control systems, combustion systems, railroad systems, aviation systems, medical equipment, amusement machines, vehicles, safety equipment, and installation subject to separate industry or government regulations.
- Outdoor use, uses involving potential chemical contamination or electrical interference, or conditions or uses not described in this document.

At the customer's request, INDUSTRIAL SHIELDS will provide applicable third party certification documents identifying ratings and limitations of use that apply to the products. This information by itself is not sufficient for a complete determination of the suitability of the products in combination with the system, machine, end product, or other application or use.

Disclaimers

Weights and Dimensions

Dimensions and weights are nominal and they are not used for manufacturing purposes, even when tolerances are shown.

Performance Data

The performance data given in this manual is provided as a guide for the user in determining suitability and does not constitute a warranty. It may represent the result of INDUSTRIAL SHIELDS's test conditions, and the users most correlate it to actual application requirements. Actual performance is subject to the INDUSTRIAL SHIELDS Warranty and Limitations of Liability.

Change in Specifications

Product specifications and accessories may be changed at any time based on improvements and other reasons.

It is our practice to change model numbers when features are changed, or published ratings or when significant construction changes are made. However, some specifications of the products may be changed without any notice. When in doubt, special numbers may be assigned to fix or establish key specifications for your application on your request. Please consult with your INDUSTRIAL SHIELDS representative at any time to confirm actual specifications of purchased products.

Errors and Omissions

The information in this document has been carefully checked and is believed to be accurate; however, no responsibility is assumed for clerical, typographical, or proofreading errors, or omissions.

Warranty and Limitations of Liability

Warranty

Industrial Shields's exclusive warranty is that the products are free from defects in materials and workmanship for a period of one year (or other period if specified) from date of sale by Industrial Shields.

INDUSTRIAL SHIELDS MAKES NO REPRESENTATION OR WARRANTY, EXPRESSED OR IMPLIED, REGARDING MERCHANABILITY, NON-INFRINGEMENT, OR FITNESS FOR PARTICULAR PURPOSE OF THE PRODUCTS. ANY BUYER OR USER ACKNOWLEDGES THAT THE BUYER OR USER ALONE HAS DETERMINED THAT THE PRODUCTS WILL SUITABLY MEET THE REQUIREMENTS OF THEIR INTENDED USE. INDUSTRIAL SHIELDS DISCLAIMS ALL OTHER WARRANTIES, EXPRESS OR IMPLIED

Limitations of Liability

INDUSTRIAL SHIELDS SHALL NOT BE RESPONSIBLE FOR SPECIAL, INDIRECT, OR CONSEQUENTIAL DAMAGES, LOSS OF PROFITS OR COMERCIAL LOSS IN ANY WAY CONNECTED WITH THE PRODUCTS, WHETHER SUCH CLAIM IS BASED ON CONTRACT, WARRANTY, NEGLIGENCE, OR STRICT LIABILITY.

IN NO EVENT SHALL INDUSTRIAL SHIELDS BE RESPONISBLE FOR WARRANTY, REPAIR OR OTHER CLAIMS REGARDING THE PRODUCTS UNLESS INDUSTRIAL SHIELDS'S ANALYSIS CONFIRMS THAT THE PRODUCTS WERE PROPERLY HANDLED, STORED, INSTALLED, AND MAINTAINED AND NOT SUBJECT TO CONTAMINATION, ABUSE, MISUSE, OR INAPPROPIATE MODIFICATION OR REPAIR.

Table of Contents

1 General Description M-Duino 19R I/Os PLUS Product 10

1.1 Zone - Nomenclature 10

1.2 Zone Distribution 11

1.3 A Zone Features 11

1.4 Mechanical dimension 12

1.5 General Features 12

2 Technical Specifications: 14

2.1 General Specifications: 14

2.2 Performance Specification: 15

2.3 Symbology 15

3 Precautions 16

3.1 Arduino Board 16

3.2 Intended Audience 16

3.3 General Precautions 16

4 Software interface 17

5 How to connect PLC Arduino to PC 20

6 How to connect PLC to power supply 21

7 M-duino Family Pinout 22

7.1 A Zone connection 22

7.2 B Zone (Relay Shield) 24

8 Switch Configuration 25

8.1 A Zone: Communications 25

8.2 B Zone Switches 27

9 M-Duino Arduino I/Os 5V pins 28

9.1 I2C pins – SDA/SCL 28

9.2 Serial 0 – RX0/TX0 28

9.3 Serial 1 – RX1/TX1 29

9.4 SPI – MISO/MOSI/SCK 29

9.5 Pin 2/Pin 3 29

10 A Zone Features: Communications & RTC & uSD 30

10.1 RS-232 30
10.2 RS-485 30
10.3 I2C 30
10.4 SPI 31
10.5 TTL 31
10.6 Ethernet 31
10.7 RTC 31
10.8 uSD 32
11 Instructions for interconnection between Industrial Shields controllers 33
11.1 RS-232 Communication: 33
11.2 RS-485 Communication: 33
11.2.2 Full Duplex 33
11.3 Ethernet 34
12 I/O technical details: 35
13 Typical Connections 37
14 Connector details: 42
15 Mechanical Characteristics 43
16 Installation and Maintenance 44
17 Revision Table 47

1 General Description M-Duino 19R I/Os PLUS Product

1.1 Zone - Nomenclature

The nomenclature shown in this point will be used in the whole User Guide, so it is important to understand this nomenclature.

The nomenclature to differentiate the zones is based on the Alphabet, being A the shield from below and B the shield from above.

- The inputs in the zone B are named I0.X, being X any number suitable in the Shield. Outputs are named as Q0.X and relays as R0.X

1.2 Zone Distribution

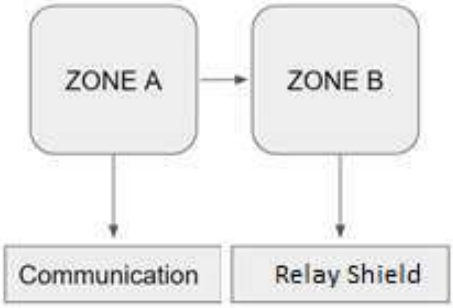

The distribution of the different features that provide the M-Duino 19R I/Os PLUS is the following one:

Shields	B Zone
Relay Shield	6 Inputs (6 Digital Inputs, 4 of which can work as Analog Input) 11 Outputs (8 Relay Output, 3 Digital/Analog Output)

1.3 A Zone Features

Shield	A Zone
Communication Shield	(1x) Ethernet (1x) USB (1x) I2C (3x) TTL (1x) RS-232 (1x) HALF/FULL Duplex RS-485 (1x) SPI external Port (1x) RTC (1x) uSD Socket

1.4 Mechanical dimension

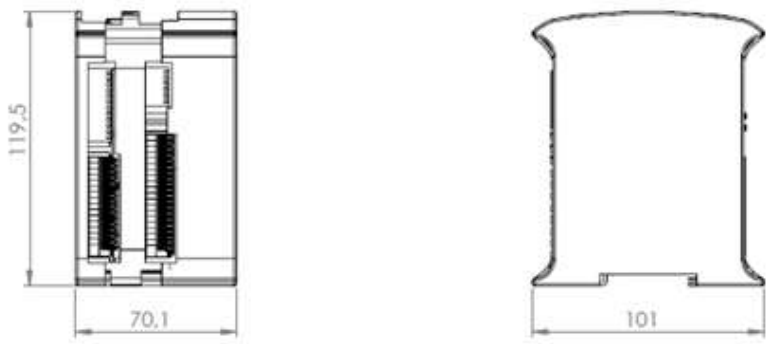

1.5 General Features

CONECTABLE PLC ARDUINO 24 VCC M-DUINO		
MODEL TYPE	**GRPS/GSM Controller General Specifications**	**Information**
Input Voltage	12 to 24 Vdc	Fuse Protection (2.5 A) Polarity protection
I max.	1.5 A	
Size	101x70.1x119.5	
Clock Speed	16 MHz	
Flash Memory	256 KB of which 8 KB used by boot loader	
SRAM	8 KB	
EEPROM	4 KB	
Communications	I2C – Ethernet Port – USB – RS485 – RS232 – SPI – (2x) RX, TX (Arduino pins)	MAX232 – MAX485 – W5500
USB Consideration!	Only meant for uploading or debugging, NOT ALWAYS connected as a serial in a project!	Cannot be working in a final application
An/Dig Input 10 bits (0-10 Vcc)	0 to 10 V Input Impedance: 39K Separated PCB ground	
Digital Isolated Input (24 Vcc)	7 to 24 Vdc I min: 2 to 12 mA Galvanic Isolation	

***Interrupt Isolated Input Hs** (24 Vcc)	7 to 24 Vdc I min: 2 to 12 mA Galvanic Isolation ⎓	
Analog Output 8 bits (0 – 10 Vcc)	0 to 10 Vdc I max: 20 mA Separated PCB Ground ⎓	
Digital Isolated Output (24 Vcc)	5 to 24 Vdc I max: 70 mA Galvanic Isolation Diode Protected for Relay ⎓	I max 24 Vdc: 410 mA
Digital Isolated Output (Relay)	24 VDC / 220 VAC I max: 5 A Galvanic Isolation Diode Protected for Relay ⎓	
PWM Isolated Output 8 bits (24 Vcc)	5 to 24 Vdc I max: 70 mA Galvanic Isolation Diode Protected for Relay ⎓	
Expandability	I2C – 127 elements – Serial Port RS232 / RS485	
***By using this type of signal can no longer use Digital signal (24 Vdc)**		

2 Technical Specifications:

2.1 General Specifications:

Item		M-Duino PLC Arduino Ethernet 19R I/Os Analog/Digital PLUS
Power supply voltage	**DC power supply**	12 to 24Vdc ⎓
Operating voltage range	**DC power supply**	11.4 to 25.4Vdc ⎓
Power consumption	**DC power supply**	30VAC max.
External power supply	**Power supply voltage**	24Vdc ⎓
	Power supply output capacity	700Ma
Insulation resistance		20MΩ min.at 500Vdc between the AC terminals and the protective earth terminal.
Dielectric strength		2.300 VAC at 50/60 Hz for one minute with a leakage current of 10mA max. Between all the external AC terminals and the protective ground terminal.
Shock resistance		80m/s^2 in the X, Y and Z direction 2 times each.
Ambient temperature (operating)		0º to 60ºC
Ambient humidity (operating)		10% to 90% (no condensation)
Ambient environment (operating)		With no corrosive gas
Ambient temperature (storage)		-20º to 60ºC
Power supply holding time		2ms min.
Weight		378g max.

2.2 Performance Specification:

Arduino Board	**ARDUINO MEGA 2560**
Control method	Stored program method
I/O control method	Combination of the cyclic scan and immediate refresh processing methods.
Programming language	Arduino IDE. Based on wiring (Wiring is an Open Source electronics platform composed of a programming language. “similar to the C”. http://arduino.cc/en/Tutorial/HomePage
Microcontroller	ATmega2560
Flash Memory	256KB of which 8KB are used by the boot loader
Program capacity (SRAM)	8KB
EEPROM	4KB
Clock Speed	16MHz
Clock Speed	16MHz

2.3 Symbology

Table that includes all the symbology that is used in the serigraph of the M-Duino PLC Arduino Ethernet 19R I/Os Analog/Digital PLUS:

Symbol	Standard No. / Standard Title	Standard Reference No. / Symbol Title	Symbol Meaning
	IEC 60417 / Graphical symbols for use on equipment	5031 / Direct Current	Indicates that the equipment is suitable for direct current only; to identify relevant terminals
	IEC 60417 / Graphical symbols for use on equipment	5032 / Alternating Current	Indicates that the equipment is suitable for alternating current only; to identify relevant terminals
	IEC 60417 / Graphical symbols for use on equipment	5130 / Pulse General	To identify the control by which a pulse is started.
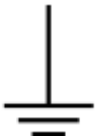	IEC 60417 / Graphical symbols for use on equipment	5017 / Earth, Ground	To identify an earth (ground) terminal in cases where neither the symbol 5018 nor 5019 is explicitly required.
	IEC 60417 / Graphical symbols for use on equipment	5115 / SIgnal lamp	To identify the switch by means of which the signal lamp(s) is (are) switched on or off.

	Medical Devices Directive 93/42/EEC	CE Marking	CE marking indicates that a product complies with applicable European Union regulations
	ISO 7000/ Graphical symbols for use on equipment	0434B / Warning symbol	Indicates a potentially hazardous situation which, if not avoided, could result in death or serious injury
	ISO 7000/ Graphical symbols for use on equipment	5036 / Dangerous Voltage	To indicate hazards arising from dangerous voltages

3 Precautions

Read this manual before attempting to use the ETHERNET 19R I/Os ANALOG/DIGITAL PLUS PLC and follow its descriptions for reference during operation.

3.1 Arduino Board

The MDUINO PLC ARDUINO ETHERNET BLE 19R I/Os ANALOG/DIGITAL PLUS includes an Arduino Mega Board as controller.

3.2 Intended Audience

This manual is intended for technicians, which must have knowledge on electrical systems.

3.3 General Precautions

The user must operate M-Duino according to the performance specifications described in this manual.

Before using the M-DUINO PLC ARDUINO ETHERNET 19R I/Os ANALOG / DIGITAL PLUS under different conditions from what has been specified in this manual or integrating into nuclear control systems, railroad systems, aviation systems, vehicles, combustion systems, medical equipment, amusement machines, safety equipment and other systems, machines, and equipment that may have a serious influence on lives and property if used improperly, consult your INDUSTRIAL SHIELDS representative. Ensure that the rating and performance characteristics of the M-Duino are sufficient for the systems, machines, and equipment, and be sure to provide the systems, machines, and equipment double safety mechanisms. This manual provides information for programming and operating the M-DUINO.

4 Software interface

Industrial Shields PLC are programmed using Arduino IDE, which is a software based on the C language. They can also be programmed using directly C but it is much easier working with Arduino IDE as it provides lots of libraries that helps in the programming.

Industrial Shields provides boards for programming the PLCs much easier. Basically it is no needed to define the pins and if that pins are inputs or outputs. Everything is set up automatically if using the boards.

In order to install Industrial Shields boards, these are the steps that must be followed.

Requirements:

Arduino IDE 1.8.0 or above (better to have always the latest version).

Steps:

1. Open Arduino IDE and go to: “File -> Preferences” located in the top left corner.

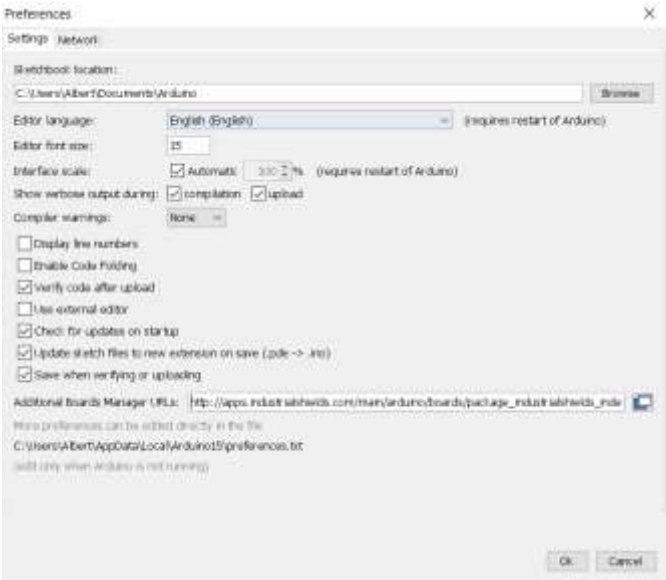

2. In Additional Boards Manager URLs write the following:

http://apps.industrialshields.com/main/arduino/boards/package_industrialshields_index.json

3. Press OK to save the changes.

4. Go to: Tools -> Board: … -> Boards Manager

5. Search for “industrialshields” on the browser.

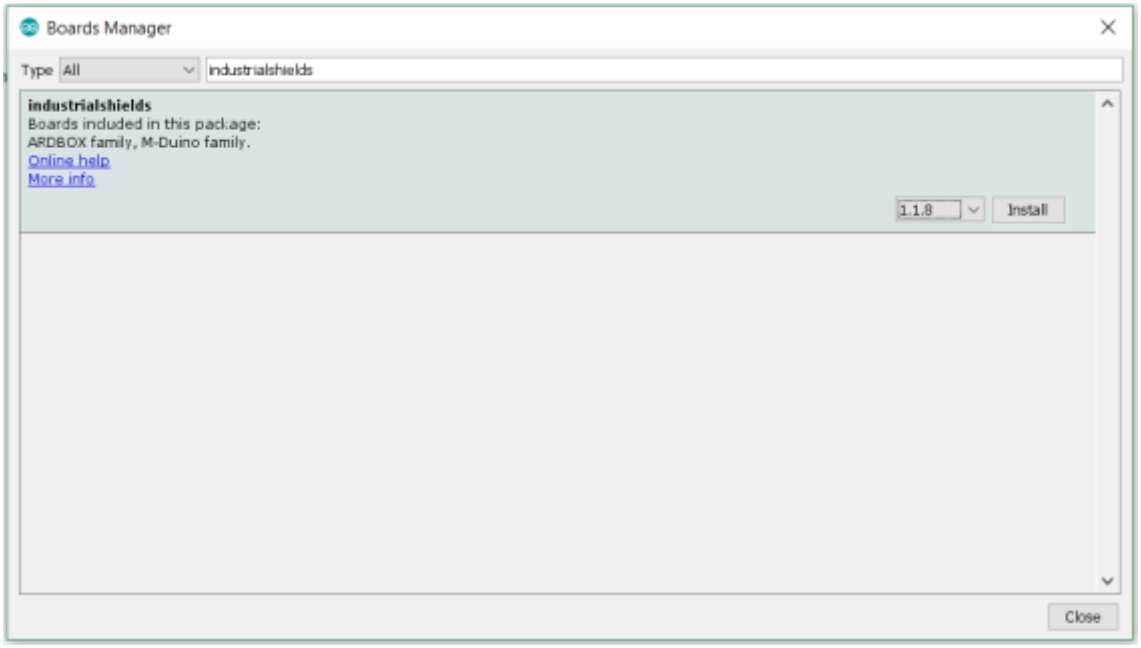

6. Click install (selecting the latest version).

Following these steps you will be able to see now the Industrial Shields Boards:

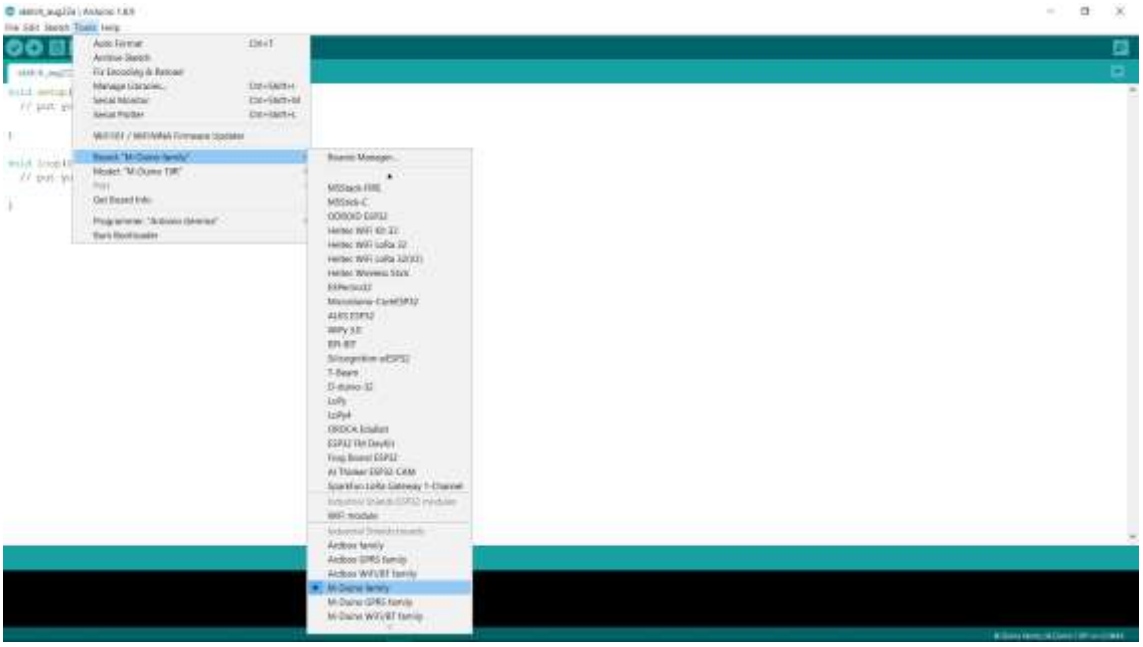

Once it is selected the Ardbox Family or M-Duino family an extra option will appear on Tools:

There, it can be selected the exact model for every family. In this case **M-Duino 19R+.**

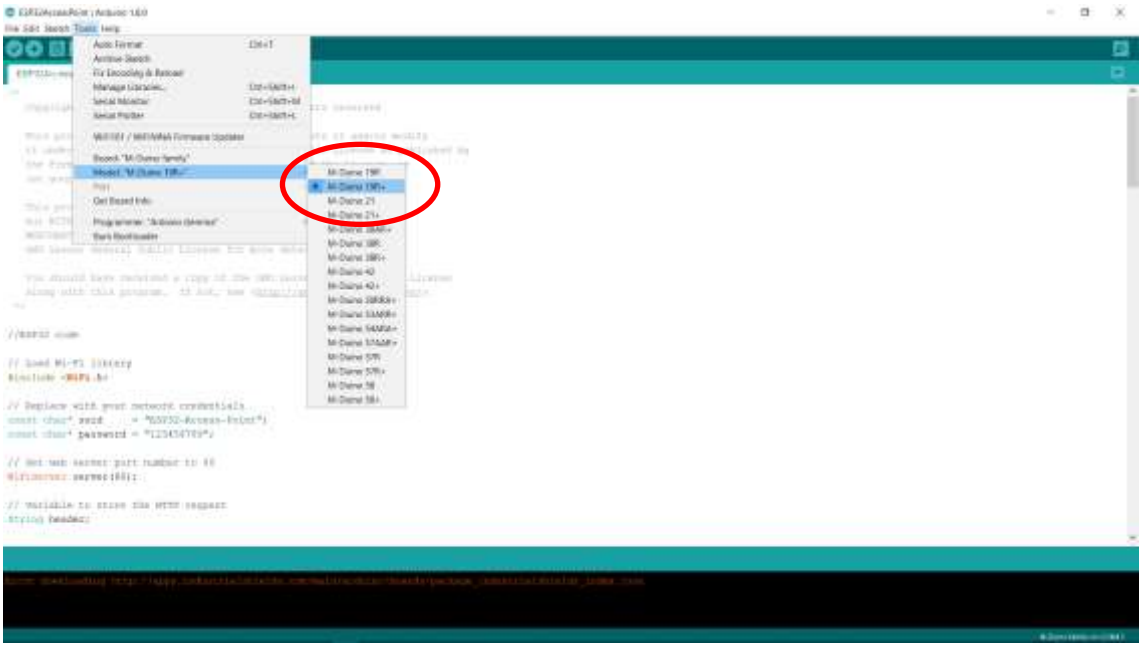

Also there are some examples of programming in File -> Examples -> M-Duino Family.

Furthermore there are some extra libraries that can be found in Industrial Shields GitHub.

https://github.com/IndustrialShields/

5 How to connect PLC Arduino to PC

- Connect USB port from PLC to PC.

NOTE:
M-Duino Family uses USB-B cable.

- Open Arduino IDE interface:

- Select Industrial Shields boards -> M-Duino Family

- Select the correct M-Duino Board:
  M-Duino 19R+

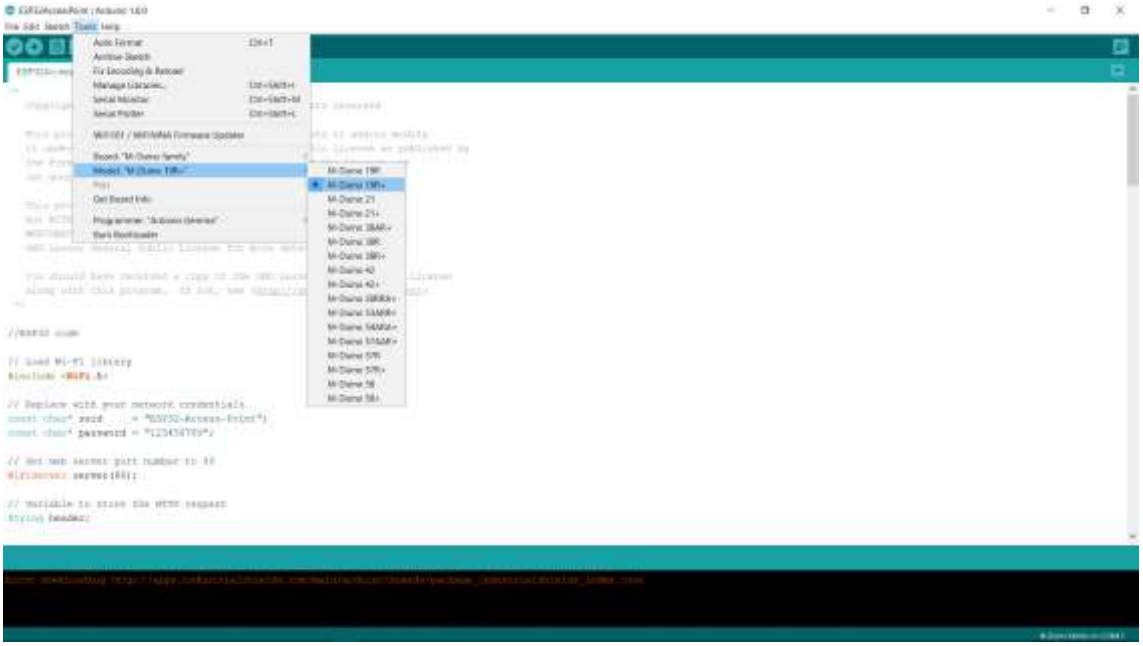

- Select correct port.

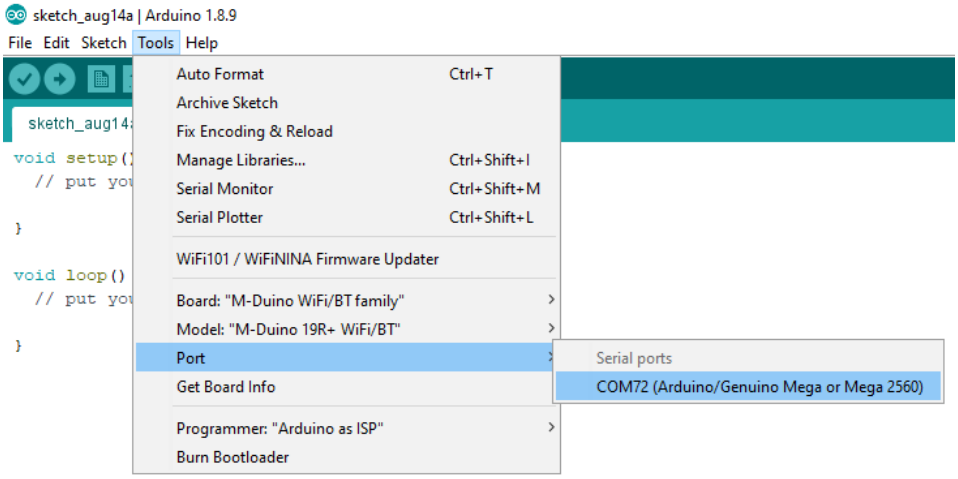

6 How to connect PLC to power supply

- M-Duino Family PLCs are 12-24Vdc supplied. IMPORTANT: The polarity **IS NOT REVERSAL!**
- Make sure that the live and GND connector of the power supply match the PLC.
- Make sure that the power supply mains output is not higher than 24Vdc.

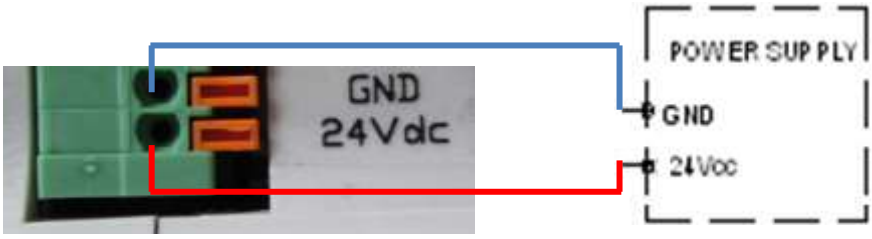

- Suggested power suppliers

Compact DIN rail power supply. Assembled on 35mm DIN Rail:
-12Vdc / 24Vdc
-2.5A
-30W

Industrial Shields power supplies provide parallel operation, overvoltage protection, and overcurrent protection. There is a LED inductor for power status, the power supply is certified according to UL.

The standard, Part 1 of IEC 61010, sets the general safety requirements for the following types of electrical devices and their accessories, regardless of where use of the device is intended.

The equipment must be powered from an external power source in accordance with IEC 61010-1, whose output is MBTS and is limited in power according to section 9.4 of IEC 61010-1.

WARINING: Once the equipment is installed inside an electrical cabinet, the MTBS cables of the equipment must be separated from the dangerous voltage cables.

7 M-duino Family Pinout

7.1 A Zone connection

Base (common unit)		
A Zone		
M-Duino Connector	*Arduino Pin*	Function
SCL	*21*	I2C/SS
SDA	*20*	I2C/SS
RX0	*1*	RX0/SS
TX0	*0*	TX0/SS
RX1	*19*	RX1/SS
TX1	*18*	TX1/SS
TX	*16*	RX2(serial 2)
RX	*17*	TX2(serial 2)
Z-	-	RS485
Y+	-	RS485
B-	-	RS485
A+	-	RS485
PIN3	*3*	Arduino Pin
50 SO	*50*	SPI
51 SI	*51*	SPI
SCK	*52*	SPI
Reset	*Reset*	SPI
Vin5	*Vin5*	5V
PIN2	*2*	Arduino Pin
GND	-	Gnd
GND	-	Gnd
24Vdc		Power Supply

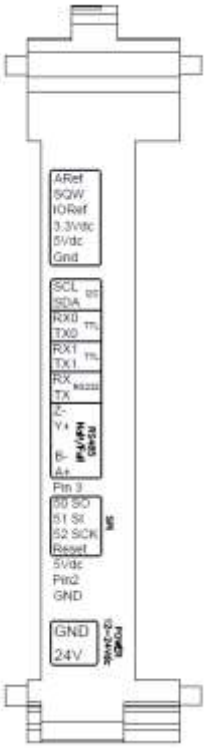

Configuration Switch* (see section 8 for configuring the communications. Enabling communications disables some I/Os)

Communication Pins

Power supply connectors (24Vdc – GND)

SS: Chip Select pins. These pins can act as TTL, so they can work for the Chip Select pin of any device.

Base (common unit)		
A Zone		
M-Duino Connector	*Arduino Pin*	Function
AREF	*AREF*	Arduino PIN
IOREF2	*IOREF2*	Arduino PIN
IOREF1	*IOREF1*	Arduino PIN
7Vdc	*7Vdc*	-
GND	*GND*	GND
3.3Vdc	*3.3Vdc*	Arduino PIN
GND	*GND*	GND
5Vdc	*5Vdc*	-
GND	*GND*	GND

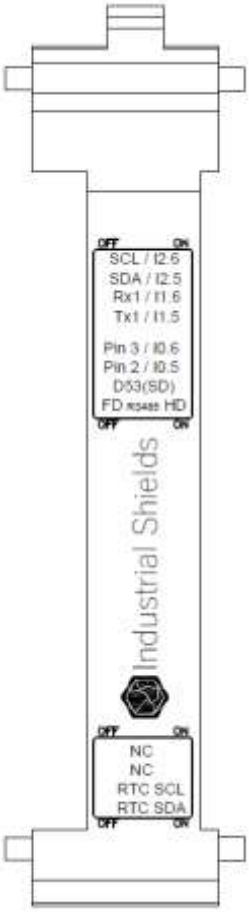

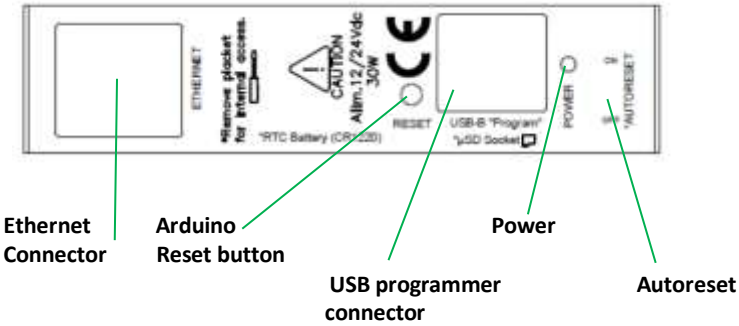

**NOTE: Autoreset. Arduino mega has auto reset when using serial communication code. Set switch to OFF when using serial communication. When uploading code to Arduino Mega set switch to ON.*

7.2 B Zone (Relay Shield)

B Zone		
M-Duino Connector	*Arduino Pin*	Function
R0.8	*37*	Relay Out
R0.7	*38*	Relay Out
R0.6	*39*	Relay Out
R0.5	*40*	Relay Out
R0.4	*24*	Relay Out
A0.2[1]	*6*	Analog Out
A0.1[1]	*5*	Analog Out
A0.0[1]	*4*	Analog Out
GND	*GND*	GND
Q0.2[1]	*6*	Digital/PWM Out
Q0.1[1]	*5*	Digital/PWM Out
Q0.0[1]	*4*	Digital/PWM Out
GNDCOM	-	External Isolated Out Gnd
24VCOM	-	External Isolated Out Vdc

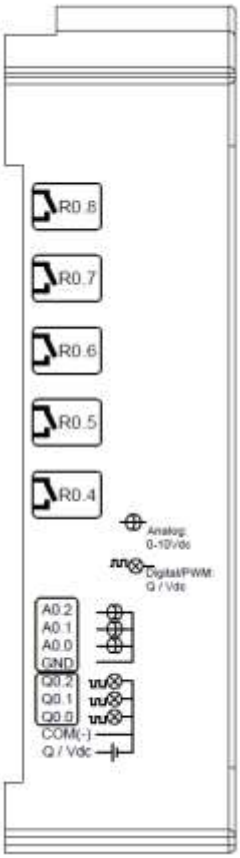

Relay Outputs

Analog Outputs (Switch Configuration)

Digital/PWM Outputs (isolated)

Top Zone

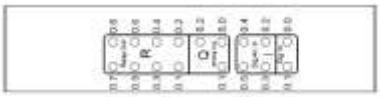

Led indicator I/Os state

B Zone		
M-Duino Connector	*Arduino Pin*	Function
R0.3	*25*	Relay Out
R0.2	*22*	Relay Out
R0.1	*23*	Relay Out
GND	*GND*	GND
I0.5	*57*	Analog/Digital Input
I0.4	*56*	Analog/Digital Input
I0.3	*55*	Analog/Digital Input
I0.2	*54*	Analog/Digital Input
I0.1[1]	*3*	Interrupt 1 In
(-)I0.1	-	GND I0.1
I0.0[1]	*2*	Interrupt 0 In
(-)I0.0	-	GND I0.0

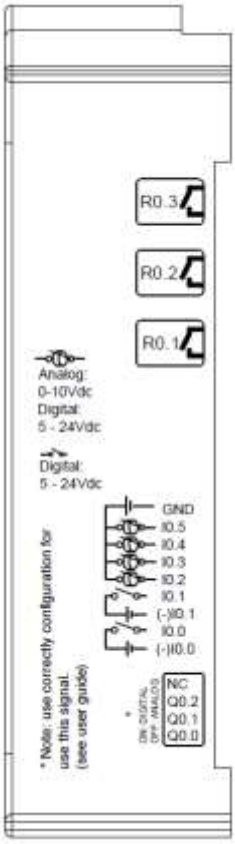

.

Relay Outputs

Analog/Digital Inputs

Interrupt Inputs (isolated)

Configuration Switch*
(see section 8 to select the correct configuration for outputs).

See section 8 to select suitable switch configuration for enable these connections.

8 Switch Configuration

8.1 A Zone: Communications

LEFT ZONE		
Switch		
	ON	**OFF**
B ZONE		
Pin 3/I0.1	I0.1	Pin 3
Pin 2/I0.0	I0.0	Pin 2
uSD & RS-485		
D53(SD)	-	SD
FD RS-485 HD	HD	FD

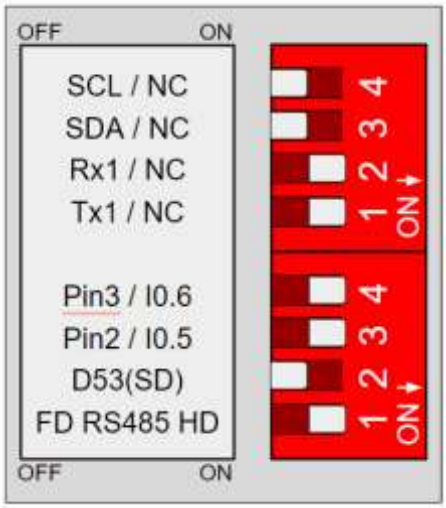

4. SCL/I2.1: ALWAYS AT OFF POSITION. On the MDUINO PLC ARDUINO ETHERNET 19R I/Os ANALOG/DIGITAL PLUS Controller this switch is **not connected**.

3. SDA/I2.0: ALWAYS AT OFF POSITION. On the MDUINO PLC ARDUINO ETHERNET 19R I/Os ANALOG/DIGITAL PLUS Controller this switch is **not connected**.

2. RX1/I1.1: Choosing between RX1 or the input I1.6. If this switch is ON, it enables the I1.6 input and disables the RX1. If this switch is OFF, it enables RX1 and disables I1.6.

1. TX1/I1.0: Choosing between TX1 or the input I1.5. If this switch is ON, it enables the I1.5 input and disables the TX1. If this switch is OFF, it enables TX1 and disables I1.5.

4. Pin 3/I0.1: Choosing between Pin 3 or the input I0.1. If this switch is ON, it enables the I0.1 input and disables the Pin 3. If this switch is OFF, it enables Pin 3 and disables I0.1.

3. Pin 2/I0.0: Choosing between Pin 2 or the input I0.0. If this switch is ON, it enables the I0.0 input and disables the Pin 2. If this switch is OFF, it enables Pin 3 and disables I0.0

2. D53(SD): ALWAYS AT OFF POSITION. Switch has to be OFF position to enable the Chip Select of the micro SD card, **never ON** because in this position is NC (Not Connected).

1. FD RS-485 HD: Choosing between FD or HF. If this switch is ON, it enables the Half Duplex (HD) option and disables the FD. If this switch is OFF, it enables Full Duplex (FD) and disables HD.

LEFT ZONE		
SWITCH	**ON**	**OFF**
NC	-	-
NC	-	-
RTC SCL	RTC	-
RTC SDA	RTC	-

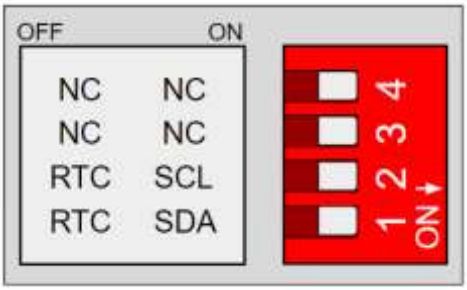

1. **RTC SDA:** This switch enables the communication to communicate with the RTC using I2C. Having this switch in ON mode it actives this communication, whereas if it is in OFF mode it disables the I2C to reach the RTC.

2. **RTC SCL:** This switch enables the communication to communicate with the RTC using I2C. Having this switch in ON mode it actives this communication, whereas if it is in OFF mode it disables the I2C to reach the RTC.

3. **NC:** Not connected. This switch is not connected to anything, it doesn't matter if it is in ON mode or OFF mode.

4. **NC:** Not connected. This switch is not connected to anything, it doesn't matter if it is in ON mode or OFF mode.

8.2 B Zone Switches

B ZONE		
SWITCH	**ON**	**OFF**
NC	-	-
Q0.2	Q0.2	A0.2
Q0.1	Q0.1	A0.1
Q0.0	Q0.0	A0.0

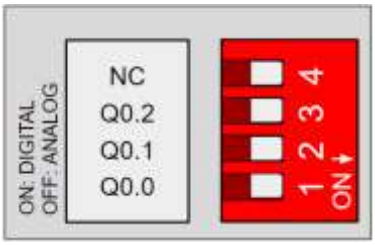

For the Relay Shield if a switch is set to ON, it can only act as Digital Output. If it is set to OFF it can only act as an Analog Output.

If it is desired to use a Digital Output the pin must be set to ON and the pin that will provide this digital output is represented with Q0.X, being X any number of the tables above.

If it is desired to use an Analog Output the pin must be set to OFF and the pin that will provide this analog output is represented with A0.X, being X any number of the tables above.

9 M-Duino Arduino I/Os 5V pins

The MDUINO PLC ARDUINO ETHERNET 19R I/Os ANALOG/DIGITAL PLUS has some of the Mega board pins available. These pins can be programmed according to Arduino features such as I/Os operating at 5V or any additional features present in the pins (for example I2C communication in pins SCL and SDA). As these pins are directly connected to the Arduino Mega board, they are not as well protected as the normal inputs. These pins are mainly meant to be used as prototyping.

The Arduino board available pins are summarized in the table below. In order to access some of these pins the configuration switch must be set to OFF position (see section 8) and some extra considerations must be taken in consideration when using these pins.

M-Duino terminal	Arduino pin	Enable Arduino pin
SCL	21	Communication switch: OFF
SDA	20	Communication switch OFF
RX0	0	
TX0	1	
RX1	19	Communication switch OFF
TX1	18	Communication switch OFF
MISO	50	
MOSI	51	
SCK	52	
Pin 3	3	Communication switch: OFF
Pin 2	2	Communication switch: OFF

***IMPORTANT:** Do not connect the terminals in the chart above to voltages higher than 5V. These terminals provide direct access to the Mega board.

A part from the switch configuration, there are some special conditions depending on these 5V. Now it is going to be shown the considerations to operate with these pins.

9.1 I2C pins – SDA/SCL

The I2C protocol is meant to work in a pull-up configuration. A pull-up configuration means that when the pin is at rest (nothing connected to it) it always reads a HIGH value. In this case it reads 5V when nothing is connected. The pull-up configuration is established by default in these pins.

If it is meant to work them as a GPIO at 5V, it has to be considered that they are pull-up inputs.

*IMPORTANT: I2.5 & I2.6 are not pull-up inputs although they are referred to the I2C pins (switch configuration). There is a “reverse pull-up circuit “that is established in order to have the same behaviour as the other inputs.

9.2 Serial 0 – RX0/TX0

The Serial0 protocol can work also as a 5V pin. These pins should be used ultimately, only in case that all the 5V pins are already performing a function. This is because they are shared with the USB interface. If using these pins, the USB communication cannot be working at the same time. When the PLC is not installed, the USB communication is normally required for

debugging, uploading and intercommunicating with the Ethernet controller. If using both interfaces at the same time the Arduino board will get blocked.

These pins are not established with a pull-up or a pull-down configuration by default. The Arduino board allows the pins to be set in a pull-up configuration. Otherwise, an external pull-up or pull-down circuit could be set.

9.3 Serial 1 – RX1/TX1

These pins are only referred to the inputs I1.5/I1.6. The RX1/TX1 pins will only be available if the switch configuration is in OFF position. If not using the Serial 1 interface these pins can work as digital, either input or output.

These pins are not established with a pull-up or a pull-down configuration by default. The Arduino board allows the pins to be set in a pull-up configuration. Otherwise, an external pull-up or pull-down circuit could be set.

9.4 SPI – MISO/MOSI/SCK

These pins can only work as a 5V pins if the Ethernet protocol is not going to be used. As the Ethernet protocol uses the SPI to communicate with the Arduino board, both behaviours cannot happen at the same time as the Ethernet would not work.

These pins are not established with a pull-up or a pull-down configuration by default. The Arduino board allows the pins to be set in a pull-up configuration. Otherwise, an external pull-up or pull-down circuit could be set.

9.5 Pin 2/Pin 3

These pins are only referred to the inputs I0.0/I0.1. If the switch configuration is in OFF position the pins Pin 2/Pin 3 will be available.

These pins are not established with a pull-up or a pull-down configuration by default. The Arduino board allows the pins to be set in a pull-up configuration. Otherwise, an external pull-up or pull-down circuit could be set.

10 A Zone Features: Communications & RTC & uSD

10.1 RS-232

The Arduino Mega function code to access the RS-232 port in the M-Duino is Serial2 (pins 16 and 17 of the Arduino Mega).

For the RS-232 communication protocol there isn't any switch that affects it. So it does not matter the configuration of the switches to implement a RS-232 communication.

Using the boards of Industrial Shields, there is a library that simplifies the RS-232 implementation.

10.2 RS-485

For RS485 communication protocol the defined Arduino Mega pins are showed in the chart below.

Function	Arduino Pin
DI	14
RO	15
RE	11
DE	46

For the RS-485 communication protocol there is only one switch that affects in this communication. The RS-485 protocol will be always enabled, the only switch that affects is the one called "FD rs-485 HD" (See Section 8). This switch makes the choosing between RS-485 Half Duplex or RS-485 Full Duplex (RS-422).

Using the boards of Industrial Shields, there is a library that simplifies the RS-485 implementation.

10.3 I2C

The I2C protocol is meant to work in a pull-up configuration. A pull-up configuration means that when the pin is at rest (nothing connected to it) it always reads a HIGH value. In this case it reads 5V when nothing is connected. The pull-up configuration is established by default in these pins.
If it is meant to work them as a GPIO at 5V, it has to be considered that they are pull-up inputs.

10.4 SPI

The M-Duino pins used for the SPI bus are summarized in the table below. The MISO, MOSI and CLOCK pins are the same for all the connected devices, while the SS pin, conversely, will be unique for each one.

Function	M-Duino connection	Mega board pin
MISO	50 S0	50
MOSI	51 SI	51
CLOCK	52 SCK	52
Reset	Reset	Reset
SS	SCL/SDA/RX0/TX0/RX1/TX1/RX3/TX3/Pin2/Pin3	21/20/1/0/19/18/15/14/2/3

Check the switch configuration at section 8 to enable SS pins.

10.5 TTL

M-Duino has two TTL ports, RX0/TX0, RX1/TX1. TTL0 is accessed with the function Serial (pins 0 and 1 of the Arduino Mega). TTL1 is accessed with the function Serial1 (pins 18 and 19 of the Arduino Mega).

10.6 Ethernet

M-Duino Ethernet port controller is based on w5500 IC, which is the compatible IC compatible with Arduino Ethernet2 Shield libraries. All Ethernet shield Arduino libraries are compatible with the M-Duino. In the M-Duino, W5500 IC communicates to the Mega board via SPI bus (SS Arduino Mega pin 10).

10.7 RTC

M-Duino RTC Module is based on the DS1307 Chip. This chip works with the I2C protocol communication, so it is required to have enabled the I2C protocol.

4 switches have to be configured in order to enable the RTC features:

LEFT ZONE		
SWITCH	**ON**	**OFF**
NC	-	-
NC	-	-
RTC SCL	RTC	-
RTC SDA	RTC	-

RTC SCL & RTC SDA must be set to ON mode to enable the I2C wires to the RTC. If they are in OFF mode, the Arduino won't communicate with the RTC.

I2C must be enabled in order to communicate with the RTC. See section 11 I2C to enable it.

Using the boards of Industrial Shields, there is a library that simplifies the RTC implementation called RTC.

10.8 uSD

The micro SD uses the SPI communication to interact with the Arduino Mega. The SPI protocol is always enabled, as there are no switches that configure it. However, there is a switch that must be placed to ON mode in order to communicate with the uSD:

D53(SD): If this Switch is OFF, it enables the Chip Select of the micro SD socket and disables Q2.0. If this switch is ON, it enables the Q2.0 output. If the switch is in ON mode the micro SD can't be used.

The uSD socket is found in the TOP part of the communication Shields, so in the frontal part of the PLC, it is required to open the plastic found in the frontal part and the socket is located under the supply of the Arduino.

Using the boards of Industrial Shields, there is a library that simplifies the uSD implementation called SD. It is the same as the Arduino library, with the only modification of using the pin 53 to select the Chip Select of the uSD chip.

Verify that the CPU is not actively running a process before inserting the memory card.

Inserting a memory card will cause the CPU to go to STOP mode, which could affect the operation of an online process or machine. Unexpected operation of a process or machine could result in death or injury to personnel and/or property damage. Before inserting a memory card, always ensure that the CPU is offline and in a safe state.

Vérifiez que le processeur n'exécute pas activement un processus avant d'insérer la carte mémoire.

Si vous insérez une carte mémoire, la CPU passe en mode STOP, ce qui peut affecter le fonctionnement d'un processus ou d'une machine en ligne. Le fonctionnement inattendu d'un processus ou d'une machine peut entraîner la mort ou des blessures corporelles et / ou des dégâts matériels. Avant d'insérer une carte mémoire, assurez-vous toujours que la CPU est hors ligne et en sécurité.

11 Instructions for interconnection between Industrial Shields controllers

11.1 RS-232 Communication:

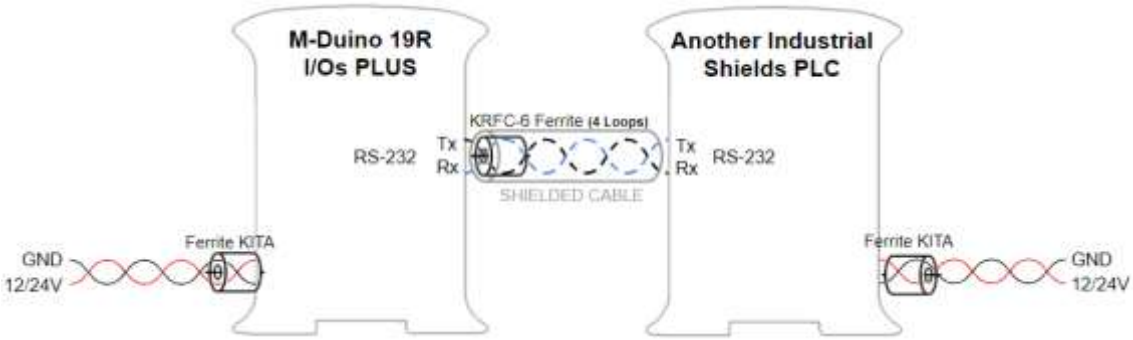

11.2 RS-485 Communication:

11.2.1.1 Half Duplex

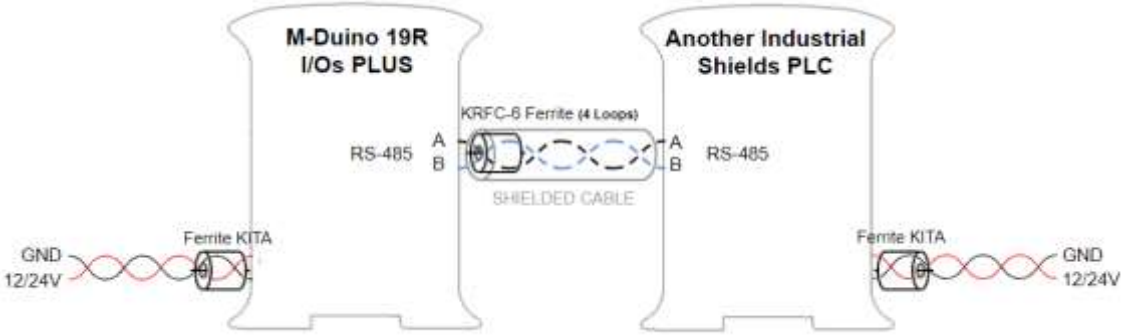

11.2.2 Full Duplex

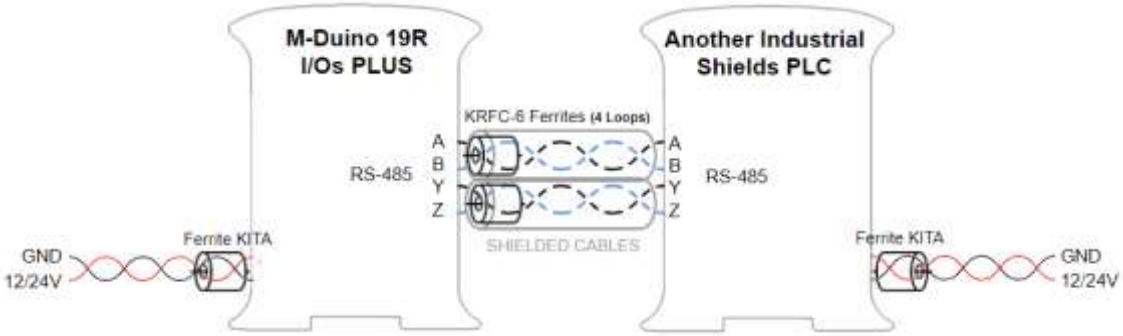

11.3 Ethernet

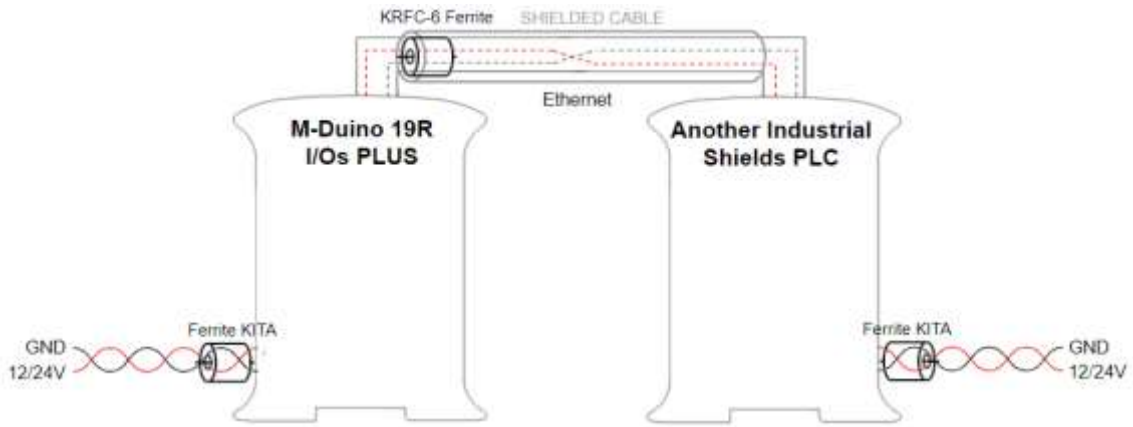

For an Ethernet communication between Industrial Shields equipment a **SFTP CAT-6 Ethernet crossover cable** must be used.

12 I/O technical details:

Digital Output Waveform:

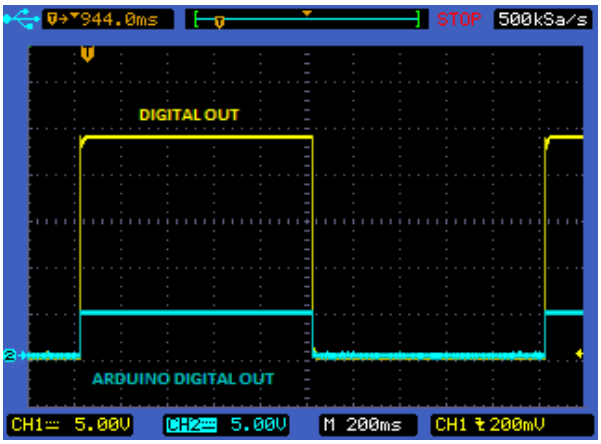

Digital Out-put Turn-off:

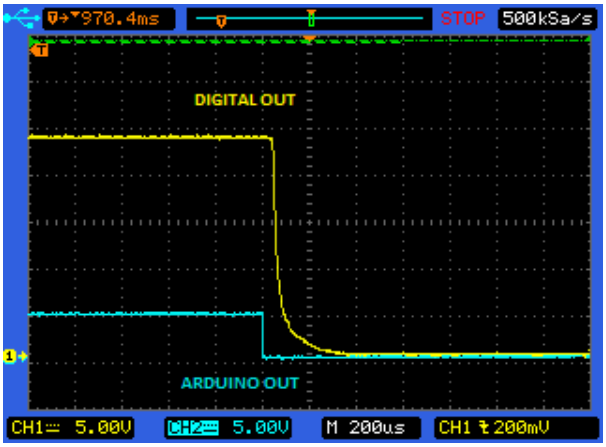

PWM Waveform:

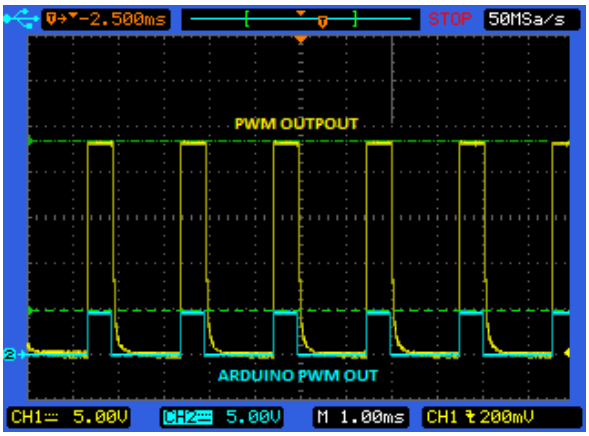

Analog Out Turn On:

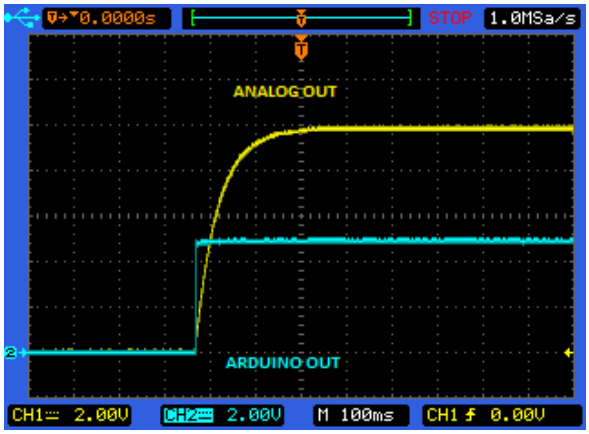

Analog Out Turn-Off:

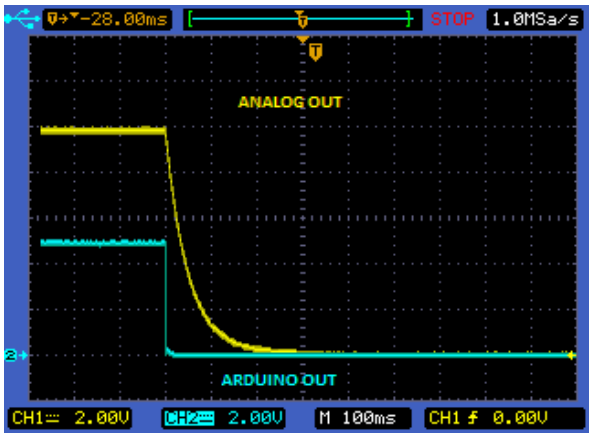

Analog /Digital input Turn-on:

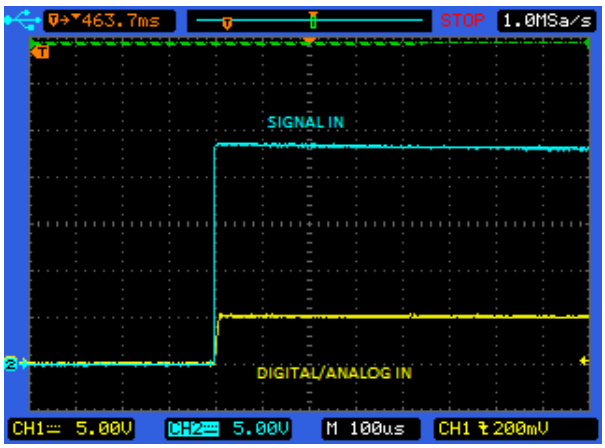

13 Typical Connections

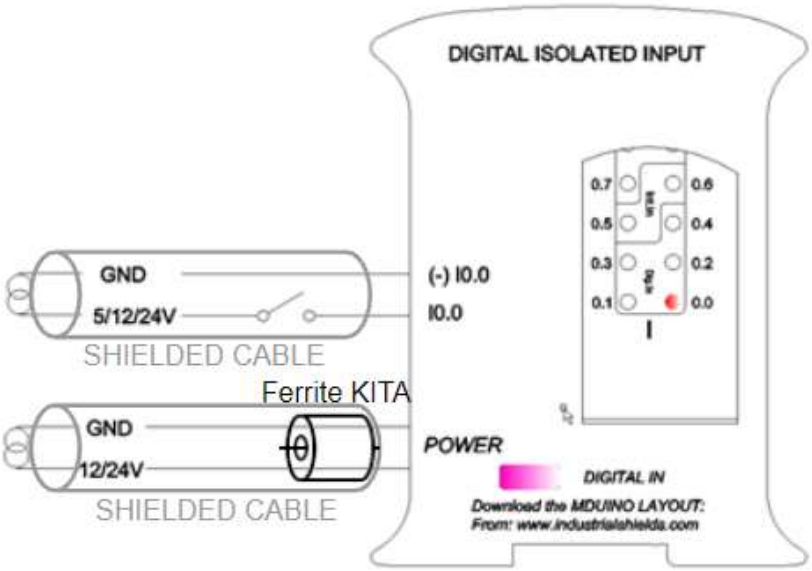

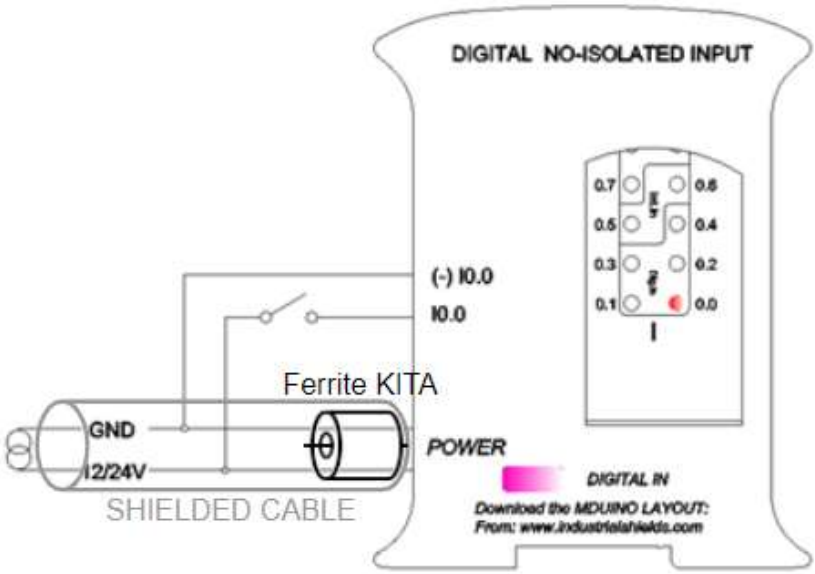

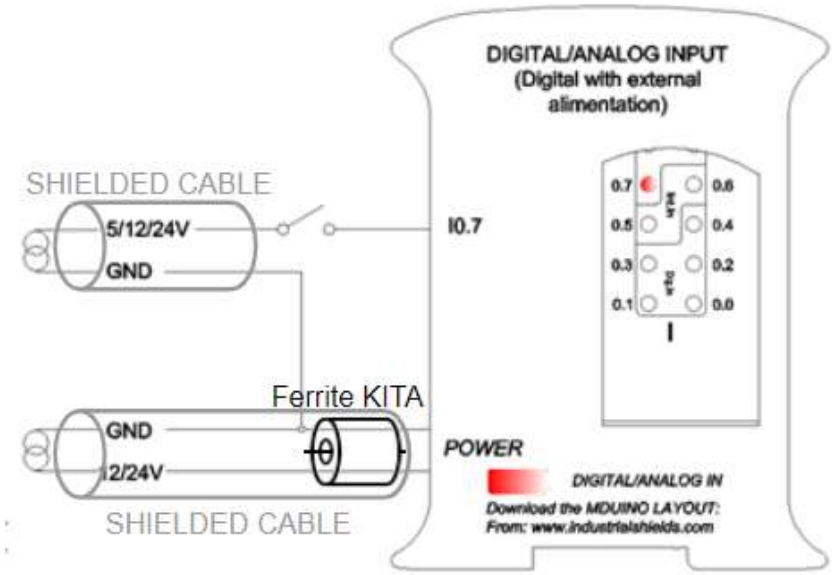
DIGITAL/ANALOG INPUT
(Digital with external alimentation)
SHIELDED CABLE
5/12/24V
GND
I0.7
Ferrite KITA
GND
12/24V
SHIELDED CABLE
POWER
DIGITAL/ANALOG IN
Download the MDUINO LAYOUT:
From: www.industrialshields.com

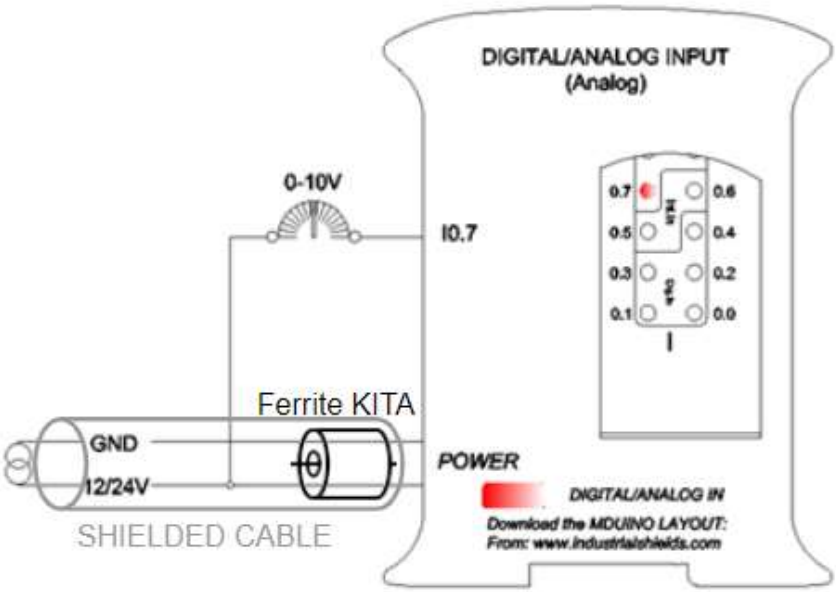
DIGITAL/ANALOG INPUT
(Analog)
0-10V
I0.7
Ferrite KITA
GND
12/24V
SHIELDED CABLE
POWER
DIGITAL/ANALOG IN
Download the MDUINO LAYOUT:
From: www.industrialshields.com

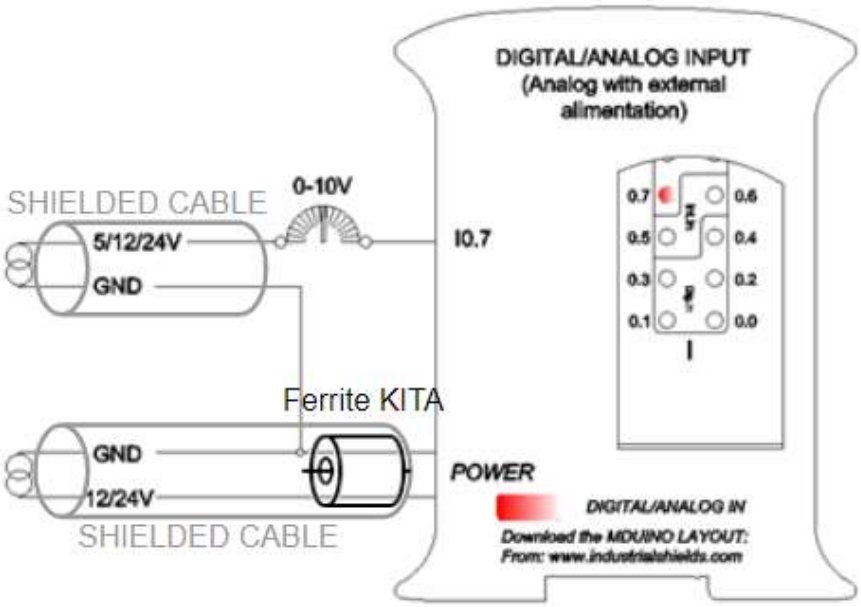
DIGITAL/ANALOG INPUT
(Analog with external alimentation)
SHIELDED CABLE
0-10V
5/12/24V
GND
I0.7
0.7
0.6
0.5
0.4
0.3
0.2
0.1
0.0
I
Ferrite KITA
GND
12/24V
SHIELDED CABLE
POWER
DIGITAL/ANALOG IN
Download the MDUINO LAYOUT:
From: www.industrialshields.com

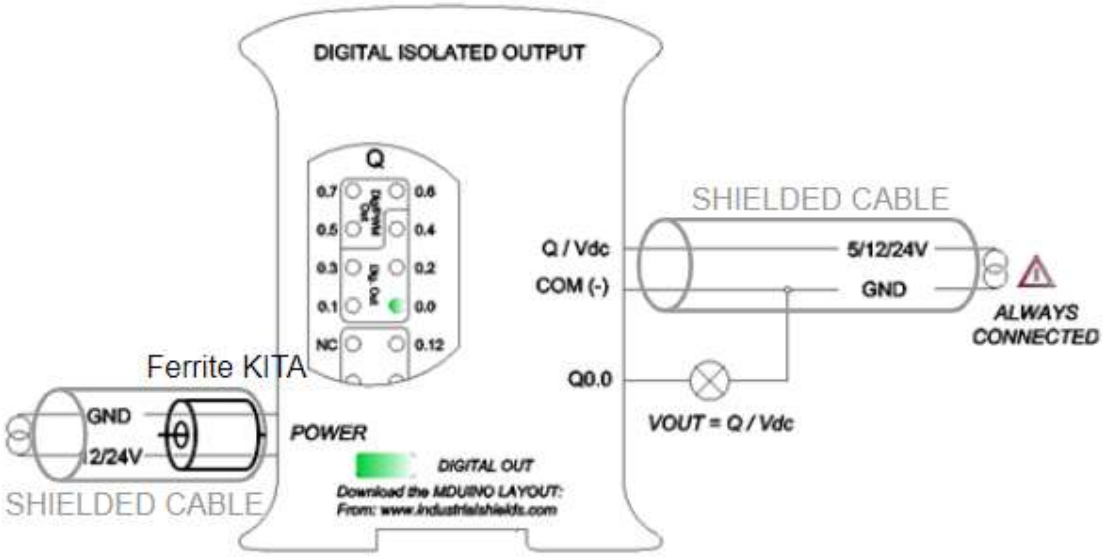
DIGITAL ISOLATED OUTPUT
Q
0.7
0.6
0.5
0.4
0.3
0.2
0.1
0.0
NC
0.12
SHIELDED CABLE
Q / Vdc
COM (-)
5/12/24V
GND
ALWAYS CONNECTED
Q0.0
VOUT = Q / Vdc
Ferrite KITA
GND
2/24V
SHIELDED CABLE
POWER
DIGITAL OUT
Download the MDUINO LAYOUT:
From: www.industrialshields.com

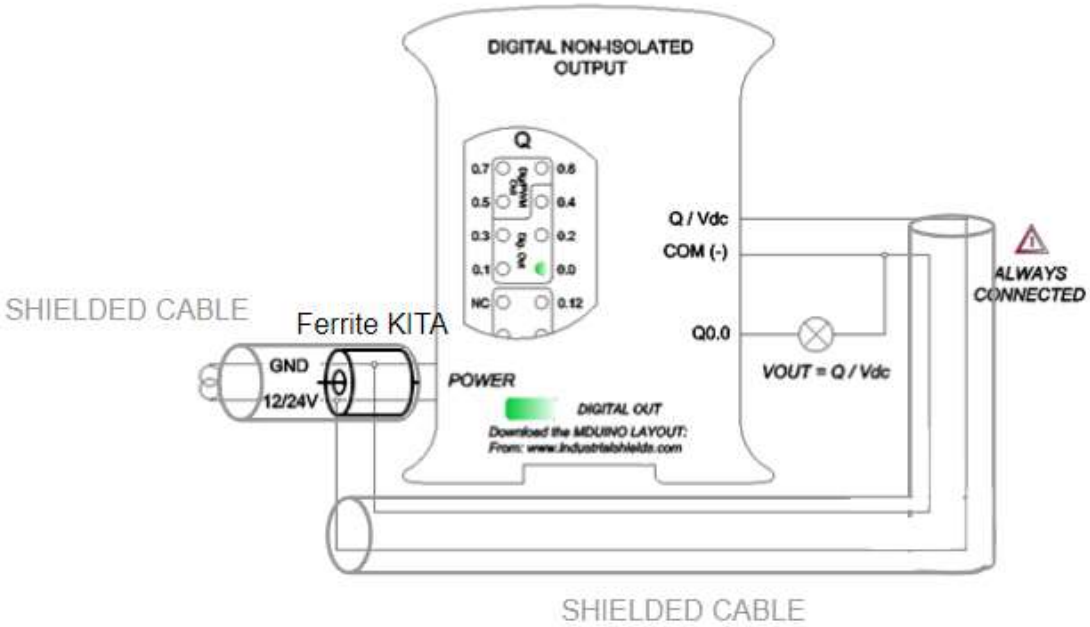
DIGITAL NON-ISOLATED OUTPUT
Q
0.7
0.6
0.5
0.4
0.3
0.2
0.1
0.0
NC
0.12
Q / Vdc
COM (-)
Q0.0
VOUT = Q / Vdc
ALWAYS CONNECTED
SHIELDED CABLE
Ferrite KITA
GND
12/24V
POWER
DIGITAL OUT
Download the MDUINO LAYOUT:
From: www.industrialshields.com
SHIELDED CABLE

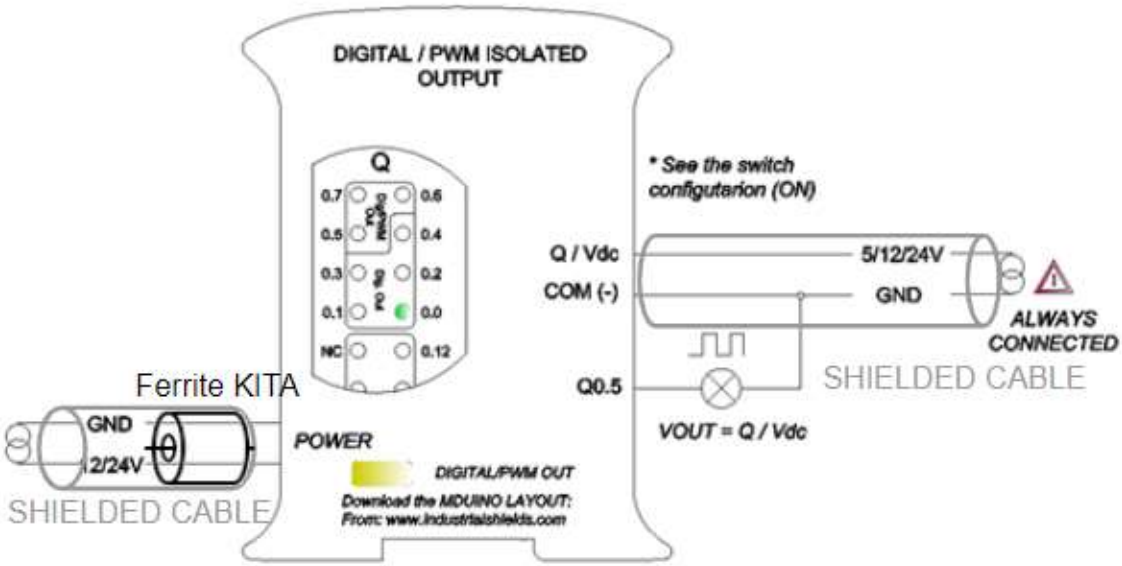
DIGITAL / PWM ISOLATED OUTPUT
Q
0.7
0.6
0.5
0.4
0.3
0.2
0.1
0.0
NC
0.12
* See the switch configuration (ON)
Q / Vdc
COM (-)
5/12/24V
GND
ALWAYS CONNECTED
SHIELDED CABLE
Q0.5
VOUT = Q / Vdc
Ferrite KITA
GND
12/24V
POWER
DIGITAL/PWM OUT
Download the MDUINO LAYOUT:
From: www.industrialshields.com
SHIELDED CABLE

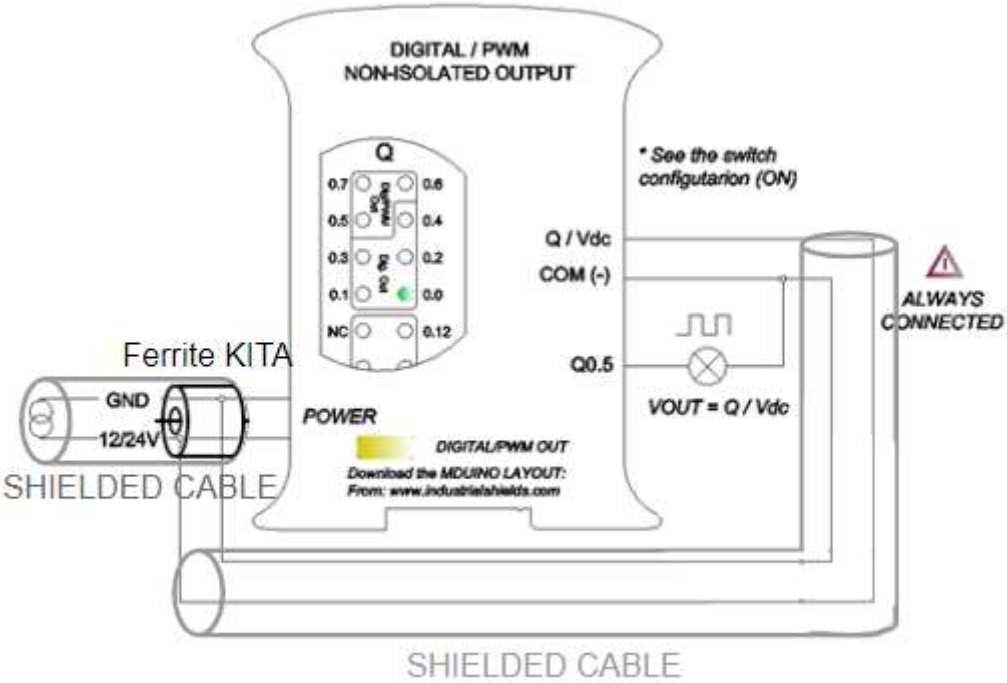
DIGITAL / PWM
NON-ISOLATED OUTPUT
Q
0.7
0.6
0.5
0.4
0.3
0.2
0.1
0.0
NC
0.12
* See the switch
configutarion (ON)
Q / Vdc
COM (-)
Q0.5
VOUT = Q / Vdc
ALWAYS
CONNECTED
Ferrite KITA
GND
12/24V
POWER
DIGITAL/PWM OUT
Download the MDUINO LAYOUT:
From: www.industrialshields.com
SHIELDED CABLE
SHIELDED CABLE

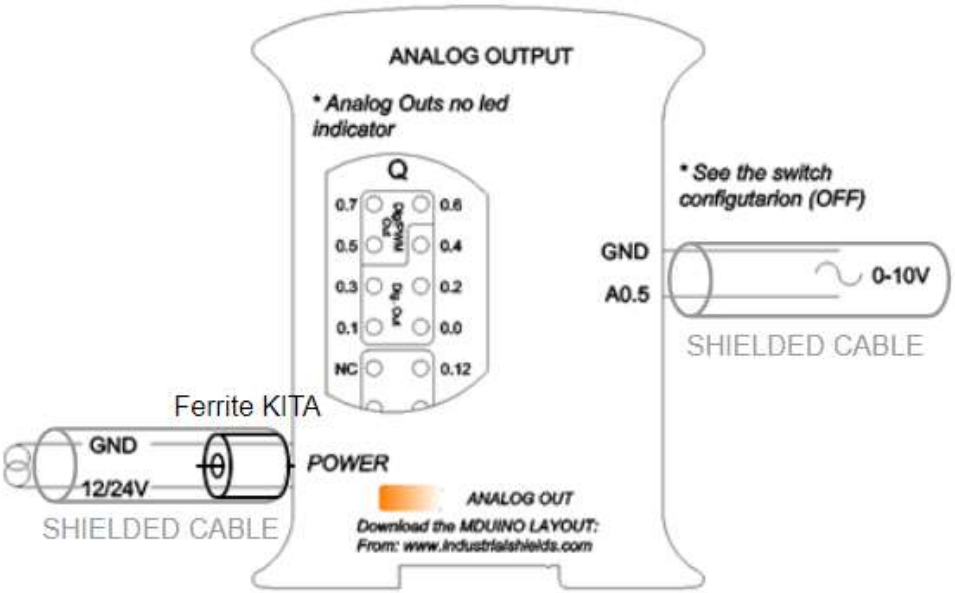
ANALOG OUTPUT
* Analog Outs no led
indicator
Q
0.7
0.6
0.5
0.4
0.3
0.2
0.1
0.0
NC
0.12
* See the switch
configutarion (OFF)
GND
A0.5
0-10V
SHIELDED CABLE
Ferrite KITA
GND
12/24V
POWER
ANALOG OUT
Download the MDUINO LAYOUT:
From: www.industrialshields.com
SHIELDED CABLE

14 Connector details:

The connector inside the PLCs that mounts on the PCB is MC 0,5/10-G-2,5 THT – 1963502 from Phoenix contact. MC0,5/10-G-2,5THT

For I/O and power supply there is a FK-MC 0,5/10-ST-2,5 - 1881406 connector from Phoenix contact. FK-MC 0,5/10-ST-2,5

Connection details:

Article reference	MC 0,5/10-G-2,5 THT
Height	8,1mm
Pitch	2,5mm
Dimension	22,5mm
Pin dimensions	0,8x0,8mm
Pin spacing	2,50mm

Article reference	FK-MC 0,5/10-ST-2,5
Rigid conduit section min.	0,14 mm²
Rigid conduit section max.	0,5 mm²
Flexible conduit section min.	0,14 mm²
Flexible conduit section max.	0,5 mm²
Conduit section AWG/kcmil min.	26
Conduit section AWG/kcmil max.	20

15 Mechanical Characteristics

- **Dimension :**

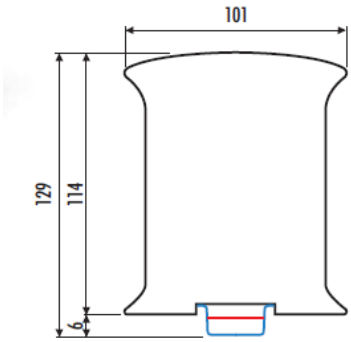

- **DIN Rail mounting**

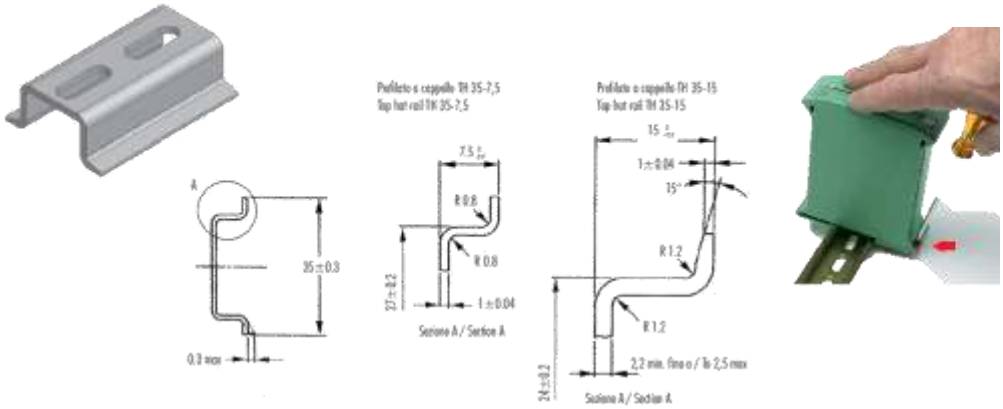

CARATTERISTICHE		METODO	UNITA' DI MISURA	BLEND PC/ABS
Meccaniche	Resistenza a trazione allo snervamento	ASTM D638	MPa	48
	Resistenza a trazione a rottura	ASTM D638	MPa	48
	Allungamento a rottura	ASTM D638	%	59
	Modulo in flessione	ASTM D790	MPa	2094
	Prova Izod con intaglio	ISO 180/1A	KJ/m²	5,5
Termiche	Temp. di rammollimento Vicat, metodo B	ASTM D1525	°C	114
	Temperatura Ritorto 1,81 MPa	ASTM D648	°C	97
Fisiche	Peso specifico	ASTM D792	g/cm3	1,21
	Ritiro nello stampo	ASTM D955	%	0,4/0,6
	Melt Flow Index 260°C - 90N	ASTM D1238	gr/10'	10,1
Comportamento alla Fiamma	Autoestinguenza (min di spessore)	UL94	-	V-0 (0,8)
	Filo incandescente, 3,2 mm	IEC695.2.1	°C	960

Italtronic si riserva il diritto di modificare il materiale con cui realizza i propri prodotti senza obbligo di preavviso.

FEATURES		TEST METHOD	UNITS	BLEND PC/ABS
Mechanical test	Resistance to tensile stress at yield	ASTM D638	MPa	48
	Tensile strength	ASTM D638	MPa	48
	Ultimate elongation	ASTM D638	%	59
	Flexing modulus	ASTM D790	MPa	2094
	Izod test notched	ISO 180/1A	KJ/m²	5,5
Thermal test	Vicat softening temperature method B	ASTM D1525	°C	114
	Deflecting temperature 1,81 MPa	ASTM D648	°C	97
Physical test	Specific gravity	ASTM D792	g/cm3	1,21
	Mould shrinkage	ASTM D955	%	0,4/0,6
	Melt Flow Index 260°C - 90N	ASTM D1238	gr/10'	10,1
Flame test	Self extinguisher (thickness in mm)	UL94	-	V-0 (0,8)
	Incandescent wire 3,2 mm	IEC695.2.1	°C	960

Italtronic can operate any change of the materials without being obliged to forewarn.

For optimal operation of the product, it must be located in an electrical cabinet with IK08 mechanical protection. The minimum IP protection degree required is IP56.

16 Installation and Maintenance

Notes for installation:

- The installation position should be free from the following: dust or oil smoke, conductive dust, corrosive or flammable gas, high temperature, condensation, and rain.
- Besides, vibration and impact also affect the PLC normal operation and shorten its lifespan; electric shock, fire or misact also damages the product. During drilling or wiring, prevent the metal particles or wire segments from falling into the PLC casing, which may cause fire, fault or misact.
- After the PLC installation, clean the ventilation duct to prevent blocking, which may cause bad ventilation, or even fire, faults or misact.
- Do not online connect, plug or unplug cables, which is apt to cause electric shock or damage the circuit. Installation and wire connection must be firm and reliable. Poor connection could cause misact.
- Use shielded twisted pair for the I/O of high frequency signal and analog signal to improve system IMS.

The installation environment should be free from dust, oil smoke, conductive particle, corrosive or flammable gases, high temperature, condensation, and rain.

Besides, vibration and impact also affect the PLC normal operation and shorten its lifespan. It is recommended to install the PLC, together with the matching switches and contactors, in a dedicated electric cabinet and keep the cabinet ventilated. If the location has high ambient temperature or heat generating equipment nearby, install forced convection devices on top or sides of the cabinet to avoid over-temperature. During drilling or wiring, prevent the metal particles or wire segments from falling into the PLC casing, which may cause fire, fault or misact. After the PLC installation, clean the ventilation duct to prevent blocking, which may cause bad ventilation, or even fire, faults or misact.

The only way to disconnect the equipment from the electrical network is by removing the connectors that feed the equipment. Once installed in the electrical cabinet it is very important to ensure the power connectors for proper operation.

Separate the M-Duino 19R I/Os PLUS from heat, high voltage and electrical noise:

Always separate the devices that generate high voltage and high electrical noise from the M-Duino 19R I/Os PLUS. When configuring the layout of the M-Duino 19R I/Os PLUS inside your panel, consider the heat-generating devices and locate the electronic-type devices in the cooler areas of your cabinet. Reducing the exposure to a high-temperature environment will extend the operating life of any electronic device. Consider also the routing of the wiring for the devices in the electric cabinet. Avoid placing low-voltage signal wires and communications cables in the same tray with AC power wiring and high-energy, rapidly-switched DC wiring.

Provide adequate clearance for cooling and wiring M-Duino 19R +

I/Os PLUS. Is designed for natural convection cooling. For proper cooling, you must provide a clearance of at least 25 cm above and below the devices. Also, allow at least 25 cm of depth between the front of the modules and the inside of the enclosure.

Notes for maintenance:

A well-planned and executed maintenance program is essential for the satisfactory operation of solid-state electrical equipment. The kind and frequency of the maintenance operation will vary with the kind and complexity of the equipment as well as with the nature of the operating conditions. Maintenance recommendations of the manufacturer or appropriate product standards should be followed.

The following factors should be considered when formulating a maintenance program:

- Maintenance must be performed by qualified personnel familiar with the construction, operation, and hazards involved with the control.
- Maintenance should be performed with the control out of operation and disconnected from all sources of power.
- Care should be taken when servicing electrostatic sensitive components. The manufacturer's recommendations for these components should be followed.
- Ventilation passages should be kept open. If the equipment depends upon auxiliary cooling, e.g., air, water, or oil, periodic inspection (with filter replacement when necessary) should be made of these systems.
- The means employed for grounding or insulating the equipment from ground should be checked to assure its integrity.
- Accumulations of dust and dirt on all parts, including on semiconductor heat sinks, should be removed according to the manufacturer's instructions, if provided; otherwise, the manufacturer should be consulted. Care must be taken to avoid damaging any delicate components and to avoid displacing dust, dirt, or debris in a way that permits it to enter or settle into parts of the control equipment.
- Enclosures should be inspected for evidence of deterioration. Accumulated dust and dirt should be removed from the top of the enclosures before opening doors or removing covers.
- Certain hazardous materials removed as part of maintenance or repair procedure (e.g., polychlorinated biphenyls (PCBs) found in some liquefied capacitors) must be disposed of as described in Federal regulations.

Safety rules for maintenance personnel

Consider the following steps to follow. A false manoeuvre could be the cause of an accident or material damage.
Do not disassemble or modify the modules. This could lead to breakdowns or malfunctions and could lead to injuries or fire.

- All types of radio communication devices, including mobile phones and personal handy-phone systems (PHS), must be kept more than **25cm** away from the PLC in all directions. Failure to observe this precaution exposes malfunctions caused by excess of temperature.
- Disconnect the external power supply of the system (on all phases) before connecting or disconnecting a module. Failure to observe this precaution may cause faults or malfunctions of the module.

- Tighten the screws of the terminal ports and the screws of the connectors within the prescribed tightening torque. Insufficient tightening can lead to loose parts or wires and cause malfunctions. Excessive tightening can damage the screws and / or the module, with the risk of falling, short circuits and malfunctions.
- Before handling a module, dispose of the electrostatic charge accumulated by the human body by touching a suitable conductive object. Failure to observe this precaution may cause faults or malfunctions of the module.

Repair note:

If the equipment is suitable to be repaired, it must be verified that the equipment remains in a safe state after repair.

17 Revision Table

Revision Number	Date	Changes
0	30/08/2019	First implementation
1	13/08/2020	Correction of technical details

About Industrial Shields:

Direction: Fàbrica del Pont, 1-11

Zip/Postal Code: 08272

City: Sant Fruitós de Bages (Barcelona)

Country: Spain

Telephone: (+34) 938 760 191 / (+34) 635 693 611

Mail: industrialshields@industrialshields.com