MEDER electronic
Products for tomorrow...

Europe: +49 / 7731 8399 0 | Email: info@meder.com
USA: +1 / 508 295 0771 | Email: salesusa@meder.com
Asia: +852 / 2955 1682 | Email: salesasia@meder.com

Item No.:
2112902025
Item:
KSK-1C90F-2025

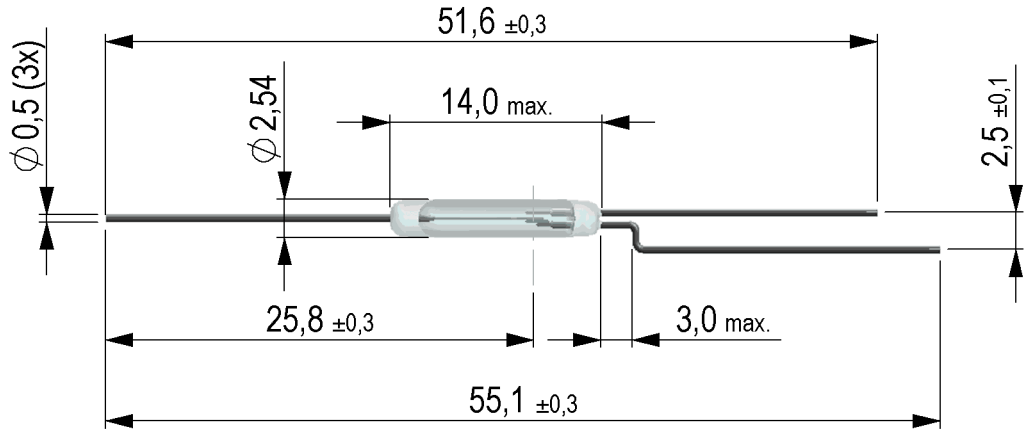

tolerances according to DIN ISO 2768 m

Magnetic properties	Conditions	Min	Typ	Max	Unit
Pull-In excitation (Reference value)	Reed switch unmodified measured in coil- "define operation"	20		25	AT
Test-Coil	Reed switch unmodified		KMS-01		

Contact data 90	Conditions	Min	Typ	Max	Unit
Contact-No.			90		
Contact-form			C		
Contact-material			Rhodium		
Contact rating	Any DC combination of V & A not to exceed their individual max.'s			10	W
Switching voltage	DC or Peak AC/ with 40% overdrive			175	V
Switching current	DC or Peak AC/with 40% overdrive			0,5	A
Carry current	DC or Peak AC/ with 40% overdrive			1	A
Contact resistance static	Measured with 40% overdrive Start Value			150	mOhm
Contact resistance dynamic	Maximum value 1,5 ms after excitation Start Value			250	mOhm
Insulation resistance	RH <45 %, 100 V test voltage	1			GOhm
Breakdown voltage	according to IEC 255-5	200			VDC
Operate time, incl. bounce	measured with 40% overdrive			0,7	ms
Release time	measured with no coil excitation			1,5	ms
Capacity	@ 10 kHz across open switch		1		pF

Contact dimensions C	Conditions	Min	Typ	Max	Unit
Overall length over NC	Tolerance according to drawing		55,1		mm
Glass body length	Tolerance according to drawing		14		mm

Environmental data	Conditions	Min	Typ	Max	Unit
Shock	1/2 sine wave duration 11ms			50	g
Vibration	from 10 - 2000 Hz			20	g
Operating temperature		-40		130	°C
Storage temperature		-55		130	°C
Soldering temperature	wave soldering max. 5 sec			260	°C

sales@prom-elec.com / ООО ПРОМЭЛЕКТРОНИКА