LCD TFT Module Specification

Riverdi
our pixels behave

RVT4.3A480272CNWC36

LCD TFT Datasheet

Rev.2.1.0

2017-11-21

ITEM	CONTENTS	UNIT
LCD Type	TFT/Transmissive/Normally white	/
Size	4.3	Inch
Viewing Direction	12:00 (without image inversion)	O' Clock
Gray Scale Inversion Direction	6:00	O' Clock
LCM (W × H × D)	105.50 × 67.20 × 8.20	mm^3
Active Area (W × H)	95.04 × 53.86	mm^2
Dot Pitch (W × H)	0.066 × 0.198	mm^2
Number of Dots	480 (RGB) × 272	/
Driver IC	SSD1963	/
Backlight Type	10 LEDs	/
Surface Luminance	500	cd/m^2
Interface Type	Parallel 8/16b (i80 by default)	/
Color Depth	16.7M	/
Pixel Arrangement	RGB Vertical Stripe	/
Surface Treatment	Anti-glare	/
Input Voltage	3.3	V
With/Without TSP	Projected Capacitive Touch Panel	/
Weight	72	g

Note 1: RoHS compliant

Note 2: LCM weight tolerance: ± 5%.

sales@prom-elec.com / ООО ПРОМЭЛЕКТРОНИКА

REVISION RECORD

REVNO.	REVDATE	CONTENTS	REMARKS
1.0	2014-11-12	Initial Release	
1.1	2014-11-26	Update mechanical drawing	
1.2	2014-12-19	Update interface description table	
1.3	2015-01-19	Update LED lifetime	
1.4	2015-06-12	Update Surface Treatment	
1.5	2015-08-27	Adding PIN numbering in the mechanical drawing	
1.6	2016-08-12	Added Inspection Standards	
2.0.0	2017-05-30	Glass change, new TFT open dimension, FFC shape, new TFT IC controller	
2.1.0	2017-11-21	Updated Electrical Characteristics	

CONTENTS

REVISION RECORD 2
CONTENTS 3
1 MODULE CLASSIFICATION INFORMATION 4
2 MODULE DRAWING 4
3 ABSOLUTE MAXIMUM RATINGS 5
4 ELECTRICAL CHARACTERISTICS 5
5 ELECTRO-OPTICAL CHARACTERISTICS 5
6 INTERFACE DESCRIPTION 7
7 INTERFACE TIMING CHARACTERISTICS 8
7.1 8080 Mode 8
7.2 Pixel Data Format 8
7.3 Parallel 8080-series Interface Timing 8
8 LCD TIMING CHARACTERISTICS 9
8.1 Clock and data input time diagram 9
8.2 Parallel RGB input timing table 10
9 CAPACITIVE TOUCH SCREEN PANEL SPECIFICATIONS 10
9.1 Mechanical characteristics 10
9.2 Electrical characteristics 10
9.3 Interface timing characteristics 10
9.4 I2C Read/Write Interface Description 11
9.5 Communication of the I^2C interface with Host 11
9.6 Touch data read protocol 12
9.7 Data description. 13
9.8 Interrupt Trigger Mode 14
10 INSPECTION 15
10.1 Inspection condition 15
10.2 Inspection standard 16
11 RELIABILITY TEST 19
12 LEGAL INFORMATION 20

1 MODULE CLASSIFICATION INFORMATION

RV	T	4.3	A	480272	C	N	W	C	36
1.	2.	3.	4.	5.	6.	7.	8.	9.	10.

1.	**BRAND**	**RV** – Riverdi
2.	**PRODUCT TYPE**	**T – TFT Standard** **F** – TFT Custom
3.	**DISPLAY SIZE**	**3.5** – 3.5” **4.3 – 4.3”** **5.7** – 5.7” **7.0** – 7.0”
4.	**MODEL SERIAL NO.**	**A (A-Z)**
5.	**RESOLUTION**	**320240** – 320x240 px **480272 – 480x272 px** **800480** – 800x480 px
6.	**INTERFACE**	**T** – TFT LCD, RGB **L** – TFT LCD, LVDS **C – TFT + Controller**
7.	**FRAME**	**N – No Frame** **F** – Mounting Frame
8.	**BACKLIGHT TYPE**	**W – LED White**
9.	**TOUCH PANEL**	**N** – No Touch Panel **R** – Resistive Touch Panel **C – Capacitive Touch Panel**
10.	**VERSION**	**36** (00-99)

PIN	DESC
1	GND
2	VDD
3	BL_E
4	D/C
5	WR
6	RD
7	D0
8	D1
9	D2
10	D3
11	D4
12	D5
13	D6
14	D7
15	D8
16	D9
17	D10
18	D11
19	D12
20	D13
21	D14
22	D15
23	NC
24	NC
25	CS
26	RESET
27	DISP ON
28	NC
29	XL
30	YU
31	XR
32	YD
33	VLED-
34	VLED-
35	VLED+
36	VLED+

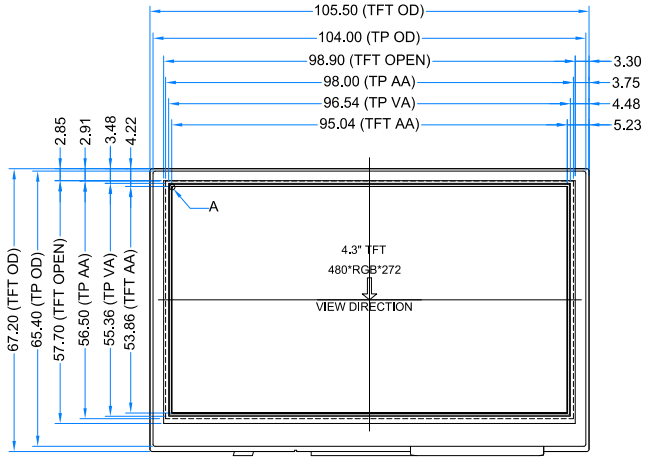

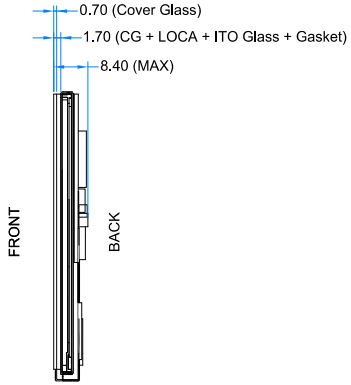

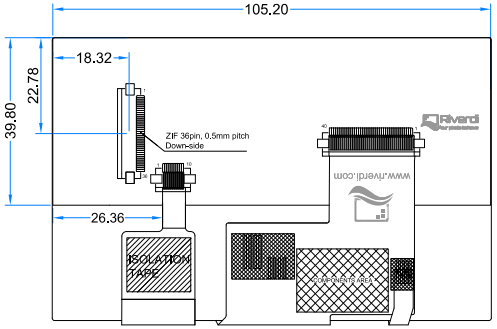

DETAIL A 60:1

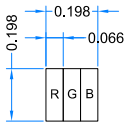

INTERNAL BACKLIGHT
CIRCUIT DIAGRAM

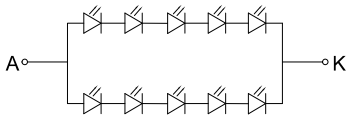

NOTES:

1. DISPLAY TYPE:	TFT, TRANSMISSIVE, NORMALLY WHITE
2. RESOLUTION:	480x272
3. VIEWING DIRECTION:	12 O'CLOCK
4. IC CONTROLLER:	SSD1963QL9
5. OPERATING TEMP.:	-20°C ~ 70°C
6. STORAGE TEMP.:	-30°C ~ 80°C
7. LED BACKLIGHT:	10-LED WHITE
8. SURFACE LUMINANCE:	500 cd/m^2
9. OPERATING VOLTAGE:	3.3V
10. GENERAL TOLERANCE:	±0.2
11. RoHS COMPLIANT	

Ver.	DESCRIPTION	DATE
2.0.0	Glass change, new TFT open dimension, FFC shape. New IC controller and updated pinout.	2017.05.30

CUSTOMER APVL		DATE	2017/05/30
DRAWN	SCALE	TITLE	RVT4.3B480272CNWC36
DFTG CHK	UNIT mm		
ENGR CHK		MODEL	
APPROVAL			
RIVERDI SP. Z O.O.		DWG NO Rev. 2.0.0	PAGE 1/1

3 ABSOLUTE MAXIMUM RATINGS

PARAMETER	SYMBOL	MIN	MAX	UNIT
Supply Voltage for Logic	VDD	-0.3	4.6	V
Input Voltage for Logic	VIN	-0.3	VDD	V
Input Voltage for LED Inverter	BLVDD	-0.3	7.0	V
Operating Temperature	T_{OP}	-20	70	°C
Storage Temperature	T_{ST}	-30	80	°C
Humidity	RH	-	90% (Max 60°C)	RH

4 ELECTRICAL CHARACTERISTICS

PARAMETER	SYMBOL	MIN	TYP	MAX	UNIT	NOTES
Supply Voltage for Module	VDD	3.0	3.3	3.6	V	
Input Voltage for LED Inverter	BLVDD	2.8	3.3	5.5	V	
Input Voltage 'H' level for BL_E pin	BL_E_H	1.5	-	5.5	V	
Input Voltage 'L' level for BL_E pin	BL_E_L	0	-	0.7		
Input Current (Exclude LED Backlight)	IDD	-	31	39	mA	VDD = 3.3V
LED Backlight Current	$IDD_{backlight}$		265	332	mA	BLVDD=3.3V
LED Backlight Current	$IDD_{backlight}$		156	195	mA	BLVDD=5V
Total Input Current (Include LED Backlight 100%)	IDD_{total}	-	296	371	mA	BLVDD=3.3V
Input Voltage ' H ' level	V_{IH}	0.7VDD	-	VDD	V	
Input Voltage ' L ' level	V_{IL}	0	-	0.2VDD	V	
LED Life Time	-	30000	50000	-	Hrs	Note 1

Note 1: The LED life time is defined as the module brightness decrease to 50% original brightness at Ta=25°C.

5 ELECTRO-OPTICAL CHARACTERISTICS

ITEM		SYMBOL	CONDITION	MIN	TYP	MAX	UNIT	REMARK	NOTE
Response Time		Tr+Tf	θ=0° Ø=0° Ta=25	-	20	30	ms	Figure 1	4
Contrast Ratio		Cr		320	400	-	---	Figure 2	1
Luminance Uniformity		δ WHITE		80	-	-	%	Figure 2	3
Surface Luminance		Lv		440	550	-	cd/m^2	Figure 2	2
Viewing Angle Range		θ	Ø = 90°	35	50	-	deg	Figure 3	6
			Ø = 270°	55	70	-	deg	Figure 3	
			Ø = 0°	55	70	-	Deg	Figure 3	
			Ø = 180°	55	70	-	Deg	Figure 3	
CIE (x, y) Chromaticity	Red	x	θ=0° Ø=0° Ta=25	0.570	0.620	0.670	Figure 2		5
		y		0.294	0.344	0.394			
	Green	x		0.256	0.306	0.356			
		y		0.513	0.563	0.613			
	Blue	x		0.083	0.133	0.183			
		y		0.099	0.149	0.199			
	White	x		0.250	0.300	0.350			
		y		0.280	0.330	0.380			

Note 1. Contrast Ratio(CR) is defined mathematically as below, for more information see Figure 1.

$$\text{Contrast Ratio} = \frac{\text{Average Surface Luminance with all white pixels (P1, P2, P3, P4, P5)}}{\text{Average Surface Luminance with all black pixels (P1, P2, P3, P4, P5)}}$$

Note 2. Surface luminance is the LCD surface from the surface with all pixels displaying white. For more information see Figure 2.

Lv = Average Surface Luminance with all white pixels (P1, P2, P3, P4, P5)

Note 3. The uniformity in surface luminance δ WHITE is determined by measuring luminance at each test position 1 through 5, and then dividing the maximum luminance of 5 points luminance by minimum luminance of 5 points luminance. For more information see Figure 2.

$$\delta\ \text{WHITE} = \frac{\text{Minimum Surface Luminance with all white pixels (P1, P2, P3, P4, P5)}}{\text{Maximum Surface Luminance with all white pixels (P1, P2, P3, P4, P5)}}$$

Note 4. Response time is the time required for the display to transition from white to black (Rise Time, Tr) and from black to white (Decay Time, Tf). For additional information see FIG 1. The test equipment is Autronic-Melchers's ConoScope series.

Note 5. CIE (x, y) chromaticity, the x, y value is determined by measuring luminance at each test position 1 through 5, and then make average value.

Note 6. Viewing angle is the angle at which the contrast ratio is greater than 2. For TFT module the contrast ratio is greater than 10. The angles are determined for the horizontal or x axis and the vertical or y axis with respect to the z axis which is normal to the LCD surface. For more information see Figure 3.

Note 7. For viewing angle and response time testing, the testing data is based on Autronic-Melchers's ConoScope series. Instruments for Contrast Ratio, Surface Luminance, Luminance Uniformity, CIE the test data is based on TOPCON's BM-5 photo detector.

Figure 1. The definition of response time

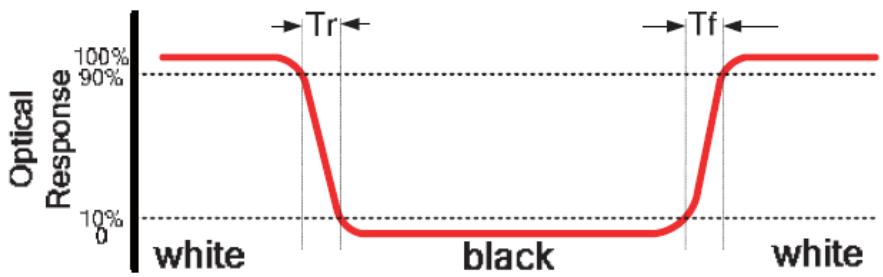

Figure 2. Measuring method for Contrast ratio, surface luminance, Luminance uniformity, CIE (x,y) chromaticity

A : 5 mm
B : 5 mm
H, V : Active Area
Light spot size ∅=5mm, 500mm distance from the LCD surface to detector lens
measurement instrument is TOPCON's luminance meter BM-5

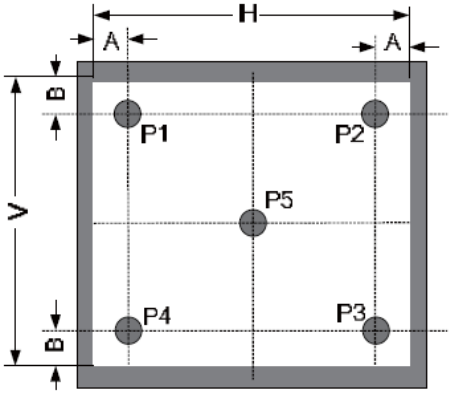

Figure 3.The definition of viewing angle

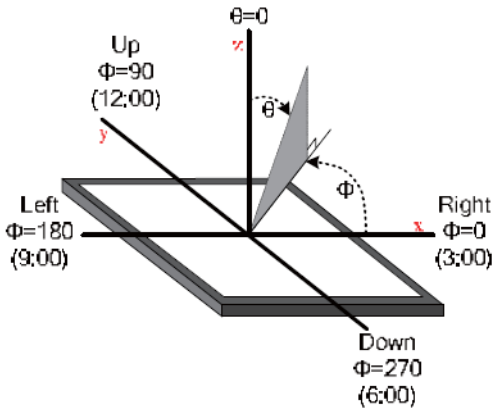

6 INTERFACE DESCRIPTION

PIN NO.	SYMBOL	I/O	DESCRIPTION
1	GND	P	Power Ground
2	VDD	P	Power Supply: +3.3V
3	BL_E	I	Backlight Control Signal, H: On/L: Off (internally pulled-up to BLVDD)
4	D/C	I	Data/Command Select
5	WR	I	Write Strobe Signal
6	RD	I	Read Strobe Signal
7-22	D0-D15	I	Data Bus. Pins not used should be floating.
23	NC	-	No Connection
24	TP_INT	-	Touch Panel INT
25	CS	I	Chip Select
26	RESET	I	Hardware reset
27	DISP ON	I	Display Control H: On/L: Off (internally pulled-up)
28	NC	-	No Connection
29	TP_SCL	-	Touch Panel I2C SCL Signal
30	TP_SDA	-	Touch Panel I2C SDA Signal
31	TP_RST	-	Touch Panel RST Signal, Active Low
32	TP_WAKE	-	Touch Panel Wake Signal, Active Low
33	BLGND	-	Backlight ground, can be connected to GND
34	BLGND	-	Backlight ground, can be connected to GND
35	BLVDD	-	Backlight power supply, can be connected to VDD
36	BLVDD	-	Backlight power supply, can be connected to VDD

7 INTERFACE TIMING CHARACTERISTICS

7.1 8080 Mode

The 8080 mode MCU interface consist of CS#, D/C#, RD#, WR#, D[15:0]. This interface use WR# to define a write cycle and RD# for read cycle. If the WR# goes low when the CS# signal is low, the data or command will be latched into the system at the rising edge of WR#. Similarly, the read cycle will start when RD# goes low and end at the rising edge of RD#.

7.2 Pixel Data Format

Interface	Cycle	D[17]	D[16]	D[15]	D[14]	D[13]	D[12]	D[11]	D[10]	D[9]	D[8]	D[7]	D[6]	D[5]	D[4]	D[3]	D[2]	D[1]	D[0]
16 bits (565 format)	1st			R5	R4	R3	R2	R1	G5	G4	G3	G2	G1	G0	B5	B4	B3	B2	B1
16 bits	1st			R7	R6	R5	R4	R3	R2	R1	R0	G7	G6	G5	G4	G3	G2	G1	G0
	2nd			B7	B6	B5	B4	B3	B2	B1	B0	R7	R6	R5	R4	R3	R2	R1	R0
	3rd			G7	G6	G5	G4	G3	G2	G1	G0	B7	B6	B5	B4	B3	B2	B1	B0
12 bits	1st							R7	R6	R5	R4	R3	R2	R1	R0	G7	G6	G5	G4
	2nd							G3	G2	G1	G0	B7	B6	B5	B4	B3	B2	B1	B0
9 bits	1st										R5	R4	R3	R2	R1	R0	G5	G4	G3
	2nd										G2	G1	G0	B5	B4	B3	B2	B1	B0
8 bits	1st											R7	R6	R5	R4	R3	R2	R1	R0
	2nd											G7	G6	G5	G4	G3	G2	G1	G0
	3rd											B7	B6	B5	B4	B3	B2	B1	B0

7.3 Parallel 8080-series Interface Timing

Figure 4. Parallel 8080-series Interface Timing Diagram (Write Cycle)

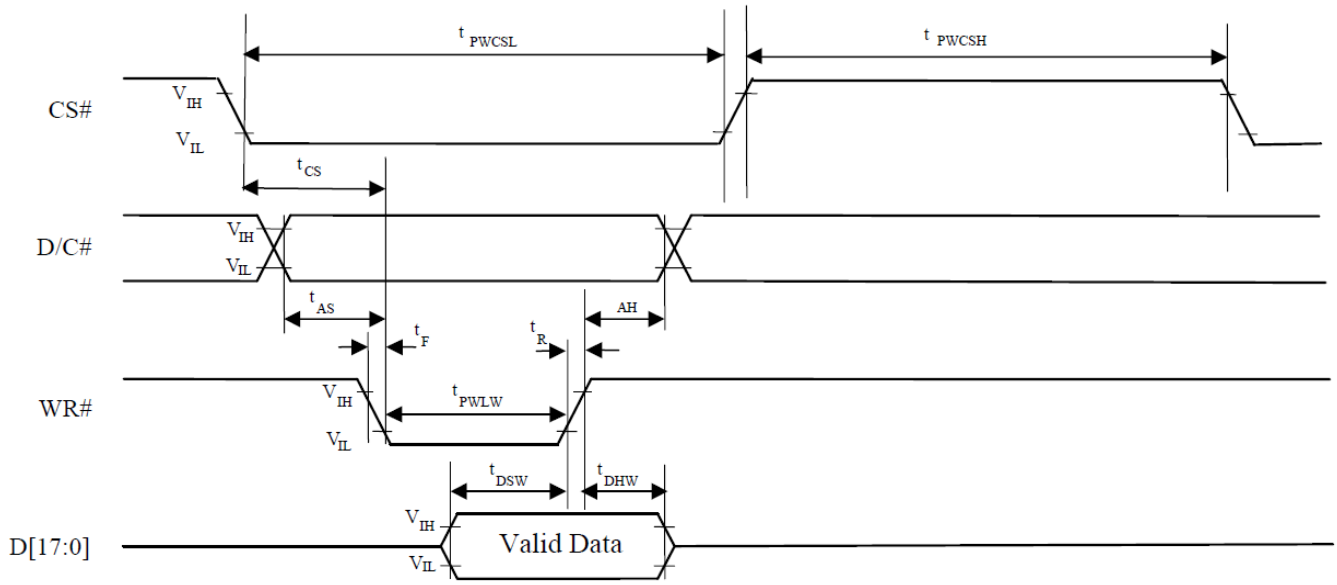

Figure 5.Parallel 8080-series Interface Timing Diagram (Read Cycle)

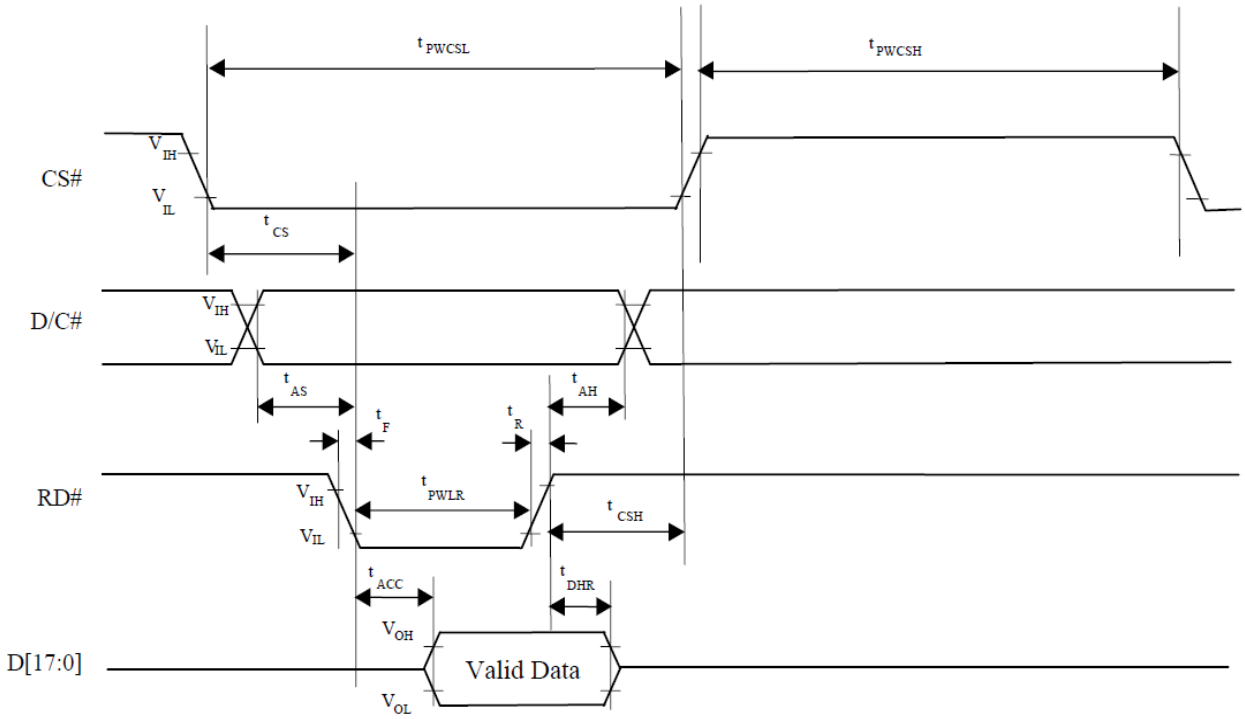

8 LCD TIMING CHARACTERISTICS

8.1 Clock and data input time diagram

Figure 6. Clock and data input time diagram

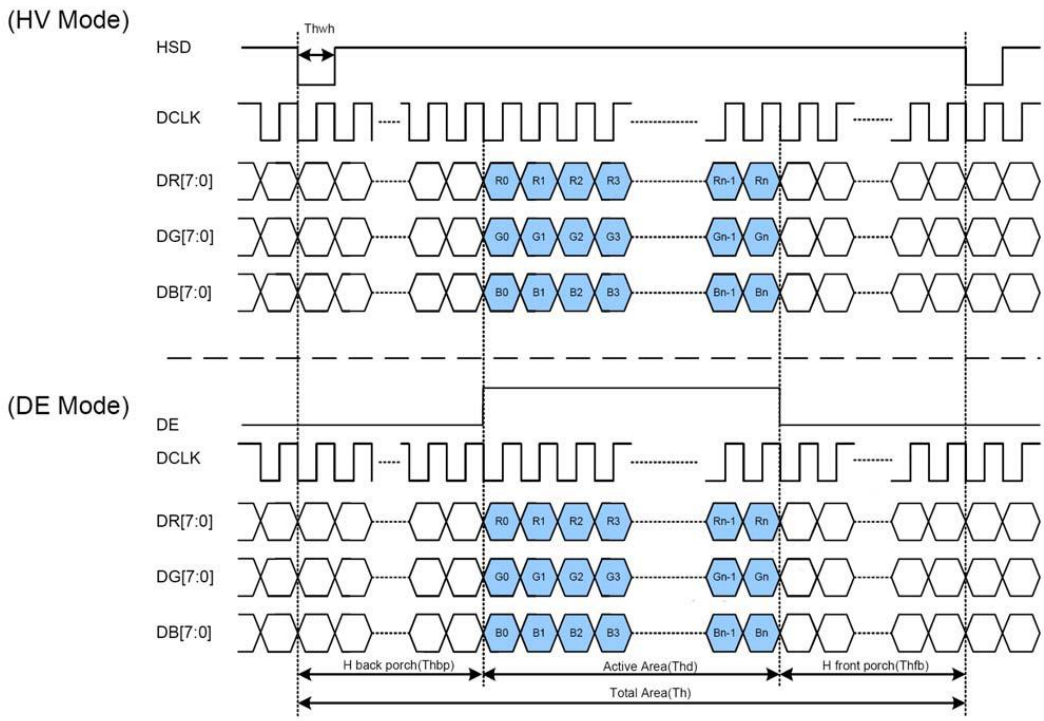

8.2 Parallel RGB input timing table

PARAMETER	SYMBOL	MIN	TYP	MAX	UNIT
DCLK Frequency	Fclk	5	9	12	MHz
VSD Period Time	Tv	277	288	400	H
VSD Display Area	Tvd		272		H
VSD Back Porch	Tvb	3	8	31	H
VSD Front Porch	Tvfp	2	8	97	H
HSD Period Time	Th	520	525	800	DCLK
HSD Display Area	Thd		480		DCLK
HSD Back Porch	Thbp	36	40	255	DCLK
HSD Front Porch	Thfp	4	5	65	DCLK

9 CAPACITIVE TOUCH SCREEN PANEL SPECIFICATIONS

9.1 Mechanical characteristics

DESCRIPTION	INL SPECIFICATION	REMARK
Touch Panel Size	4.3 inch	
Outline Dimension (OD)	103.1mm x 65.4mm	Cover Lens Outline
Product Thickness	1.1mm ± 0.1mm	
Glass Thickness	0.7mm ± 0.1mm	
Ink View Area	95mm x 56mm	
Sensor Active Area	97.4mm x 56.4mm	
Input Method	5 Finger	
Activation Force	Touch	
Surface Hardness	≥7H	

9.2 Electrical characteristics

DESCRIPTION		SPECIFICATION
Operating Voltage		DC 2.8~3.3V
Power Consumption (IDD)	Active Mode	10~18mA
	Sleep Mode	30~50µA
Interface		I^2C
Linearity		<1.5%
Controller		FT5306
I2C address		0x38 (7 bit address)
Resolution		1280*768

9.3 Interface timing characteristics

PARAMETER	MIN	MAX	UNIT
SCL Frequency	0	400	kHz
Bus Free Time Between a STOP and START Condition	4.7	/	µs
Hold Time (repeated) START Condition	4.0	/	µs
Data Setup Time	250	/	ns
Setup Time for Repeated START Condition	4.7	/	µs
Setup Time for STOP Condition	4.0	/	µs

9.4 I2C Read/Write Interface Description

Figure 7. Write N bytes to I2C slave

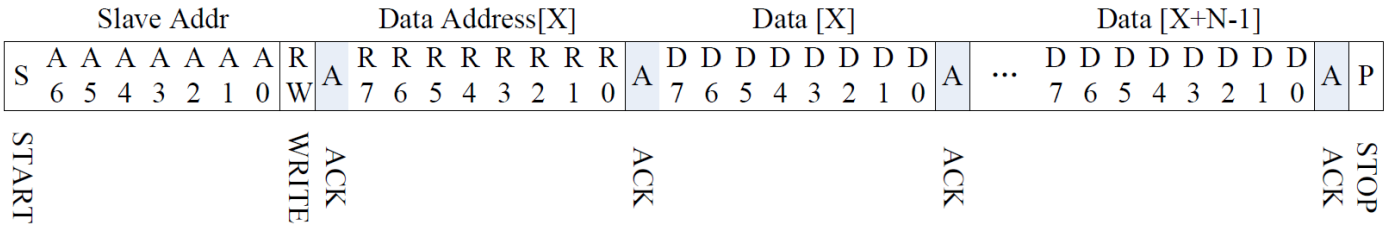

Figure 8. Set Data Address

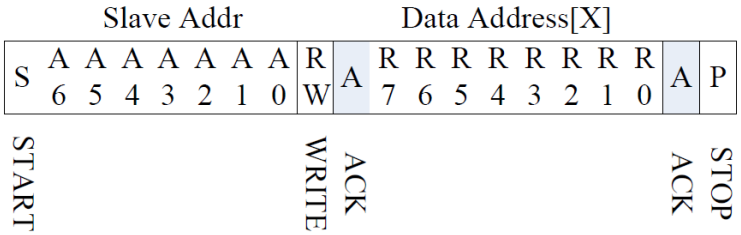

Figure 9. Read X bytes from I2C Slave

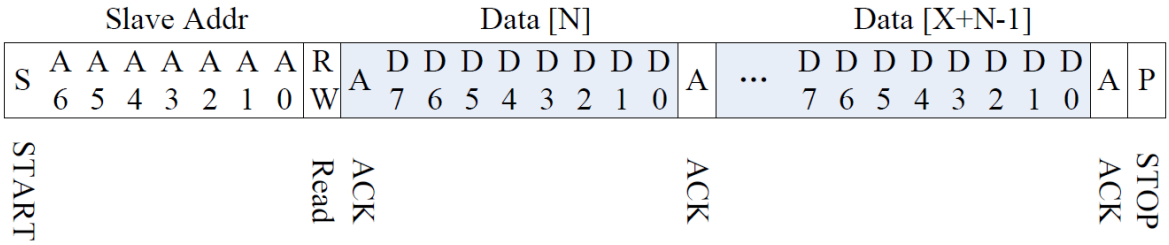

9.5 Communication of the I²C interface with Host

Figure 10. Communication of the I2C interface with Host

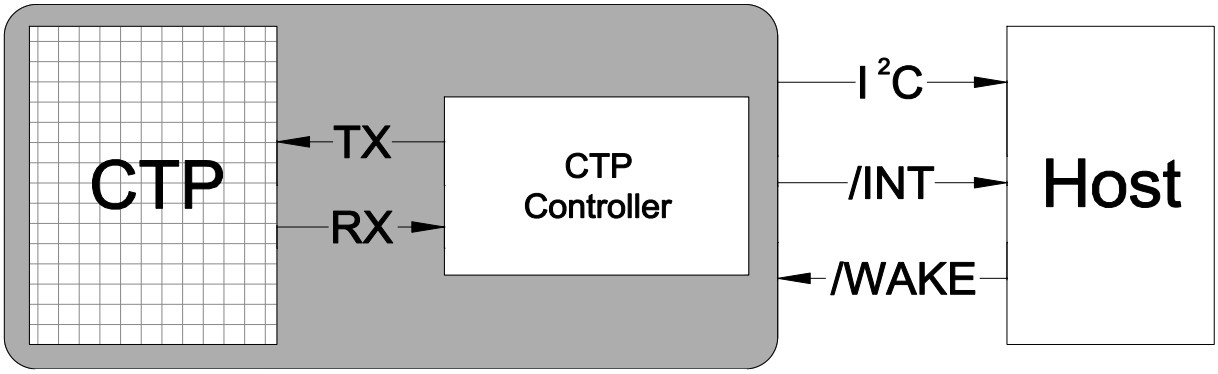

9.6 Touch data read protocol

ADDRESS	NAME	BIT 7	BIT 6	BIT 5	BIT 4	BIT 3	BIT 2	BIT 1	BIT 0	HOST ACCESS
00h	DEVIDE_MODE		Device Mode[2:0]							RW
01h	GEST_ID	Gesture ID[7:0]								R
02h	TD_STATUS					Number of touch points[3:0]				R
03h	TOUCH1_XH	1st Event Flag				1st Touch X Position[11:8]				R
04h	TOUCH1_XL	1st Touch X Position[7:0]								R
05h	TOUCH1_YH	1st Touch ID[3:0]				1st Touch X Position[11:8]				R
06h	TOUCH1_YL	1st Touch Y Position[7:0]								R
07h										R
08h										R
09h	TOUCH2_XH	2nd Event Flag				2nd Touch X Position[11:8]				R
0Ah	TOUCH2_XL	2nd Touch X Position[7:0]								R
0Bh	TOUCH2_YH	2nd Touch ID[3:0]				2nd Touch X Position[11:8]				R
0Ch	TOUCH2_YL	2nd Touch Y Position[7:0]								R
0Dh										R
0Eh										R
0Fh	TOUCH3_XH	3rd Event Flag				3rd Touch X Position[11:8]				R
10h	TOUCH3_XL	3rd Touch X Position[7:0]								R
11h	TOUCH3_YH	3rd Touch ID[3:0]				3rd Touch X Position[11:8]				R
12h	TOUCH3_YL	3rd Touch Y Position[7:0]								R
13h										R
14h										R
15h	TOUCH4_XH	4th Event Flag				4th Touch X Position[11:8]				R
16h	TOUCH4_XL	4th Touch X Position[7:0]								R
17h	TOUCH4_YH	4th Touch ID[3:0]				4th Touch X Position[11:8]				R
18h	TOUCH4_YL	4th Touch Y Position[7:0]								R
19h										R
1Ah										R
1Bh	TOUCH5_XH	5th Event Flag				5th Touch X Position[11:8]				R
1Ch	TOUCH5_XL	5th Touch X Position[7:0]								R
1Dh	TOUCH5_YH	5th Touch ID[3:0]				5th Touch X Position[11:8]				R
1Eh	TOUCH5_YL	5th Touch Y Position[7:0]								R

9.7 Data description.

DEVICE_MODE

This register is the device mode register, configure it to determine the current mode of the chip.

ADRESS	BIT ADRESS	REGISTER NAME	DESCRIPTION
00h	6:4	Device Mode [2:0]	000b Work Mode 100b Factory Mode – Read Raw Data

GEST_ID

This register describes the gesture of a valid touch.

ADRESS	BIT ADRESS	REGISTER NAME	DESCRIPTION
01h	7:0	Gesture ID [7:0]	Gesture ID 0x10 Move Up 0x14 Move Down 0x18 Move Right 0x48 Zoom In 0x49 Zoom Out 0x00 No Gesture

TD_STATUS

This register is the Touch Data status register.

ADRESS	BIT ADRESS	REGISTER NAME	DESCRIPTION
02h	3:0	Number of Touch Points [2:0]	How Many Points Detected 1-5 is Valid
	7:4		

TOUCHn_XH(n:1-10)

This register describes MSB of the X coordinate of the nth touch point and the corresponding event flag.

ADRESS	BIT ADRESS	REGISTER NAME	DESCRIPTION
03h ~ 39h	7:6	Event Flag	00b: Put Down 01b: Put Up 10b: Contact 11b: Reserved
	5:4		Reserved
	3:0	Touch X Position [11:8]	MSB of Touch X Position in Pixels

TOUCHn_XL(n:1-10)

This register describes LSB of the X coordinate of the nth touch point.

ADRESS	BIT ADRESS	REGISTER NAME	DESCRIPTION
04h ~ 3Ah	7:0	Touch X Position [7:0]	LSB of the Touch X Position in Pixels

TOUCHn_YH(n:1-10)

This register describes MSB of the Y coordinate of the nth touch point and corresponding touch ID.

ADRESS	BIT ADRESS	REGISTER NAME	DESCRIPTION
05h ~ 3Bh	7:4	Touch ID[3:0]	Touch ID of Touch Point
	3:0	Touch X Position [11:8]	MSB of Touch Y Position in Pixels

TOUCHn_YL(n:1-10)

This register describes LSB of the Y coordinate of the nth touch point.

ADRESS	BIT ADRESS	REGISTER NAME	DESCRIPTION
05h ~ 3Bh	7:0	Touch X Position [7:0]	LSB of the Touch Y Position in Pixels

9.8 Interrupt Trigger Mode

Figure 11. Interrupt trigger mode timing

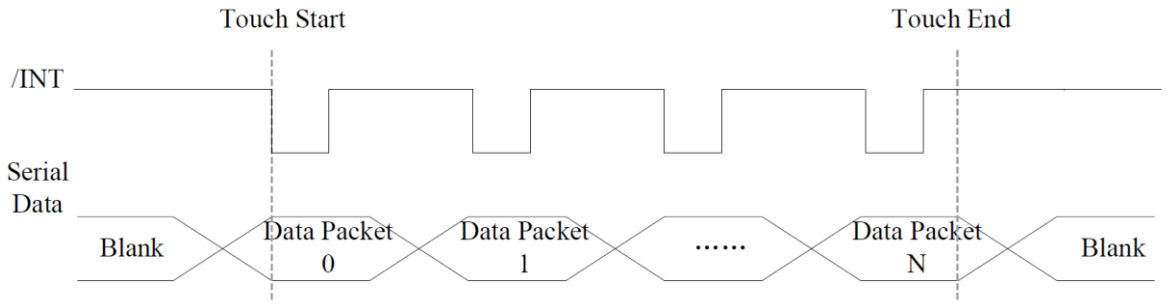

10 INSPECTION

Standard acceptance/rejection criteria for TFT module.

10.1 Inspection condition

Ambient conditions:

- Temperature: 25±°C
- Humidity: (60±10)%RH
- Illumination: Single fluorescent lamp non-directive (300 to 700 lux)

Viewing distance:

35±5cm between inspector bare eye and LCD.

Viewing Angle:

U/D: 45°/45°, L/R 45°/45°

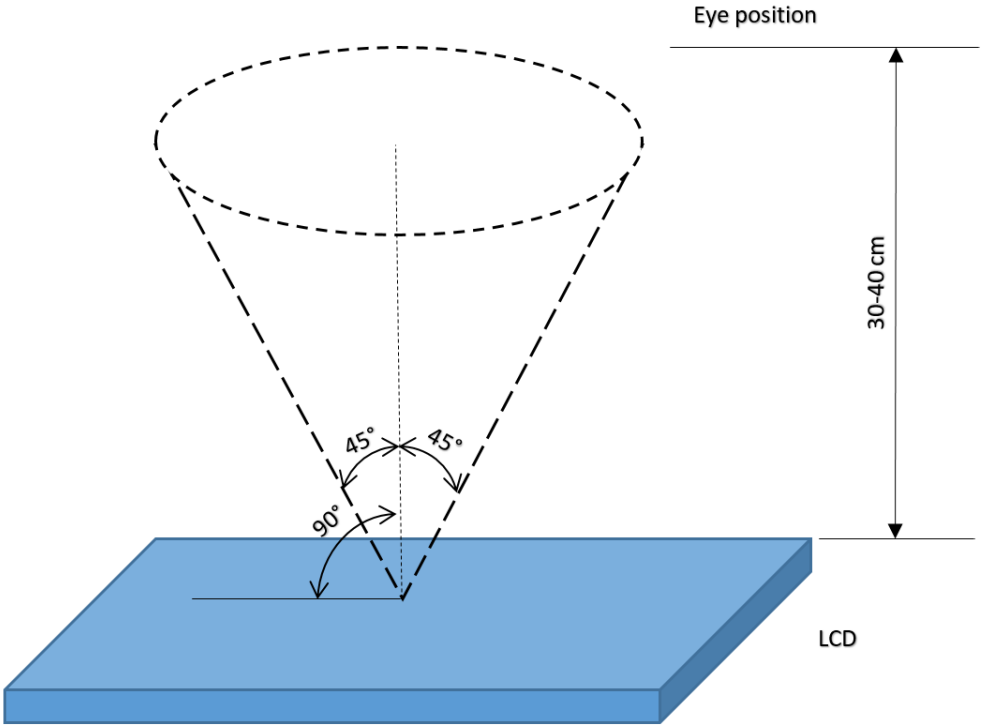

10.2 Inspection standard

<table>
<tr><th>Item</th><th>Criterion</th></tr>
<tr><td>Black spots, white spots, light leakage, Foreign Particle (round Type)</td><td>
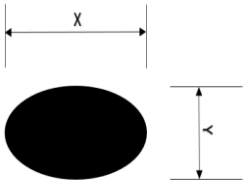

$$D = \frac{(x+y)}{2}$$

*Spots density: 10 mm²

<table>
<tr><th colspan="2">Size < 5”</th></tr>
<tr><td>Average Diameter</td><td>Qualified Qty</td></tr>
<tr><td>D < 0.2 mm</td><td>Ignored</td></tr>
<tr><td>0.2 mm < D < 0.3 mm</td><td>3</td></tr>
<tr><td>0.3 mm < D < 0.5 mm</td><td>2</td></tr>
<tr><td>0.5 mm < D</td><td>0</td></tr>
</table>

<table>
<tr><th colspan="2">Size >= 5”</th></tr>
<tr><td>Average Diameter</td><td>Qualified Qty</td></tr>
<tr><td>D<0.2 mm</td><td>Ignored</td></tr>
<tr><td>0.2 mm < D < 0.3 mm</td><td>4</td></tr>
<tr><td>0.3 mm < D < 0.5 mm</td><td>2</td></tr>
<tr><td>0.5 mm < D</td><td>0</td></tr>
</table>
</td></tr>
<tr><td>LCD black spots, white spots, light leakage (line Type)</td><td>
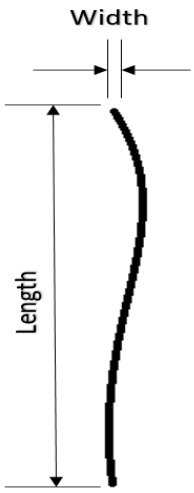

*Spots density: 10 mm²

<table>
<tr><th colspan="3">Size < 5”</th></tr>
<tr><td>Length</td><td>Width</td><td>Qualified Qty</td></tr>
<tr><td>-</td><td>W< 0.02</td><td>Ignored</td></tr>
<tr><td>L < 3.0</td><td>0.02 < W <0.05</td><td rowspan="2">2</td></tr>
<tr><td>L < 2.5</td><td>0.05 < W <0.08</td></tr>
<tr><td>-</td><td>0.08 < W</td><td>0</td></tr>
</table>

<table>
<tr><th colspan="3">Size >= 5”</th></tr>
<tr><td>Length</td><td>Width</td><td>Qualified Qty</td></tr>
<tr><td>-</td><td>W< 0.02</td><td>Ignored</td></tr>
<tr><td>L < 3.0</td><td>0.02 < W <0.05</td><td rowspan="2">4</td></tr>
<tr><td>L < 2.5</td><td>0.05 < W <0.08</td></tr>
<tr><td>-</td><td>0.08 < W</td><td>0</td></tr>
</table>
</td></tr>
</table>

<table>
<tr><th>Item</th><th>Criterion</th></tr>
<tr><td>Clear spots</td><td>
<table>
<tr><th colspan="2">Size < 5”</th></tr>
<tr><td>Average Diameter</td><td>Qualified Qty</td></tr>
<tr><td>D < 0.2 mm</td><td>Ignored</td></tr>
<tr><td>0.2 mm < D < 0.3 mm</td><td>3</td></tr>
<tr><td>0.3 mm < D < 0.5 mm</td><td>2</td></tr>
<tr><td>0.5 mm < D</td><td>0</td></tr>
</table>
<table>
<tr><th colspan="2">Size >= 5”</th></tr>
<tr><td>Average Diameter</td><td>Qualified Qty</td></tr>
<tr><td>D<0.2 mm</td><td>Ignored</td></tr>
<tr><td>0.2 mm < D < 0.3 mm</td><td>4</td></tr>
<tr><td>0.3 mm < D < 0.5 mm</td><td>2</td></tr>
<tr><td>0.5 mm < D</td><td>0</td></tr>
</table>
*Spots density: 10 mm
</td></tr>
<tr><td>Polarizer bubbles</td><td>
<table>
<tr><th colspan="2">Size < 5”</th></tr>
<tr><td>Average Diameter</td><td>Qualified Qty</td></tr>
<tr><td>D < 0.2 mm</td><td>Ignored</td></tr>
<tr><td>0.2 mm < D < 0.5 mm</td><td>3</td></tr>
<tr><td>0.5 mm < D < 1 mm</td><td>2</td></tr>
<tr><td>1 mm < D</td><td>0</td></tr>
<tr><td>Total Q’ty</td><td>3</td></tr>
</table>
<table>
<tr><th colspan="2">Size >= 5”</th></tr>
<tr><td>Average Diameter</td><td>Qualified Qty</td></tr>
<tr><td>D<0.25 mm</td><td>Ignored</td></tr>
<tr><td>0.25 mm < D < 0.5 mm</td><td>3</td></tr>
<tr><td>0.5 mm < D</td><td>0</td></tr>
</table>
</td></tr>
<tr><td>Electrical Dot Defect</td><td>
<table>
<tr><th colspan="2">Size < 5”</th></tr>
<tr><td>item</td><td>Qualified Qty</td></tr>
<tr><td>Black do defect</td><td>4</td></tr>
<tr><td>Bright dot defect</td><td>2</td></tr>
<tr><td>Total Dot</td><td>5</td></tr>
</table>
<table>
<tr><th colspan="2">Size >= 5”</th></tr>
<tr><td>item</td><td>Qualified Qty</td></tr>
<tr><td>Black do defect</td><td>5</td></tr>
<tr><td>Bright dot defect</td><td>2</td></tr>
<tr><td>Total Dot</td><td>5</td></tr>
</table>
</td></tr>
</table>

<table>
<tr><th>Item</th><th>Criterion</th></tr>
<tr><td>Touch panel spot</td><td>
<table>
<tr><th colspan="2">Size < 5”</th></tr>
<tr><td>Average Diameter</td><td>Qualified Qty</td></tr>
<tr><td>D < 0.2 mm</td><td>Ignored</td></tr>
<tr><td>0.2 mm < D < 0.4 mm</td><td>5</td></tr>
<tr><td>0.4 mm < D < 0.5 mm</td><td>2</td></tr>
<tr><td>0.5 mm < D</td><td>0</td></tr>
</table>
<table>
<tr><th colspan="2">Size >= 5”</th></tr>
<tr><td>Average Diameter</td><td>Qualified Qty</td></tr>
<tr><td>D<0.25 mm</td><td>Ignored</td></tr>
<tr><td>0.25 mm < D < 0.5 mm</td><td>4</td></tr>
<tr><td>0.5 mm < D</td><td>0</td></tr>
</table>
</td></tr>
<tr><td>Touch panel White line Scratch</td><td>
<table>
<tr><th colspan="3">Size < 5”</th></tr>
<tr><td>Length</td><td>Width</td><td>Qualified Qty</td></tr>
<tr><td>-</td><td>W< 0.02</td><td>Ignored</td></tr>
<tr><td>L < 3.0</td><td>0.02 < W <0.05</td><td rowspan="2">2</td></tr>
<tr><td>L < 2.5</td><td>0.05 < W <0.08</td></tr>
<tr><td>-</td><td>0.08 < W</td><td>0</td></tr>
</table>
<table>
<tr><th colspan="3">Size >= 5”</th></tr>
<tr><td>Length</td><td>Width</td><td>Qualified Qty</td></tr>
<tr><td>-</td><td>W< 0.03</td><td>Ignored</td></tr>
<tr><td>L < 5.0</td><td>0.03 < W <0.05</td><td>2</td></tr>
<tr><td>-</td><td>0.05 < W</td><td>0</td></tr>
</table>
</td></tr>
</table>

11 RELIABILITY TEST

NO.	TEST ITEM	TEST CONDITION
1	High Temperature Storage	80±2°C/240hours
2	Low Temperature Storage	-30±2°C/240hours
3	High Temperature Operating	70±2°C/240hours
4	Low Temperature Operating	-20±2°C/240hours
5	Temperature Cycle	-30±2°C~25~80±2°C × 20 cycles (30min.) (5min.) (30min.)
6	Damp Proof Test	60°C ±5°C × 90%RH/240hours
7	Vibration Test	Frequency 10Hz~55Hz Amplitude of vibration : 1.5mm Sweep: 10Hz~55Hz~10Hz X, Y, Z 2 hours for each direction.
8	Package Drop Test	Height:60 cm 1 corner,3 edges,6 surfaces
9	ESD Test	Air: ±4KV 150pF/330Ω 5 times Contact: ±2KV 150pF/330Ω 5 time

12 LEGAL INFORMATION

Riverdi makes no warranty, either expressed or implied with respect to any product, and specifically disclaims all other warranties, including, without limitation, warranties for merchantability, non-infringement and fitness for any particular purpose. Information about device are the property of Riverdi and may be the subject of patents pending or granted. It is not allowed to copy or disclosed this document without prior written permission.

Riverdi endeavors to ensure that the all contained information in this document are correct but does not accept liability for any error or omission. Riverdi products are in developing process and published information may be not up to date. Riverdi reserves the right to update and makes changes to Specifications or written material without prior notice at any time. It is important to check the current position with Riverdi.

Images and graphics used in this document are only for illustrative the purpose. All images and graphics are possible to be displayed on the range products of Riverdi, however the quality may vary. Riverdi is no liable to the buyer or to any third part for any indirect, incidental, special, consequential, punitive or exemplary damages (including without limitation lost profits, lost savings, or loss of business opportunity) relating to any product, service provided or to be provided by Riverdi, or the use or inability to use the same, even if Riverdi has been advised of the possibility of such damages.

Riverdi products are not fault tolerant nor designed, manufactured or intended for use or resale as on line control equipment in hazardous environments requiring fail – safe performance, such as in the operation of nuclear facilities, aircraft navigation or communication systems, air traffic control, direct life support machines or weapons systems in which the failure of the product could lead directly to death, personal injury or severe physical or environmental damage (‘High Risk Activities’). Riverdi and its suppliers specifically disclaim any expressed or implied warranty of fitness for High Risk Activities. Using Riverdi products and devices in 'High Risk Activities' and in any other application is entirely at the buyer’s risk, and the buyer agrees to defend, indemnify and hold harmless Riverdi from any and all damages, claims or expenses resulting from such use. No licenses are conveyed, implicitly or otherwise, under any Riverdi intellectual property rights.

Riverdi
our pixels behave