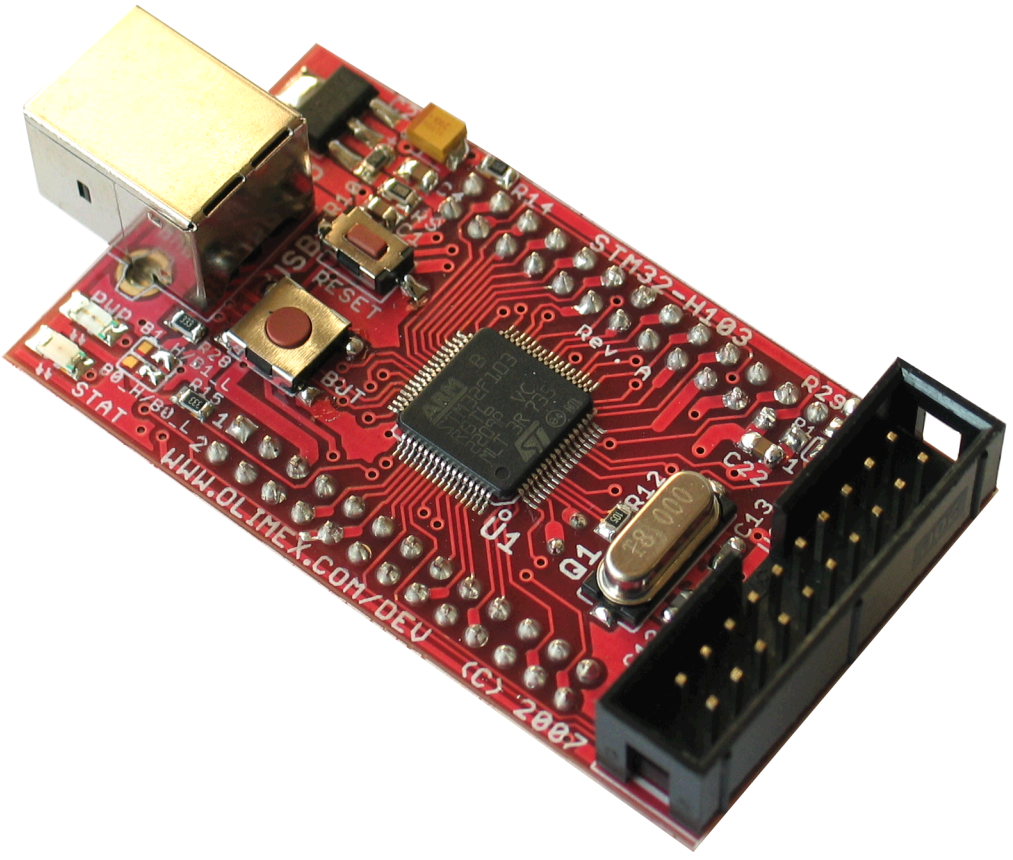

STM-H103 development board

user's manual

Rev. B, March 2014

Copyright(c) 2014, OLIMEX Ltd, All rights reserved

sales@prom-elec.com / ООО ПРОМЭЛЕКТРОНИКА

INTRODUCTION:

STM32-H103 board is an entry level development board for the new ARM Cortex M3 family of devices produced by ST Microelectronics Inc.
With STM32-H103 you can explore the features of STM32 family on budged, the board have everything necessary to build simple applications: USB port where power is taken and power supply circuit, reset and oscillator circuits, JTAG port for programming and debugging, two status LEDs and user button.
Although a very simple board, it is sufficient to easily build USB application like PC mouse, USB mass storage device, USB Audio class device, USB to Virtual RS232 port. There are plenty of GPIOs on extension headers where you can connect your additional circuits.

BOARD FEATURES:

- CPU: STM32F103RBT6 ARM 32 bit CORTEX M3™
- JTAG connector with ARM 2x10 pin layout for programming/debugging with ARM-JTAG, ARM-USB-OCD, ARM-USB-TINY
- USB connector
- user button
- RESET button
- status LED
- power supply LED
- on board voltage regulator 3.3V with up to 800mA current
- single power supply: takes power from USB port or extension connector pin
- 8 Mhz crystal oscillator
- 32768 Hz crystal and RTC backup battery connector
- extension headers for all uC ports
- PCB: FR-4, 1.5 mm (0,062"), soldermask, silkscreen component print
- Dimensions: 61x 34mm (2.4 x 1.3")
- Distance between the extension connectors: 25.4 mm (1")

ELECTROSTATIC WARNING:

The STM32-H103 board is shipped in protective anti-static packaging. The board must not be subject to high electrostatic potentials. General practice for working with static sensitive devices should be applied when working with this board.

BOARD USE REQUIREMENTS:

Cables: 1.8 meter USB A-B cable to connect to USB host.
Hardware: ARM-JTAG, ARM-USB-OCD, ARM-USB-TINY or other ARM JTAG compatible tool
Software: ARM C compiler and debugger software, the possible options are:
- free open source platform: GNU C compiler + OpenOCD and Eclipse (support all low cost Olimex JTAG debuggers)
- commercial solution EW-ARM from IAR Systems AB, require expensive J-LINK debugger
- CrossWorks from Rowley (supports all Olimex low cost JTAG debuggers).

BOARD LAYOUT:

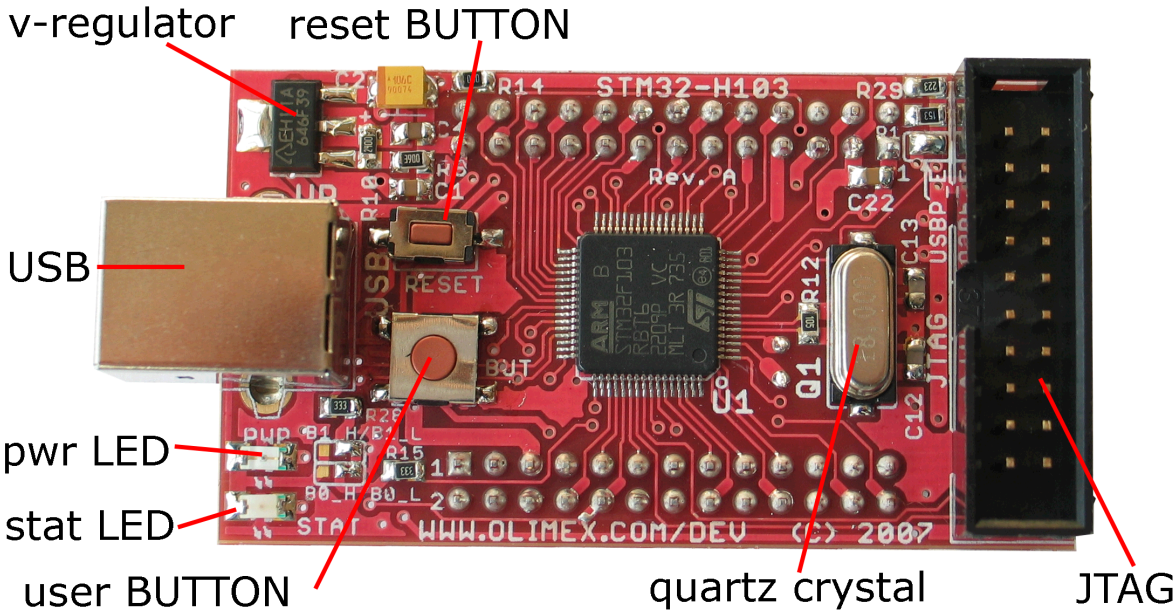

extension header 2

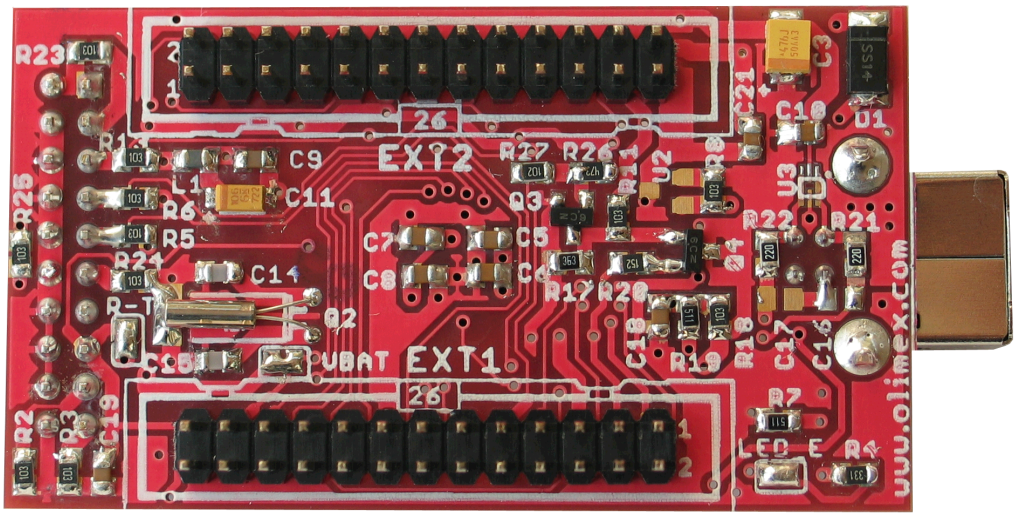

extension header 1

SCHEMATIC: Please note that the schematic suits two boards STM32-H103 and SMT32-H405. There is a slight variation mentioned over the microcontroller.

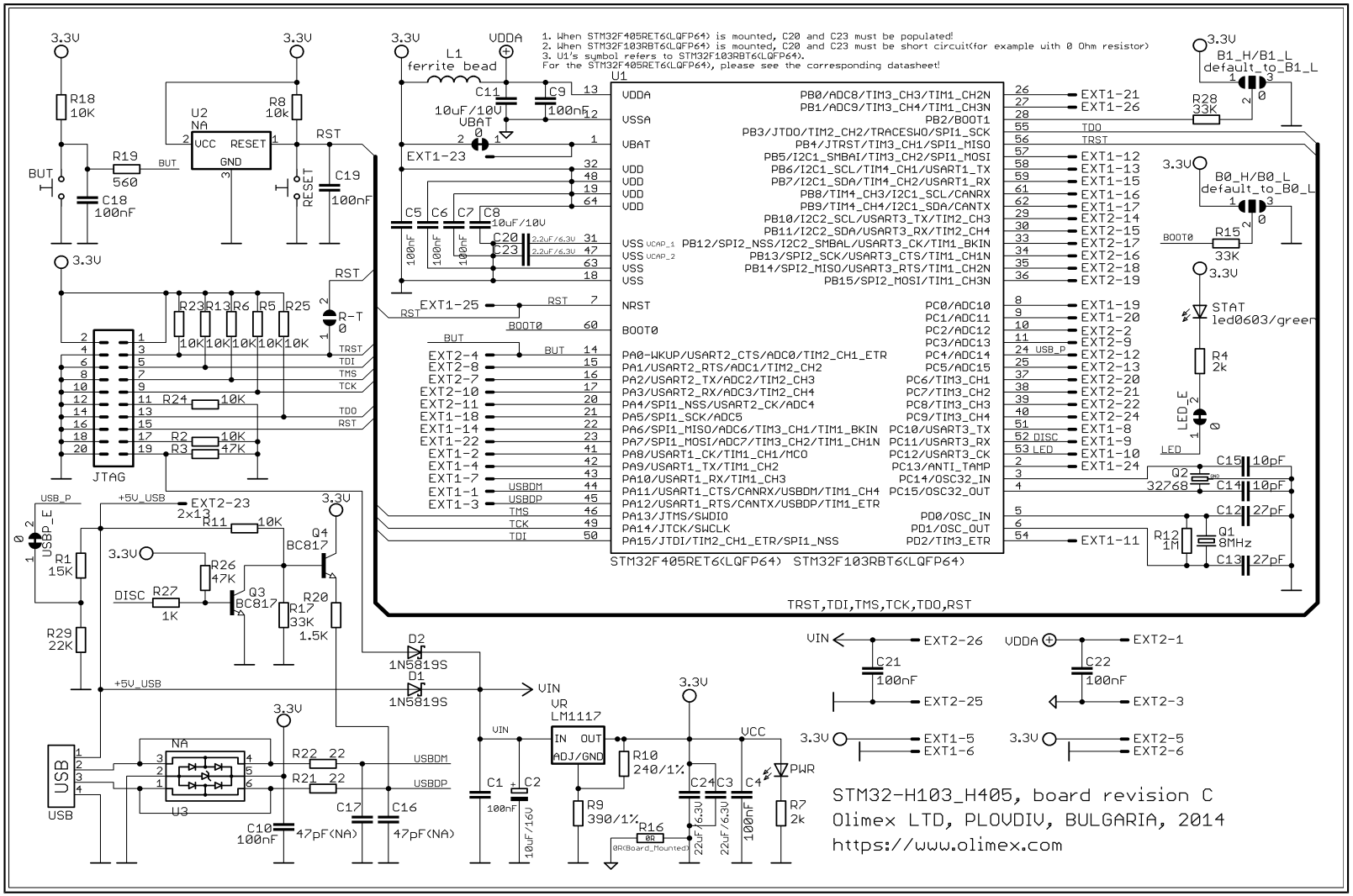

PROCESSOR FEATURES:

STM-H103 board use ARM 32-bit Cortex™-M3 CPU **STM32F103RBT6** from ST Microelectronics with these features:

- CPU clock up to 72Mhz
- FLASH 128KB
- RAM 20KB
- DMA x7 channels
- RTC
- WDT
- Timers x3+1
- SPI x2
- I2C x2
- USART x3
- USB x1
- CAN x1 (multiplexed with USB so both can't be used in same time)
- GPIO up to 51 (multiplexed with peripherials)
- 2 ADC 12-bit
- operating voltage 2.0-3.6V
- temperature -40C +85C

Figure 1. STM32F103xx performance line block diagram

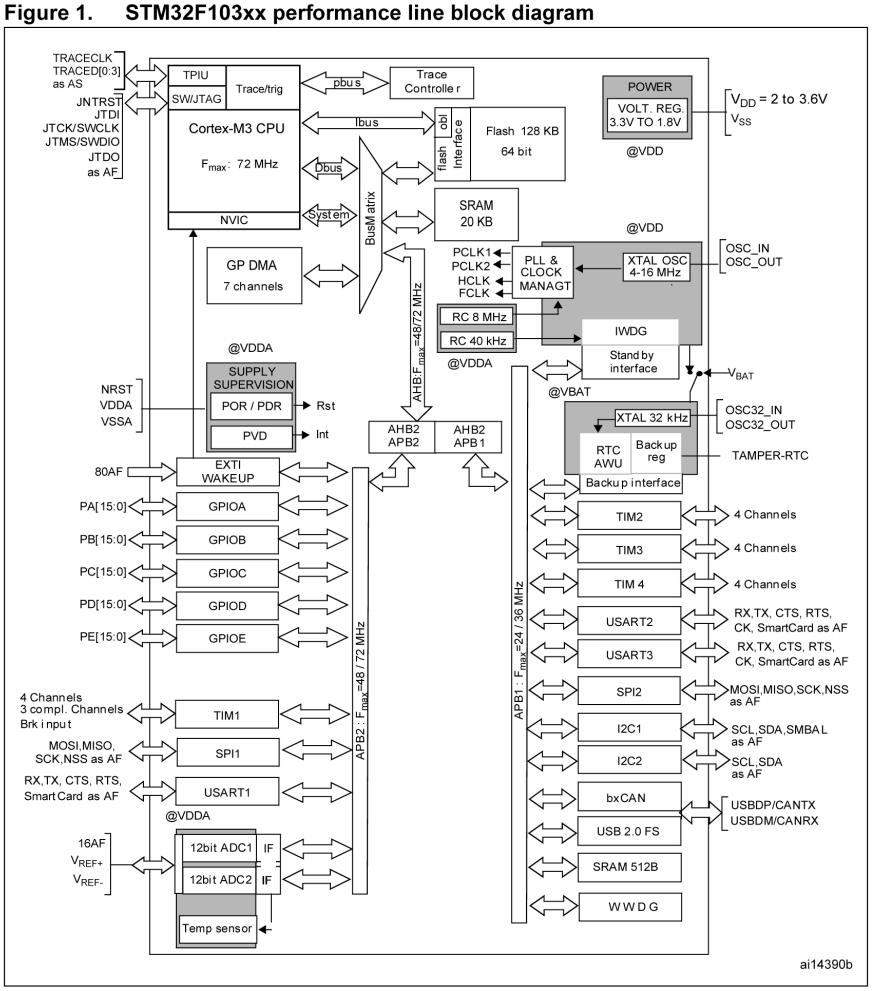

1. T_A = –40 °C to +105 °C (junction temperature up to 125 °C).
2. AF = alternate function on I/O port pin.

MEMORY MAP:

Memory mapping

The memory map is shown in *Figure 7*.

Figure 7. Memory map

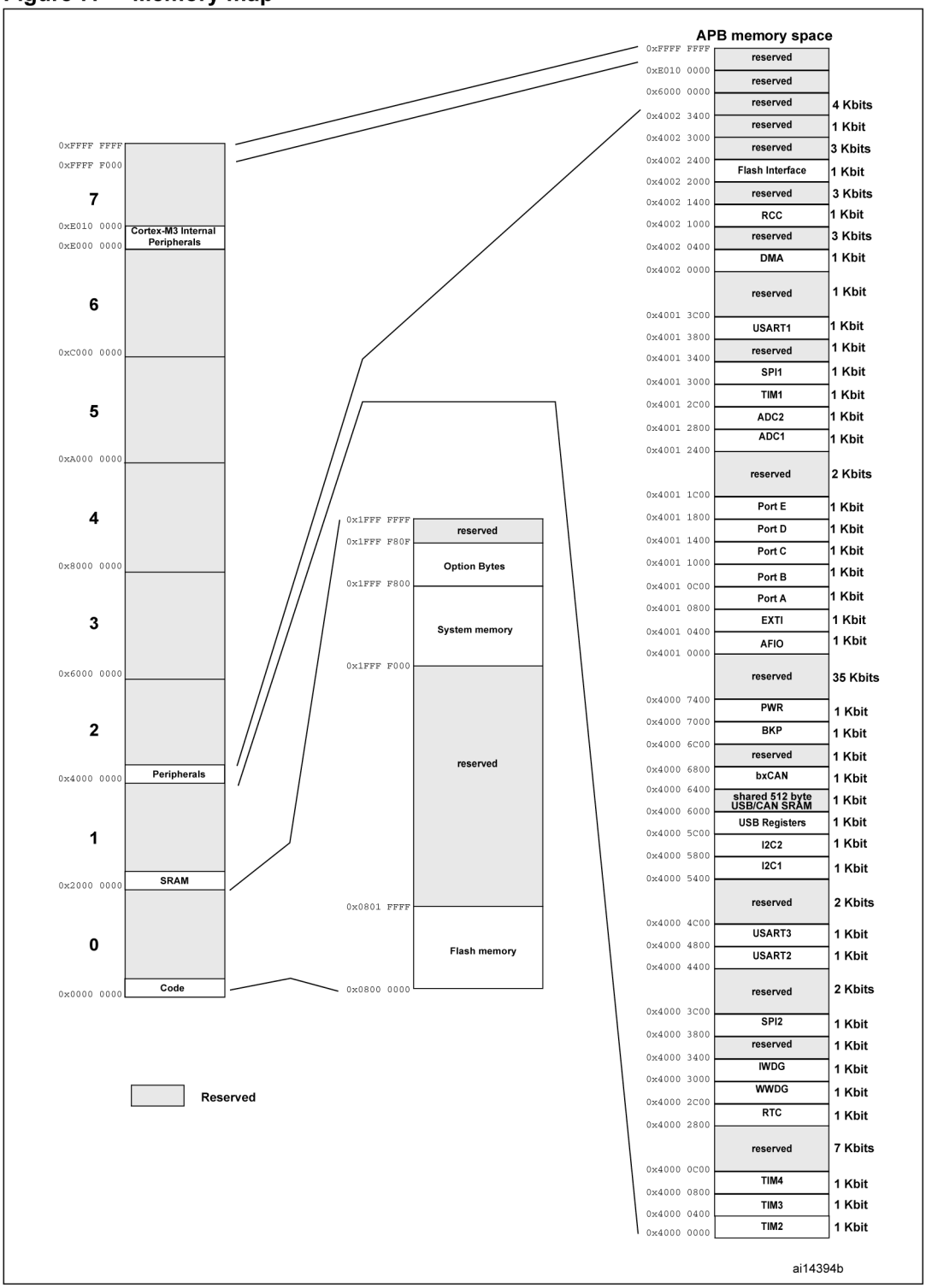

POWER SUPPLY CIRCUIT:

STM32-H103 can take power from two sources:
- USB connector where 5V power supply is applied by USB host
- Vin input in extension pin EXT2.26 where +5-9V may be applied

The board power consumption is: about 40 mA with all peripherials and MCU running at full speed, there are different power saving modes which may put STM32F103RBT6 in power sleep mode and in these modes the consumption of the MCU is only few micro ampers.

RESET CIRCUIT:

STM32-H103 reset circuit is made with RC group R8 - 10K and C19 - 100nF.
Although on the schematic is made provision for external reset IC such is not necessary as STM32 have build-in brown out detector. Manual reset is possible by the RESET button.

CLOCK CIRCUIT:

Quartz crystal 8Mhz is connected to STM32F103RBT6. Internal PLL circuit can multiply this frequency up to 72Mhz.

32.768 KHz quartz crystal is connected to STM32F103RBT6 for it's internal Real Time Clock.

EXTERNAL CONNECTOR DESCRIPTION:

EXTENSION 1

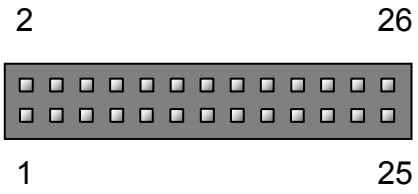

Pin #	Signal Name	Pin #	Signal Name
1	PA11/USBDM/CANRX	2	PA8
3	PA12/USBDP/CANTX	4	PA9/UART1.TX
5	+3.3V out	6	GND
7	PA10/UART1.RX	8	PC10
9	PC11/USBpull	10	PC12/LED
11	PD2	12	PB5/I2C1.SMBA
13	PB6/I2C.SCL	14	PA6/SPI1.MISO
15	PB7/I2C.SDA	16	PB8
17	PB9	18	PA5/SPI1.SCK
19	PC0	20	PC1
21	PB0	22	PA7/SPI1.MOSI
23	VBAT	24	PC13
25	RST	26	PB1

EXTENSION 2

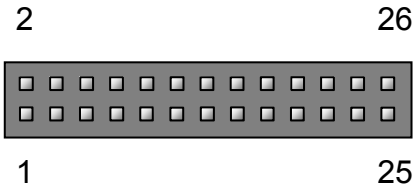

Pin #	Signal Name	Pin #	Signal Name
1	VDDA	2	PC2
3	GNDA	4	PA0/BUT
5	3.3V	6	GND
7	PA2/UART2.TX	8	PA1
9	PC3	10	PA3/UART2.RX
11	PA4/SPI1.NSS	12	PC4/USB-P
13	PC5	14	PB10/UART3.TX
15	P11/UART3.RX	16	PB13/SPI2.SCK
17	PB12/SPI2.NSS/I2C.SMBA	18	PB14/SPI2.MISO
19	PB15/SPI2.MOSI	20	PC6
21	PC7	22	PC8
23	+5V USB	24	PC9
25	GND	26	VIN

JUMPER DESCRIPTION:

R-T connects JTAG TRST signal to STM32F103RBT6 RESET
Default state closed (shorted)

VBAT connects 3.3V to STM32F103RBT6 Vbat pin.1
Default state closed (shorten), Vbat signal is also available to EXT1-23, so if you want to connect external backup battery to the STM32F103RBT6 this jumper should be opened (unshorted) and the external battery to be connected to EXT1-23 pin.

USBP-E connects USB power supply to STM32F103RBT6 pin.24 PC4/ADC14 and allow to detect if the board is connected to USB host.
Default state closed (shorten)

LED-E connects STATUS LED to STM32F103RBT6 pin.53 PC12
Default state closed (shorten)

BOOT0, BOOT1 boot sequence select
B1_H/B1_L (Boot1_High/Boot1_Low)
B0_H/B0_L (Boot0_High/Boot0_Low)

Default position:

Boot1 is log. 0

Boot0 is log. 0

Boot mode selection pins		Boot mode	Aliasing
BOOT1	BOOT0		
x	0	User Flash memory	User Flash memory is selected as boot space
0	1	SystemMemory	SystemMemory is selected as boot space
1	1	Embedded SRAM	Embedded SRAM is selected as boot space

INPUT/OUTPUT:

User button with name **BUT** – connected to STM32F103RBT6 pin.14 PA0.WKUP;

Status green LED with name **STAT** connected to STM32F103RBT6 pin.53 PC12, note that LED-E SMT jumper should be shorted to may LED work properly (it's shorted by default), if you decide to use PC12 port for other purpose you have to remove the solder short on this jumper which will disconnect the LED from PC12 port;

Power supply red LED with name **PWR** – indicates that 3.3V power supply is applied;

JTAG:

The JTAG connector allows the software debugger to talk via a JTAG (Joint Test Action Group) port directly to the core. Instructions may be inserted and executed by the core thus allowing STM32F103RBT6 memory to be programmed with code and executed step by step by the host software.
For more details refer to IEEE Standard 1149.1 - 1990 Standard Test Access Port and Boundary Scan Architecture and STM32F103RBT6 datasheets and users manual.

JTAG CONNECTOR PIN DESCRIPTIONS

Pin #	Signal Name	Pin #	Signal Name
1	TVCC 3.3V	2	TVCC 3.3V
3	TRST	4	GND
5	TDI	6	GND
7	TMS	8	GND
9	TCK	10	GND
11	NC	12	GND
13	TDO	14	GND
15	RST	16	GND
17	NC	18	GND
19	NC	20	GND

TMS	Input	**Test Mode Select.** The TMS pin selects the next state in the TAP state machine.
TCK	Input	**Test Clock.** This allows shifting of the data in, on the TMS and TDI pins. It is a positive edgetriggered clock with the TMS and TCK signals that define the internal state of the device.
TDI	Input	**Test Data In.** This is the serial data input for the shift register.
TDO	Output	**Test Data Output.** This is the serial data output from the shift register. Data is shifted out of the device on the negative edge of the TCK signal.
TRST	Input	**Test Reset.** The TRST pin can be used to reset the test logic within the EmbeddedICE logic.

RS232:

STM32F103RBT6 have 3 USARTs which are available on the extension headers. One of them can operate up to 4.5 Mbit/s, the other two up to 2.25 Mbit/s. They provide hardware management of the CTS and RTS signals, IrDA SIR ENDEC support, are ISO 7816 compliant and have LIN Master/Slave capability.

All USART interfaces can be served by the DMA controller.

USART1.Tx – pin.42 PA9 EXT1-4
USART1.Rx – pin.43 PA10 EXT1-7

USART2.Tx – pin.16 PA2 EXT2-7
USART2.Rx – pin.17 PA3 EXT2-10

USART3.Tx – pin.29 PB10 EXT2-14
USART3.Rx – pin.30 PB11 EXT2-15

SPI:

STM32F103RBT6 have 2 SPIs which able to communicate up to 18 Mbits/s in slave and master modes in fullduplex and simplex communication modes. The 3-bit prescaler gives 8 master mode frequencies and the frame is configurable from 8-bit to 16-bit. The hardware CRC generation/verification supports basic SD Card/MMC modes.

Both SPIs can be served by the DMA controller.

SPI1.NSS – pin.20 PA4 EXT2-11
SPI1.SCK – pin.21 PA5 EXT1-18
SPI1.MISO – pin.22 PA6 EXT1-14
SPI1.MOSI – pin.23 PA7 EXT1-22

SPI2.NSS – pin. PB12
SPI2.SCK – pin. PB13
SPI2.MISO – pin. PB14
SPI2.MOSI – pin. PB15

I2C:

STM32F103RBT6 have two I²C bus interfaces which can operate in multi-master and slave modes. They can support
standard and fast modes. They support dual slave addressing (7-bit only) and both 7/10-bit addressing in master
mode. A hardware CRC generation/verification is embedded.

They can be served by DMA and they support SM Bus 2.0/PM Bus.

I2C1.SDA – pin.59 PB7 EXT1-15
I2C1.SCL – pin.58 PB6 EXT1-13
I2C1.SMBA – pin.57 PB5 EXT1-12

I2C2.SDA – pin.30 PB11 EXT2-15
I2C2.SCL – pin. 29 PB10 EXT2-14
I2C2.SMBA – pin.33 PB12 EXT2-17

CAN:

The STM32F103RBT6 CAN is compliant with specifications 2.0A and B (active) with a bit rate up to 1 Mbit/s. It can receive and transmit standard frames with 11-bit identifiers as well as extended frames with 29-bit identifiers. It has three transmit mailboxes, two receive FIFOs with 3 stages and 14 scalable filter banks.

The CAN and USB share same pins PA11/EXT1-1 and PA12/EXT1-3, so you can't use both CAN and USB on same time.

USB:

The STM32F103RBT6 embeds a USB device peripheral compatible with the USB Full-speed 12 Mbs. The USB interface implements a full speed (12 Mbit/s) function interface. It has software configurable endpoint setting and suspend/resume support. The dedicated 48 MHz clock source is generated from the internal main PLL.

The CAN and USB share same pins PA11/EXT1-1 and PA12/EXT1-3, so you can't use both CAN and USB on same time.

ADC:

STM32F103RBT6 have two 12-bit Analog to Digital Converters which share up to 16 external channels, performing conversions in singleshot or scan modes. In scan mode, automatic conversion is performed on a selected group of analog inputs.
Additional logic functions embedded in the ADC interface allow:
- Simultaneous sample and hold
- Interleaved sample and hold
- Single shunt

The ADC can be served by the DMA controller.
An analog watchdog feature allows very precise monitoring of the converted voltage of one, some or all selected channels. An interrupt is generated when the converted voltage is outside the programmed thresholds. The events generated by the standard timers (TIMx) and the Advanced Control timer (TIM1) can be internally connected to the ADC start trigger, injection trigger, and DMA trigger respectively, to allow the application to synchronize A/D conversion and timers.

MECHANICAL DIMENSIONS:

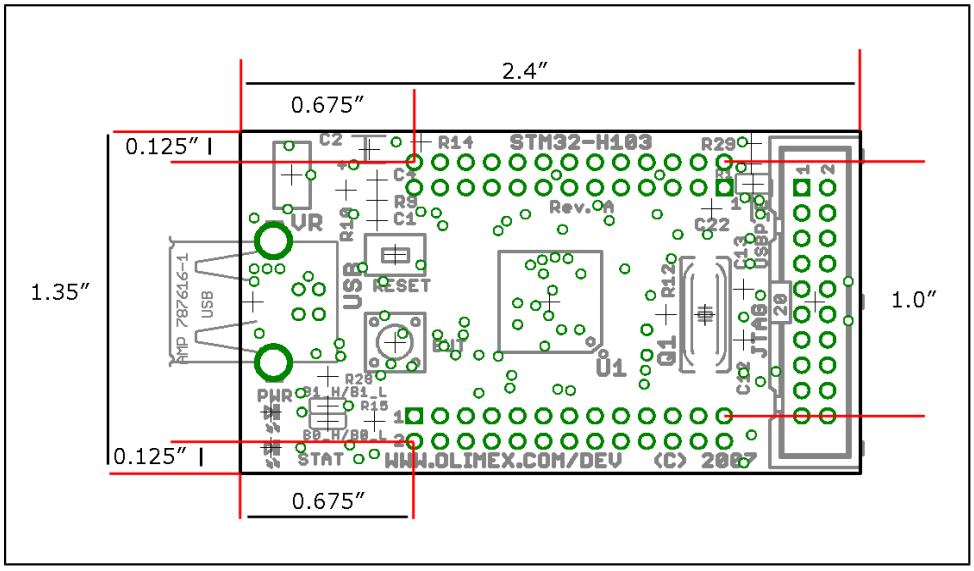

AVAILABLE DEMO SOFTWARE:

DEMO1. Blinking LED for EW-ARM 5.11

Blinks the on-board LED.

DEMO2. USB mouse for EW-ARM 5.11

Creates USB mouse and when board is connected to PC it starts moving the mouse cursor in circle.

DEMO3. Blinking LED for GCC+OpenOCD+Eclipse

Blinks the on-board LED.

ORDER CODE:

STM32-H103 – assembled and tested (no kit, no soldering required)

How to order?
You can order to us directly or by any of our distributors.
Please visit our web site www.olimex.com for more info.

Pb-free, Green All boards manufactured by Olimex LTD are ROHS compliant

Document revision history:

REV.A - created February 2008

REV.B - updated March 2014

Remember to check the schematics and the board design files to compare the differences.

Document revision history:

board rev. A

1. Replaced boot jumpers from 2-pin package to 3-pin package
2. Connected VUSB to PC4(ADC14) through ladder
3. Change BH to reiki

board rev. B

1. R3 now changed from 10K to 47K
2. Added D2 so the board cab be powered from JTAG pin #19
3. C8 gets changed from 100nF to 4.7uF/6.3V according to the datasheet

board rev. C

1. Added C20 and C23 capacitors on processor pins 31 and 47 which change whether you have STM32-H103 or STM32-H405 board
 If there STM32F103RBT6(LQFP64) c20 and c23 would be 0 Ohm resistors
 If there STM32F103RBT6(LQFP64) c20 and c23 would 2.2uF/6.3V be resistors
2. C11 ot 10uF/6.3V is now 10uF/10V
3. C8 ot 4.7uF/6.3V is now 10uF/10V
4. C3 ot 47uF/6.3 becomes 22uF/6.3V parallel to it we add C24 22uF/6.3V
5. All resistors, capacitors and the LED diodes are now in 0603 package
6. The VBAT, USBP_E, LED_E are now closed by default
7. R16 bow becomes 0R(Board_Mounted)

Disclaimer:

© 2014 Olimex Ltd. All rights reserved. Olimex®, logo and combinations thereof, are registered trademarks of Olimex Ltd. Other terms and product names may be trademarks of others.

The information in this document is provided in connection with Olimex products. No license, express or implied or otherwise, to any intellectual property right is granted by this document or in connection with the sale of Olimex products.

Neither the whole nor any part of the information contained in or the product described in this document may be adapted or reproduced in any material from except with the prior written permission of the copyright holder.

The product described in this document is subject to continuous development and improvements. All particulars of the product and its use contained in this document are given by OLIMEX in good faith. However all warranties implied or expressed including but not limited to implied warranties of merchantability or fitness for purpose are excluded.

This document is intended only to assist the reader in the use of the product. OLIMEX Ltd. shall not be liable for any loss or damage arising from the use of any information in this document or any error or omission in such information or any incorrect use of the product.