OptoSupply
Light It Up

5mm Round Premium Orange LED

OSO5PA5111A

■Features

- High Luminous LEDs
- 5mm Round Standard Directivity
- Superior Weather-resistance
- UV Resistant Epoxy
- Water Clear Type

■Applications

- Traffic Signal
- Backlighting
- Signal and channel letter
- Other Lighting

■Outline Dimension

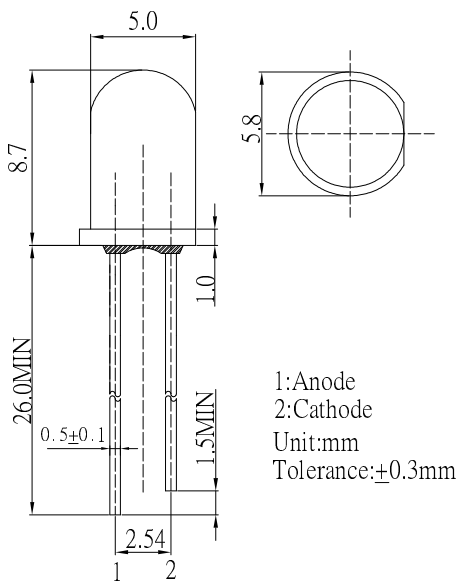

■Absolute Maximum Rating (Ta=25℃)

Item	Symbol	Value	Unit
DC Forward Current	I_F	50	mA
Pulse Forward Current*	I_{FP}	120	mA
Reverse Voltage	V_R	5	V
Power Dissipation	P_D	130	mW
Operating Temperature	Topr	-30 ~ +85	℃
Storage Temperature	Tstg	-40 ~ +100	℃
Lead Soldering Temperature	Tsol	260℃/ 5sec	-

*Pulse width Max.10ms Duty ratio max 1/10

■Directivity

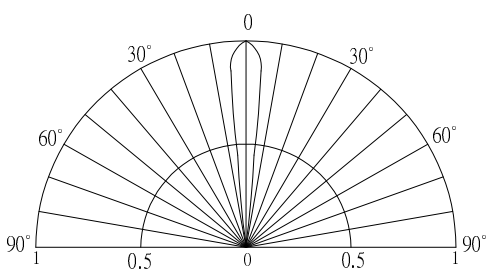

■Electrical -Optical Characteristics (Ta=25℃)

Item	Symbol	Condition	Min.	Typ.	Max.	Unit
DC Forward Voltage	V_F	I_F=20mA	1.8	2.1	2.6	V
DC Reverse Current	I_R	V_R=5V	-	-	10	μA
Domi. Wavelength*	λ_D	I_F=20mA	600	605	610	nm
Luminous Intensity*	Iv	I_F=20mA	25000	30000	-	mcd
50% Power Angle	$2\theta_{1/2}$	I_F=20mA	-	15	-	deg

*1 Tolerance of dominant wavelength is ±1nm
*2 Tolerance of luminous intensity is ±15%
*3 Quality level at 50ppm.
*4 For the FT (Final Test) conditions and test procedures is AQL 0.65 standards.

■Maximum Forward Current

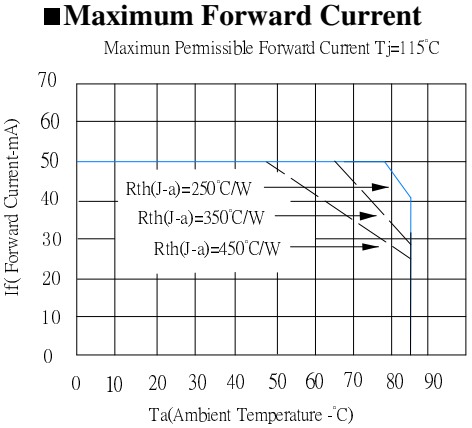

TÜV CERT ISO 9001 : 2000
RWTÜV Certified Company
www.optosupply.com RoHS Compliant EU 2002/95/EC
REACH The new EU chemicals legislation
ATTENTION OBSERVE PRECAUTIONS ELECTROSTATIC SENSITIVE DEVICES
sales@prom-elec.com / ООО ПРОМЭЛЕКТРОНИКА