Current-Compensated Chokes - Nanocrystalline Core

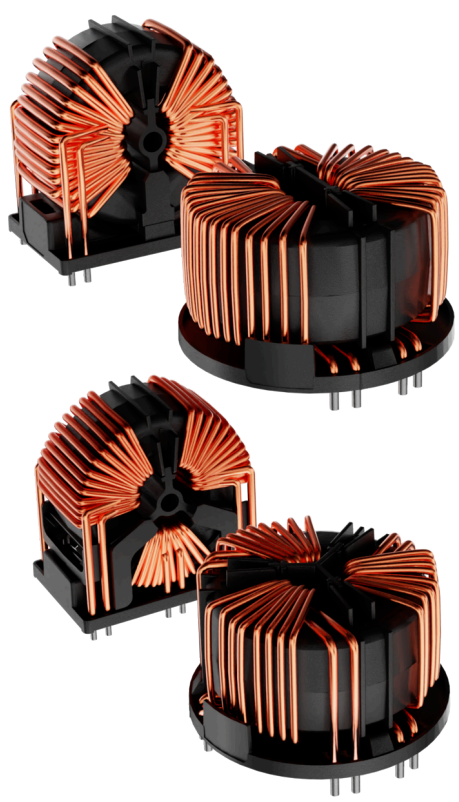

- Rated currents from 25 to 63 A
- Up to 600 VAC and VDC
- 2- and 3-wire configurations
- Horizontal and vertical PCB mounting types
- Ruggedized saturation and thermal behavior
- Open construction for forced and convection cooling
- Straightforward pin-out for easy PCB design
- Nanocrystalline core for high performance at 10 kHz

Performance indicators

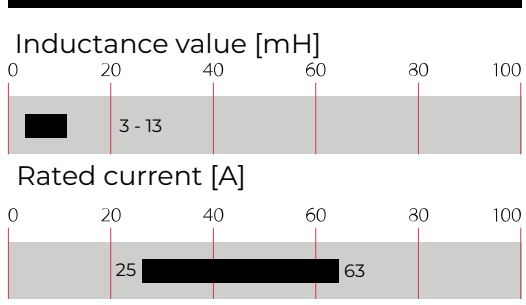

Approvals & Compliances

RoHS

RT common-mode chokes are mainly used to filter EMI noise on AC power lines up to 600 VAC. EMI noise of electronic equipment can go to the power lines and disturb the proper function of other devices like communication devices or control logic of robotics. Thus noise generated by the equipment from switched power electronics or by high slew rates of controllers needs to be filtered. RT common-mode chokes are used to suppress EMI noise in PCB integrated filter designs with line bypass capacitors or in combination with single phase filters for extra low leakage filter designs.

Features and Benefits

- Cost-effective PCB designs for up to 100 A with forced cooling
- EIS (electrical insulation system E332676) acc. to UL 1446
- Compact size and light weight
- Low magnetic leakage flux
- Excellent winding insulation
- Standardized foot print
- Broad range of inductance ratings
- Custom-specific versions on request

Technical Specifications

Rated currents	25 to 63 A @ 60°C
Operating frequency	DC to 400 Hz
Creepage and clearance distances	Creepage & Clearance (2-line): ≥ 3.5 mm (Coil - Coil) / ≥ 3.0 mm (Coil-Core) Creepage & Clearance (3-line): ≥ 6.3 mm (Coil - Coil) / ≥ 5.5 mm (Coil-Core)
High potential test voltage	3 kV AC 3s (coil to coil) Repetition with max. 80% of the HV test voltage
Rated inductance	3 to 13 mH
Operating voltage	300 VAC / 450 VDC (2-line) 600 VAC (3-line)
Overvoltage category	III (acc. IEC 60664-1)
Pollution degree	PD2 (acc. IEC60664-1)
Stray inductance	Max. 0.1% of rated inductance (@ 10 kHz 1 V, 0 A)
Temperature range (operation and storage)	-40°C to +125°C
Climatic category	40/125/56 (acc. IEC 60068-1)
Altitude	2'000 m, current and voltage derating above
Flammability corresponding to	UL 94 V0
Vibration and shock	Vibration: 10 Hz to 55 Hz (24 cycles, according IEC 60938-1) Shock: 30 g / 18 ms (3 cycles, according IEC 60938-1) 3M4 (according IEC 60721-3-3)
Design corresponding to	UL/IEC 60938-1/-2 UL1446
MTBF (Mil-HB-217F)	>2,000,000 h @ 60°C/300 V

Typical Applications

- AC and DC filtering for midsize power range drives, photovoltaic inverters, fast chargers, EV charging stations, UPS and switch mode power supplies
- Filter with low leakage current noise or improved immunity against grid disturbances
- Electronic devices, automation and (industrial) LED lighting
- Communication devices
- Medical and laboratory equipment
- Converters

Typical electrical schematic

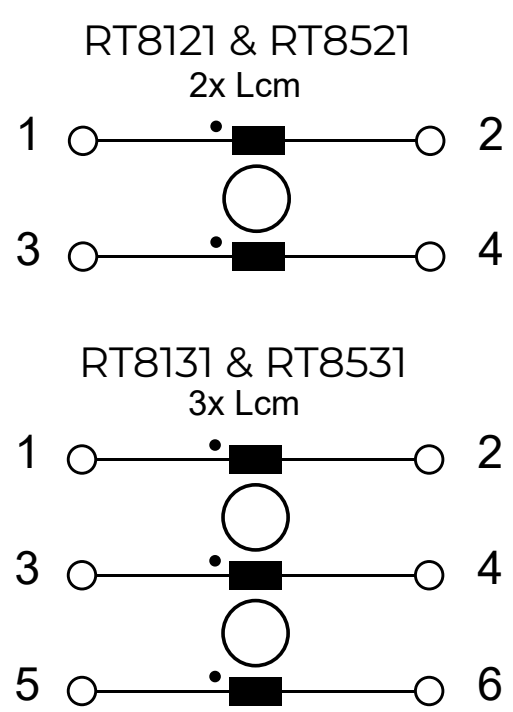

RT Series - Nanocrystalline Core

	Cooling nominal Current @ 60˚C [A]	*3 m/s nominal Current @ 60˚C [A]	**Ln @ 25˚C 10kHz [mH/path]	Ln @ 25˚C 100kHz [mH/path]	R @ 25˚C [mΩ/path]	Size [size]	***Ø Pin ±0.1 ØP [mm]	Weight [g]
Horizontal 2-line								
RT8121-32-12M8	32	51	12.8	2.9	3.4	13	2.4	220
RT8121-40-10M1	40	64	10.1	2.3	2.2	13	2.8	230
RT8121-50-8M6	50	80	8.6	1.9	1.7	14	2x 2.2	280
RT8121-63-4M4	63	100	4.4	1	1.1	14	2x 2.2	270
Vertical 2-line								
RT8521-32-12M8	32	51	12.8	2.9	3.5	15	2.4	230
RT8521-40-10M1	40	64	10.1	2.3	2.3	15	2.8	240
RT8521-50-8M6	50	80	8.6	1.9	1.7	16	2x 2.2	300
RT8521-63-4M4	63	100	4.4	1	1	16	2x 2.2	290
Horizontal 3-line								
RT8131-25-12M8	25	25	12.8	2.9	3.5	17	2.4	260
RT8131-32-10M1	32	51	10.1	2.3	2.5	17	2.4	260
RT8131-40-6M3	40	64	6.3	1.4	1.9	18	2x 1.9	290
RT8131-50-4M4	50	80	4.4	1	1.2	18	2x 2.2	300
RT8131-63-2M8	63	100	2.8	0.6	0.7	18	2x 2.6	320
Vertical 3-line								
RT8531-25-12M8	25	25	12.8	2.9	3.5	19	2.4	260
RT8531-32-10M1	32	51	10.1	2.3	2.5	19	2.4	260
RT8531-40-6M3	40	64	6.3	1.4	1.9	20	2x 1.9	290
RT8531-50-4M4	50	80	4.4	1	1.2	20	2x 2.2	300
RT8531-63-2M8	63	100	2.8	0.6	0.8	20	2x 2.6	320

Test conditions: Inductance tolerance: +50%, –30%; Resistance tolerance: +15% @ 25°C; Electrical characteristics @ 25°C: ±2°C

* Typical current for forced cooling with 3 m/s. Due to the possible turbulences and degradation of the air stream within an equipment please consider thermal validation.

** Typical stray inductance, max is 0.1% of Ln.

*** Length of pin (dimension P) is always 5.5 mm ± 1 mm.

Product selector

RT8xxx-xx-xMx

- Inductance value (e.g. 1M2 = 1.2mH)
- Nominal input current [A]
- 1: nanocrystalline core
  2: ferrite core
- 2: 2–line choke
  3: 3–line choke
- 1: Horizontal
  5: Vertical
- RT: Schaffner standard ring core choke series “RT”

Examples:

RT8121-32-12M8: Horizontal 2-line choke for 32 A, with 12.8 mH

RT8531-50-4M4: Vertical 3-line choke for 50 A, with 4.4 mH

Distribution Inventory

Up-to-date inventory levels for global distributors is available at

https://products.schaffner.com/stock

Typical Choke Attenuation And Impedance - 2-Line Versions

Per CISPR 17; 50 Ω/50 Ω asym

RT8x21-32-12M8

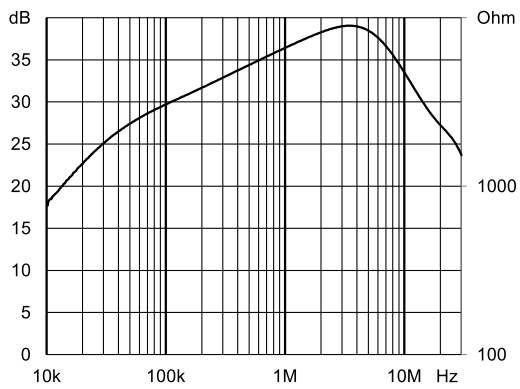

RT8x21-40-10M1

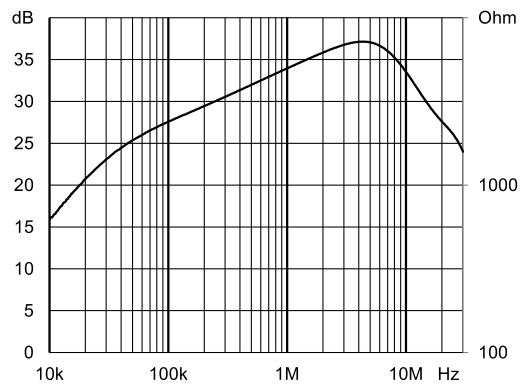

RT8x21-50-8M6

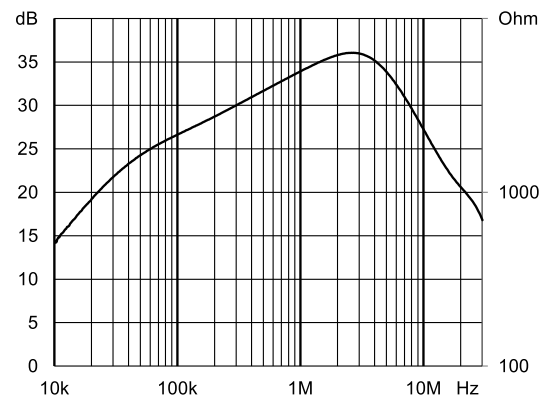

RT8x21-63-4M4

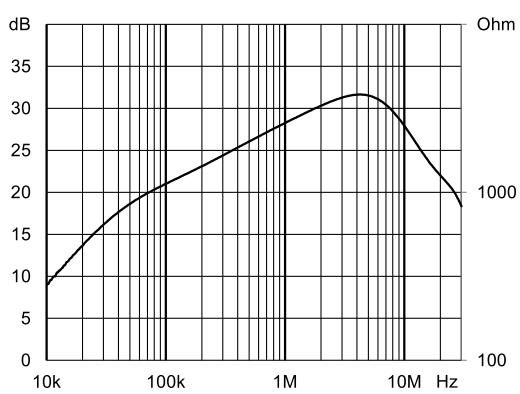

Typical Choke Attenuation And Impedance - 3-Line Versions

Per CISPR 17; 50 Ω/50 Ω asym

RT8x31-25-12M8

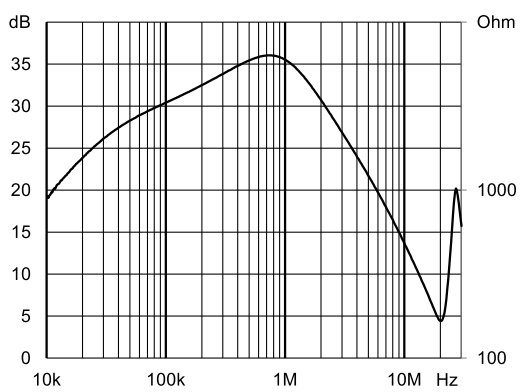

RT8x31-32-10M1

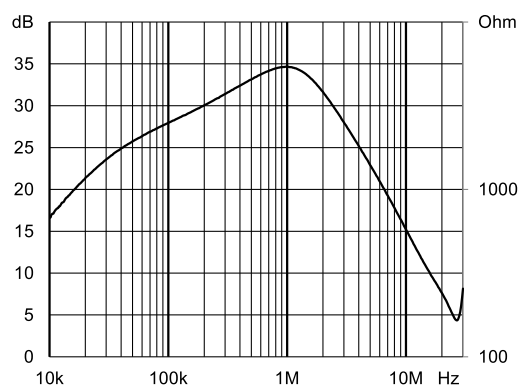

RT8x31-40-6M3

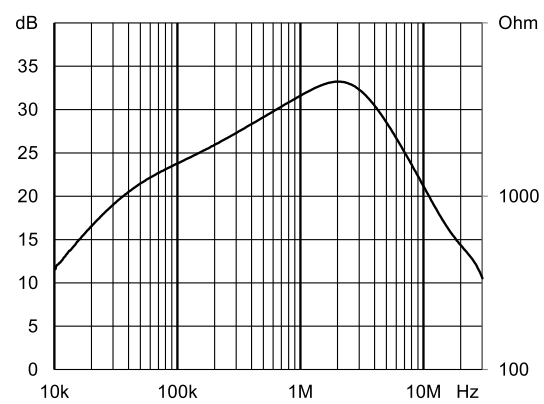

RT8x31-50-4M4

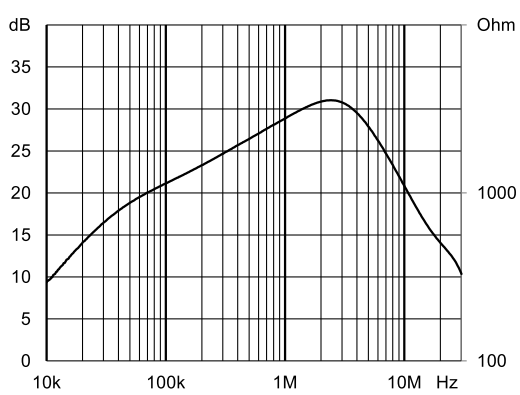

RT8x31-63-2M8

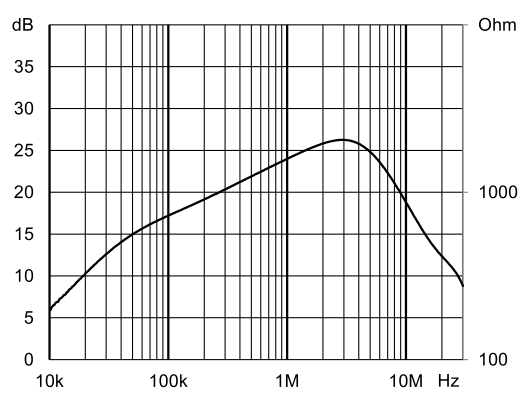

RT 8132

Mechanical Data: Horizontal Chokes

All dimensions in mm; 1 inch = 25.4 mm
Tolerances according: ISO 2768-m/EN 22768-m

Horizontal 2-line chokes (Size 13 & 14)

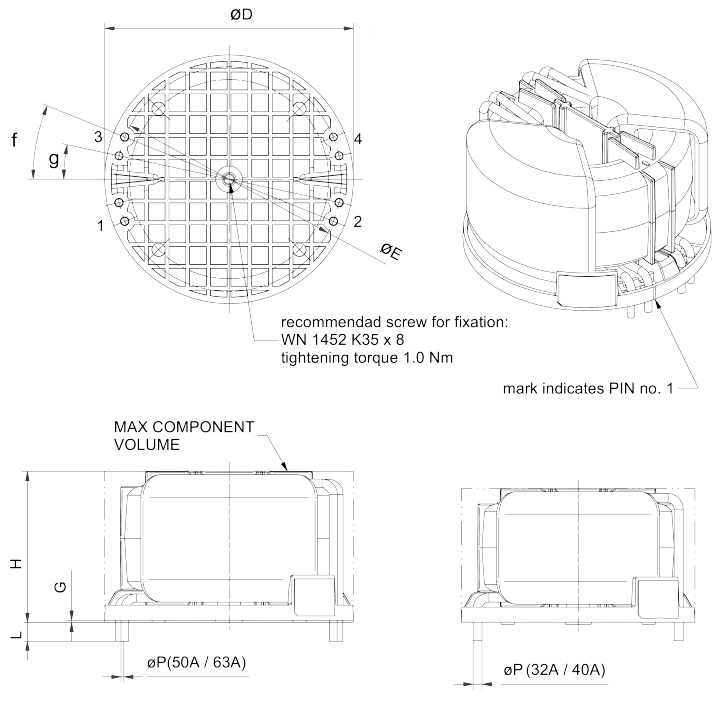

Horizontal 3-line chokes (Size 17 & 18)

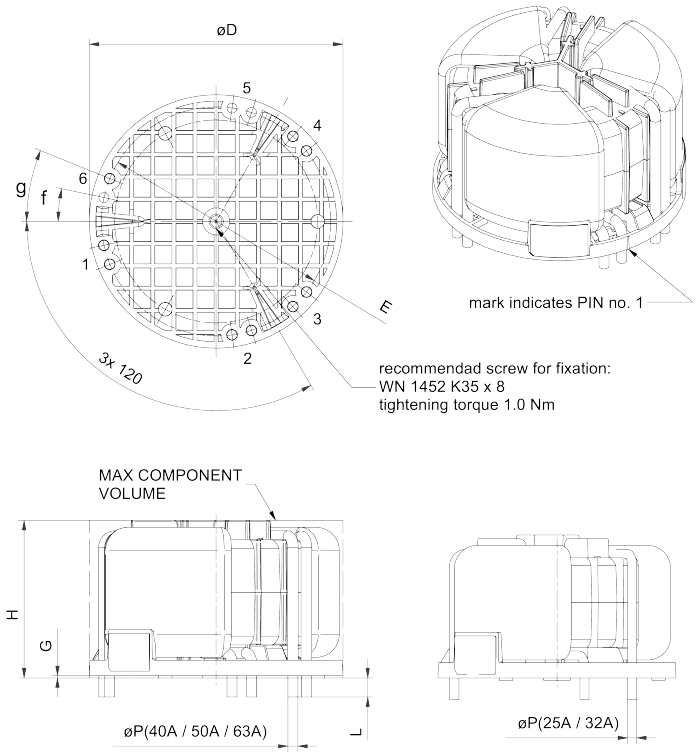

Dimensions

	øD	H	G	øE	f	g	L	øP	øP	øP	øP	øP
								(25A)	(32A)	(40A)	(50A)	(63A)
	±0.2	(max)	±0.1	±0.2	±1°	±1°	±0.5	±0.1	±0.1	±0.1	±0.1	±0.1
Size 13 (RT8121-32-12M8, RT8121-40-10M1)	62	37	0.6	55.4	150°		5		2.4	2.8		
Size 14 (RT8121-50-8M6, RT8121-63-4M4)	66	41	0.6	59.8	120°	220°	5				2x 2.2	2x 2.2
Size 17 (RT8131-25-12M8, RT8131-32-10M1)	62	38	0.6	55.4	150°		5	2.4	2.4			
Size 18 (RT8131-40-6M3, RT8131-50-4M4, RT8131-63-2M8)	66	42	0.6	59.8	120°	220°	5			2x 1.9	2x 2.2	2x 2.6

Mechanical Data: Vertical Chokes

All dimensions in mm; 1 inch = 25.4 mm
Tolerances according: ISO 2768-m/EN 22768-m

Vertical 2-line chokes (Size 15 & 16)

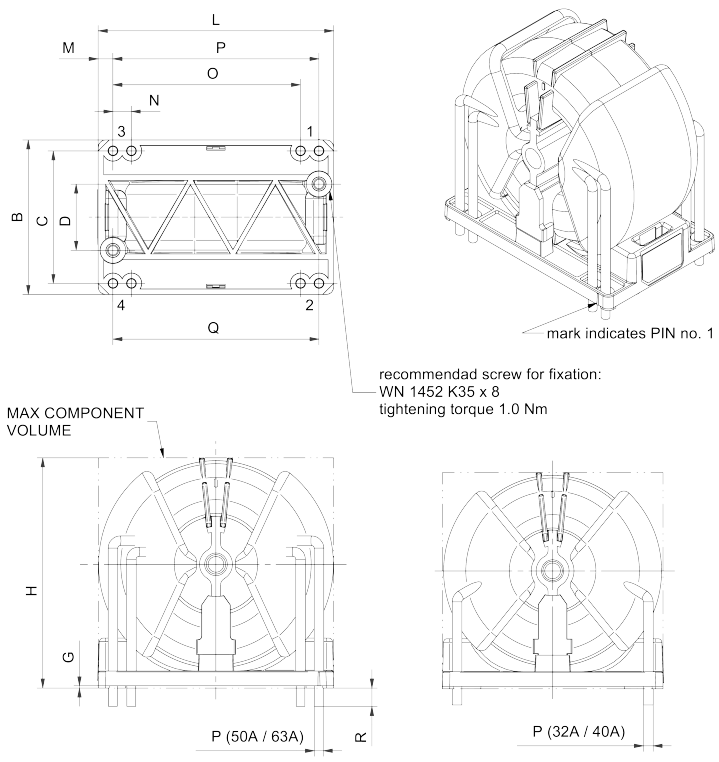

Vertical 3-line chokes (Size 19 & 20)

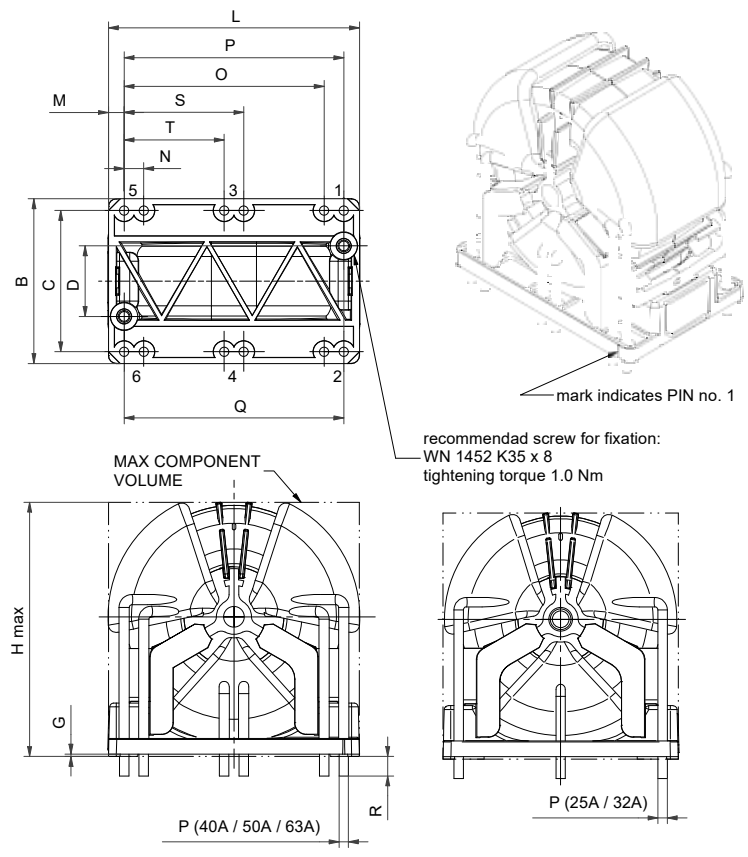

Dimensions

	L	B	H	G	C	D	M	N	O	P	Q	S	T	R	øP	øP	øP	øP	øP
															(25A)	(32A)	(40A)	(50A)	(63A)
	±0.2	±0.2	(max)	±0.1	±0.4	±0.2	±0.1	±0.4	±0.4	±0.4	±0,4	±0.4	±0.2	±0.5	±0.1	±0.1	±0.1	±0.1	±0.1
Size 15 (RT8521-32-12M8, RT8521-40-10M1)	60	38	60	0.6	32	12	4			52	46			5		2.4	2.8		
Size 16 (RT8521-50-8M6, RT8521-63-4M4)	64	42	64	0.6	36	18	4	5	51	56	56			5				2x 2.2	2x 2.2
Size 19 (RT8531-25-12M8, RT8531-32-10M1)	60	38	63	0.6	32	12	4			52	46		26	5	2.4	2.4			
Size 20 (RT8531-40-6M3, RT8531-50-4M4, RT8531-63-2M8)	64	42	67	0.6	36	18	4	5	51	56	56	30.5	25.5	5			2x 1.9	2x 2.2	2x 2.6

Soldering Profile

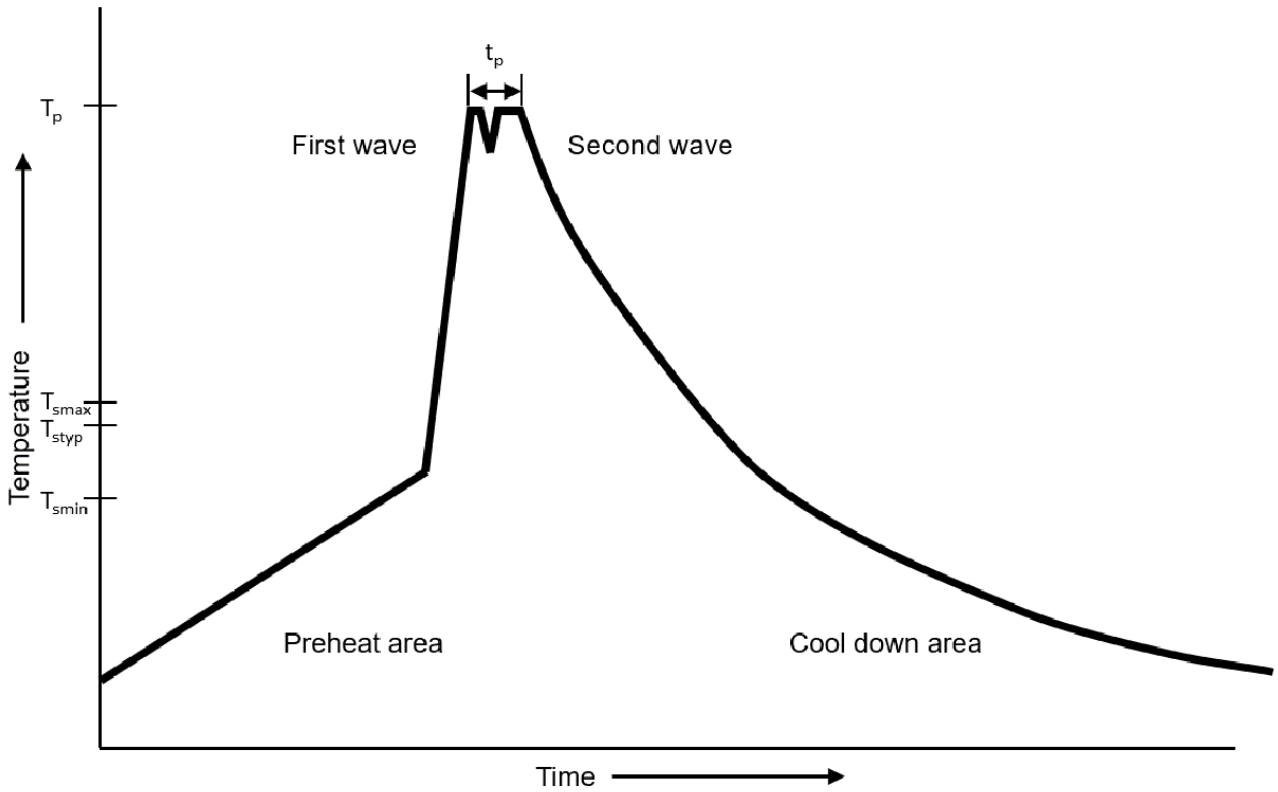

Reference IEC61760-1:2020

Profile Feature		Lead (Pb) Free Solder
Preheat	Temperature min. (T_{smin})	100 °C
	Temperature typ. (T_{styp})	120 °C
	Temperature max. (T_{smax})	130 °C
	Time (T_{smin} to T_{smax})(t_s)	70 seconds
ΔPreheat to max Temperature		150 °C max.
Peak temperature (T_p)		250 °C – 260 °C
Time at peak temperature (t_p)		6 seconds max. 2 seconds each wave
Ramp-down rate		~ 2 K/s min. ~ 3.5 K/s typ. ~ 5 K/s max.
Time 25 °C to 25 °C		4 minutes

Manual solder

350 °C ±10 °C, 10 seconds ± 1s (by soldering iron).

Headquarters, Global Innovation and Development

Switzerland
Schaffner Group
Industrie Nord
Nordstrasse 11e
4542
Luterbach
+41 32 681 66 26
info@schaffner.com

To find your local partner within Schaffner's global network schaffner.com

© 2024 Schaffner Group

The content of this document has been carefully checked and understood. However, neither Schaffner nor its subsidiaries assume any liability whatsoever for any errors or inaccuracies of this document and the consequences thereof. Published specifica-tionsw are subject to change without notice. Product suitability for any area of application must ultimately be determined by the customer. In all cases, products must never be operated outside their published specifications. Schaffner does not guarantee the availability of all published products. This disclaimer shall be governed by substantive Swiss law and resulting disputes shall be settled by the courts at the place of business of Schaffner Holding AG. Latest publications and a complete disclaimer can be downloa-ded from the Schaffner website. All trademarks recognized.

Sales and Application Centers

Finland
Schaffner Oy
Lohjanharjuntie 1109
08500
Lohja
+ 358 50 468 72 84
finlandsales@schaffner.com

France
Schaffner EMC S.A.S.
16-20 Rue Louis Rameau
95875
Bezons
+33 1 34 34 30 60
francesales@schaffner.com

Germany
Schaffner Deutschland GmbH
Ohiostr. 8
76149
Karlsruhe
+49 721 56910
germanysales@schaffner.com

Italy
Schaffner EMC S.r.l.
Via Ticino, 30
20900
Monza (MB)
+39 039 21 41 070
italysales@schaffner.com

Japan
Schaffner EMC K.K.
ISM Sangenjaya 7F
1-32-12 Kamiuma Setagaya-ku
154-0011
Tokyo
+81 3 5712 3650
japansales@schaffner.com

Singapore
Schaffner EMC Pte Ltd.
Blk 3015A Ubi Road 1 #05-09 Kampong Ubi Industrial Estate
408705
Singapore
+65 63773283
singaporesales@schaffner.com

Sweden
Schaffner EMC AB
Östermalmstrorg 1
114 42
Stockholm
+46 8 5050 2425
swedensales@schaffner.com

Switzerland
Schaffner EMV AG
Industrie Nord
Nordstrasse 11e
4542
Luterbach
+41 32 681 66 26
switzerlandsales@schaffner.com

India
Schaffner India Pvt. Ltd
Regus World Trade Centre
WTC 22nd Floor Unit No 2238 Brigade Gateway Campus 26/1 Dr. Rajkumar Road
Malleshwaram (W)
560055
Bangalore
+91 8067935355
indiasales@schaffner.com

United Kingdom
Schaffner Ltd.
Suite 1 Oakmede Place
Terrace Road
RG42 4JF
Binfield
+44 118 9770070
uksales@schaffner.com

United States
Schaffner EMC Inc.
52 Mayfield Avenue
Edison, New Jersey
+1 732 225 9533
usasales@schaffner.com