SURFACE MOUNT LED
HE RED, 1206 IL PACKAGE

BIVAR

SM1206NHC-IL

- **Industry Standard 1206 Package**
- **RoHS Compliant**
- **Water Clear Inner Lens**
- **High Luminous Intensity**
- **Narrow Viewing Angle**
- **Ideal for Status Indication, Display, and Backlighting**

Bivar Surface Mount 1206 Inner Lens package LED may be used in nearly any lighting or indication application. The water clear inner lens provides a narrow viewing angle and high luminous intensity making it suitable for small scale applications such as display, backlighting, and general indication. Low power consumption and excellent long life reliability are ideal for battery powered equipment. Wide variety of wavelength and intensity combinations are available to meet any illumination need. The SM1206-IL LED is packaged in standard tape and reels for pick and place assemblies.

Part Number	Material	Emitted Color	Peak Wavelength λp(nm) TYP.	Lens Appearance	Luminous Intensity (mcd) TYP.	Viewing Angle
SM1206NHC-IL	AlGaInP	RED	630	Water Clear	1250	30°

Outline Dimensions

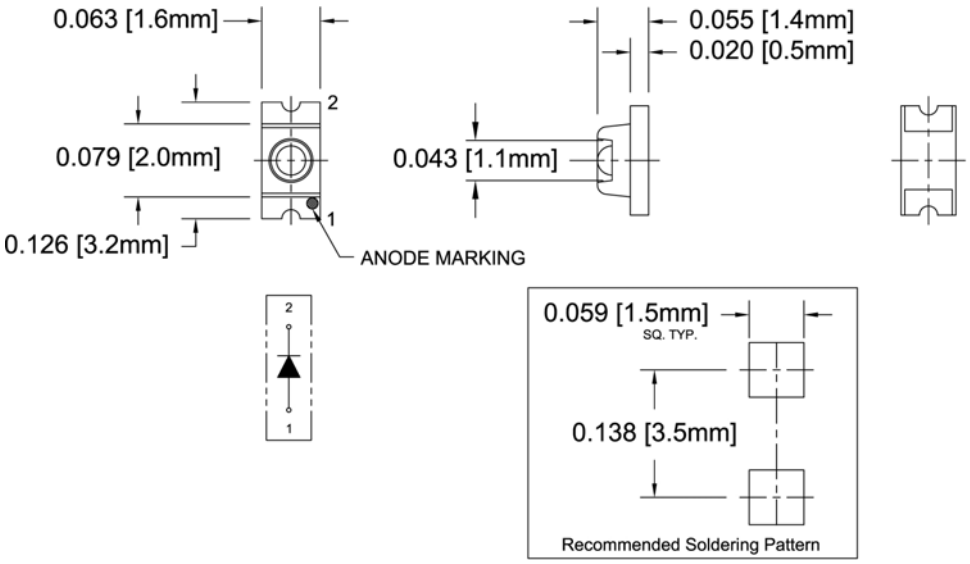

Outline Drawings Notes:
1. All dimensions are in inches [millimeters].
2. Standard tolerance: ±0.010" unless otherwise noted.

ATTENTION OBSERVE PRECAUTIONS FOR HANDLING ELECTROSTATIC SENSITIVE DEVICES

RoHS Compliant

Moisture Sensitivity Level 4

Bivar reserves the right to make changes at any time without notice.

sales@prom-elec.com / ООО ПРОМЭЛЕКТРОНИКА

Absolute Maximum Ratings

T_A = 25°C unless otherwise noted

Power Dissipation	78 mW
Forward Current (DC)	30 mA
Peak Forward Current [1]	100 mA
Reverse Voltage	5 V
Operating Temperature Range	-30 ~ +80°C
Storage Temperature Range	-40 ~ +85°C
Lead Soldering Temperature (3 mm from the base of the epoxy bulb) [2]	260°C

Notes: 1. 10% Duty Cycle, Pulse Width ≤ 0.1 msec. 2. Solder time less than 5 seconds at temperature extreme.

Electrical / Optical Characteristics

T_A = 25°C & I_F = 20 mA unless otherwise noted

Part Number	Forward Voltage (V)[1]			Recommend Forward Current (mA)			Reverse Current (μA)	Dominant Wavelength (nm)[2]			Luminous Intensity Iv (mcd)			Viewing Angle 2 Θ ½ (deg)
	MIN	TYP	MAX	MIN	TYP	MAX	MAX	MIN	TYP	MAX	MIN	TYP	MAX	TYP
SM1206NHC-IL	/	2.1	2.6	/	20	/	10	/	625	/	650	1250	/	30

Notes: 1. Tolerance of forward voltage : ±0.05V. 2. Tolerance of dominant wavelength : ±5.0nm.

Bivar reserves the right to make changes at any time without notice.

Typical Electrical / Optical Characteristics

T_A = 25°C unless otherwise noted

Forward Current Vs. Forward Voltage

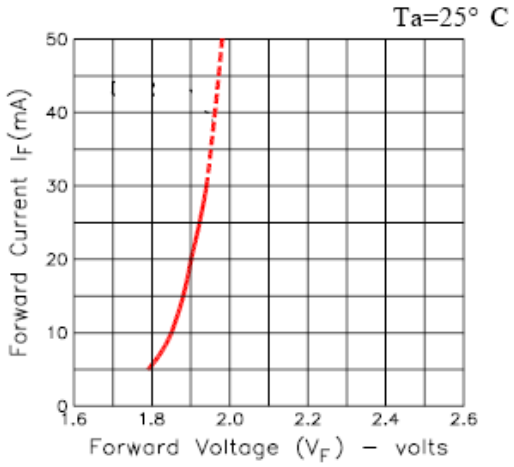

Luminous Intensity Vs. Forward Current

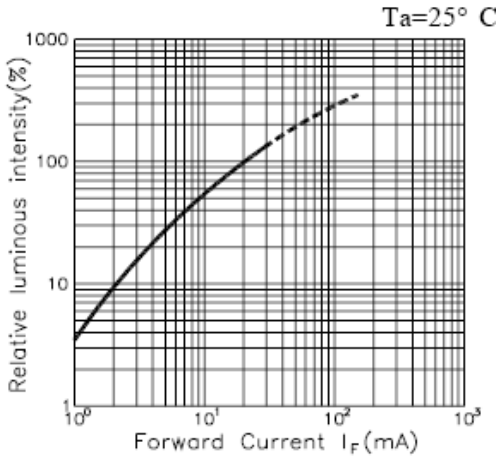

Forward Current Derating Curve

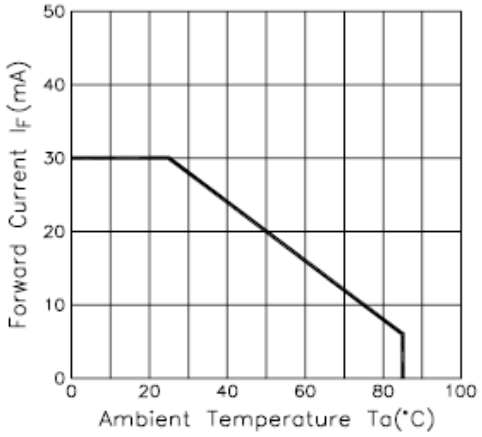

Radiation Diagram

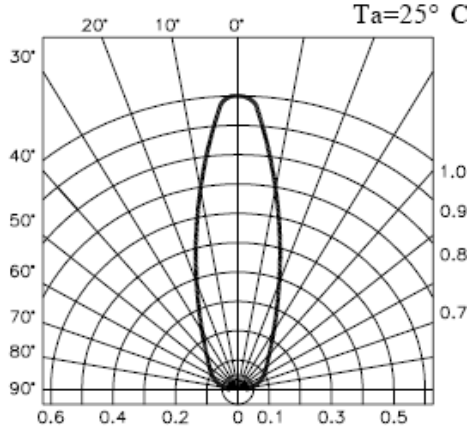

Spectrum Distribution

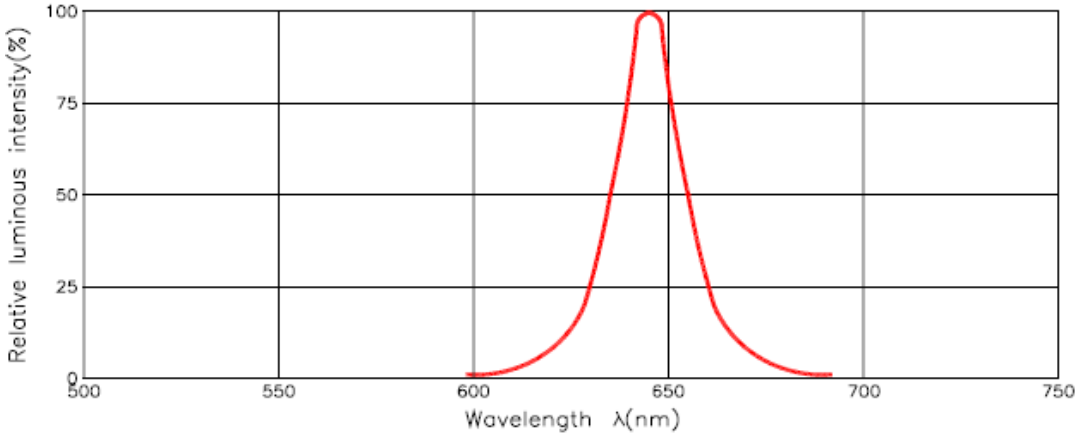

Bivar reserves the right to make changes at any time without notice.

Recommended Soldering Conditions

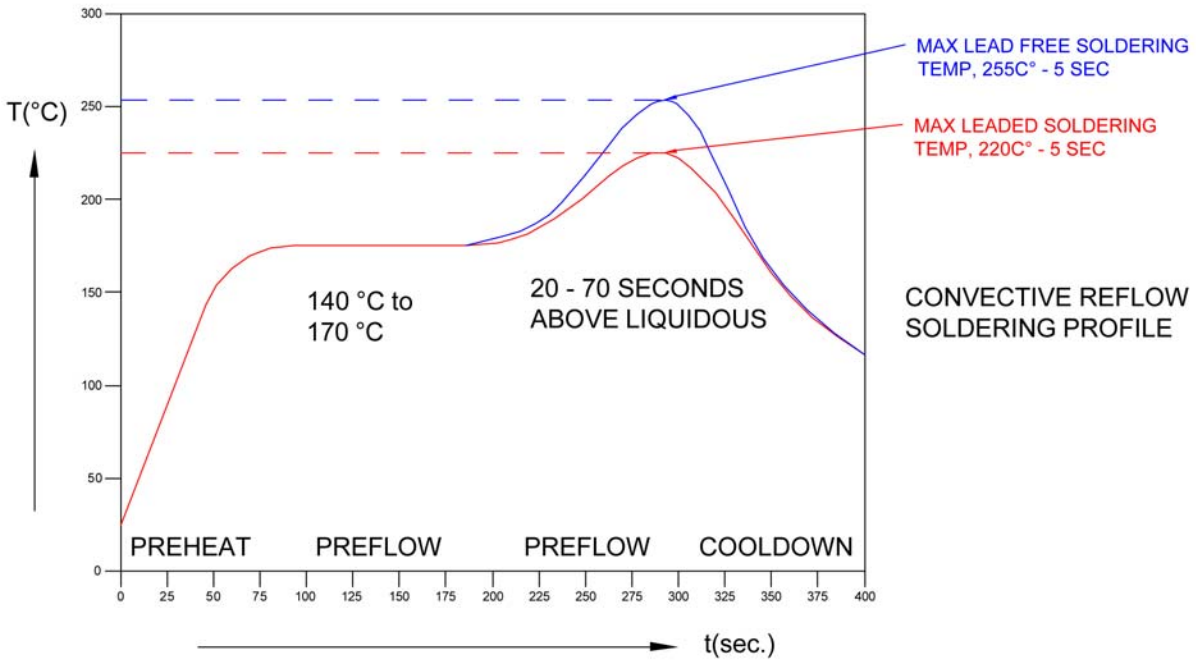

Tape and Reel Dimensions

Note: 3000 pcs/Reel

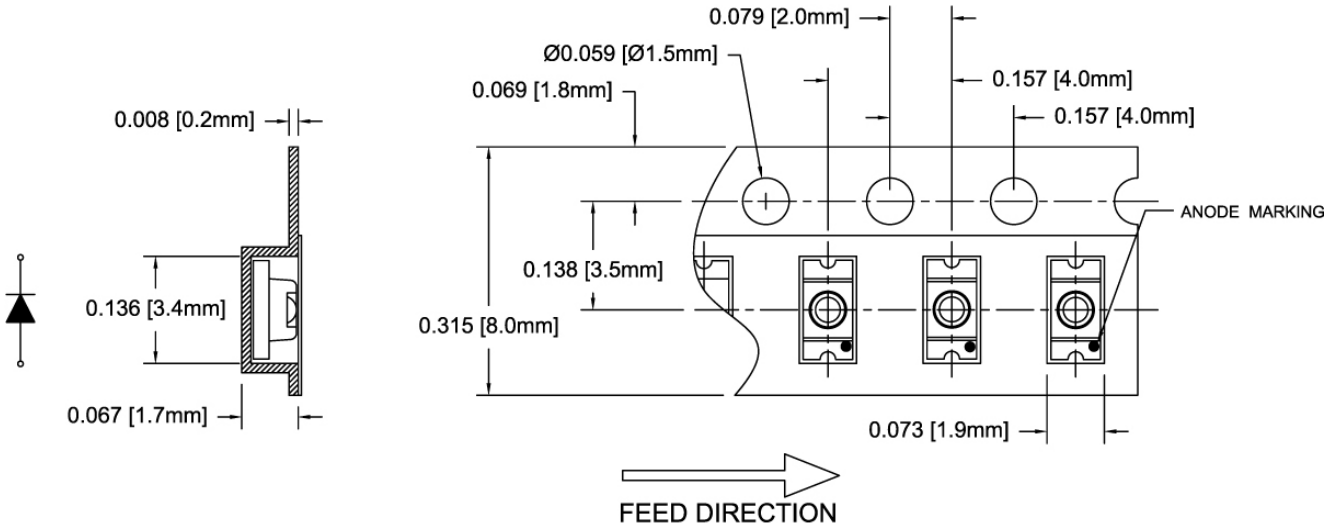

Outline Drawings Notes:
1. All dimensions are in inches [millimeters].
2. Standard tolerance: ±0.010" unless otherwise noted.

Bivar reserves the right to make changes at any time without notice.

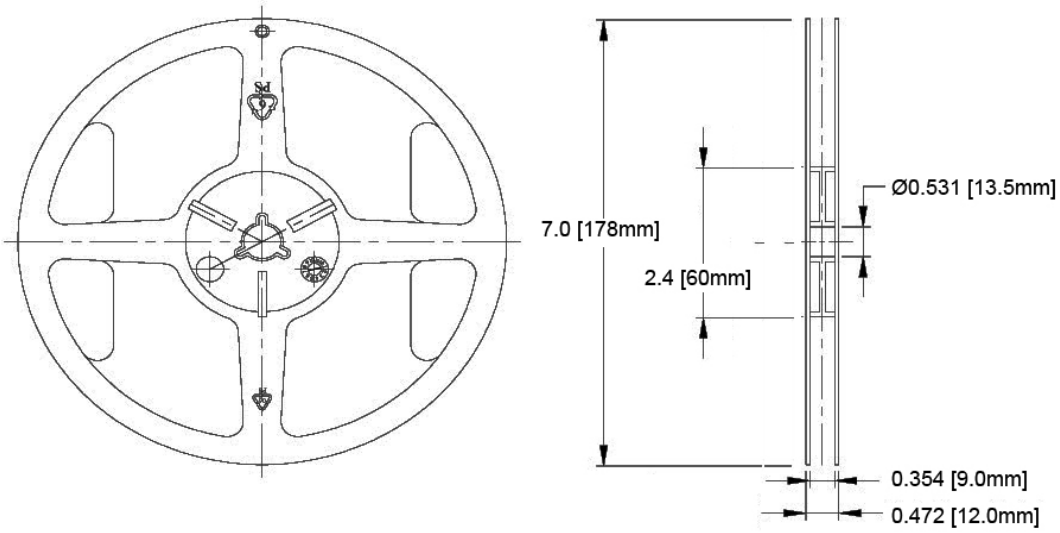

Outline Drawings Notes:
1. All dimensions are in inches [millimeters].
2. Standard tolerance unless otherwise noted: X.XXX ± 0.010"
   X.X ± 0.1"

Packaging and Labeling Plan

Note: 1 Reel / Bag

Vacuum and Heat Sealed
ESD/MBB Bag

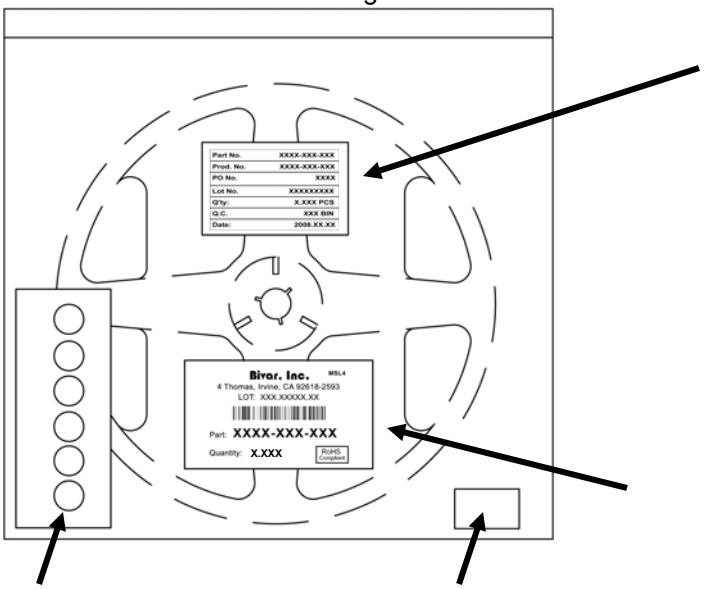

Humidity Indicator
Card

Desiccants

Part No.	XXXX-XXX-XXX
Prod. No.	XXXX-XXX-XXX
PO No.	XXXX
Lot No.	XXXXXXXXX
Q'ty:	X.XXX PCS
Q.C.	XXX BIN
Date:	2008.XX.XX

Internal Quality Control

Bivar Standard Packaging Label