Single Color Multi-Voltage LED

3mm Round LED

OSXX314XA-VV

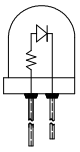

■Description

This LED builds with internal resistor to operate with wide operation voltage of DC3-15V.

■Outline Dimension

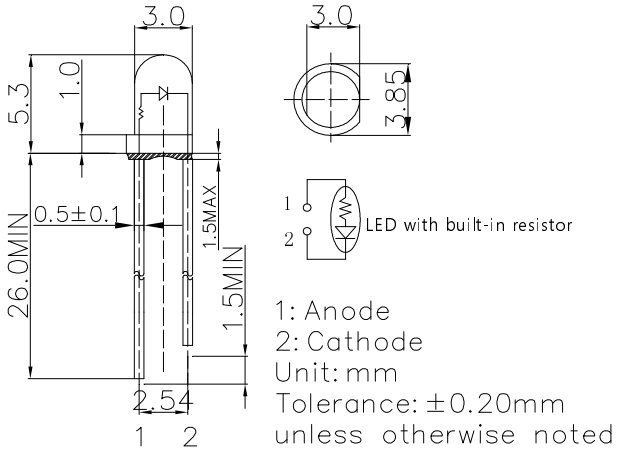

■Features

- Wide Input Voltage
- Cost Saving and Space Saving
- Diffused Type
- Single Color

■Applications

- Toys/Game/Audio
- TTL/Cmos Compatible
- Arduino/Pi Pico/Steam Kit
- Other Electronics Products

■Directivity

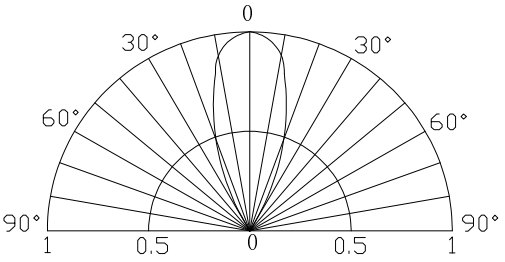

■Absolute Maximum Rating (Ta=25℃)

Item	Symbol	Value	Unit
DC Forward Voltage	V_F	15	V
Reverse Voltage	V_R	12	V
Power Dissipation	P_D	190	mW
Operating Temperature	Topr	-30 ~ +85	℃
Storage Temperature	Tstg	-40~ +100	℃
Lead Soldering Temperature	Tsol	260℃/5sec	-

■Optical Characteristic Curves

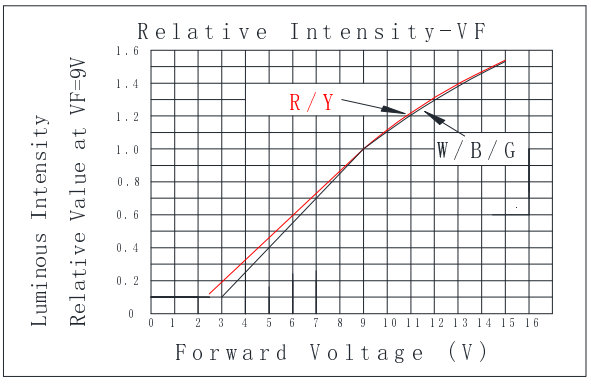

■Electrical -Optical Characteristics (Ta=25℃)

3mm Multi-Voltage LED						
LED P/N	OSR53144A-VV	OSY53144A-VV	OSB53144A-VV	OSG53144A-VV	OSM53142A-VV	OSW53142A-VV
Light Color	Red	Yellow	Blue	Pure Green	Warm White	Cool White
Lens Color	Red Diffused	Yellow Diffused	Blue Diffused	Green Diffused	White Diffused	White Diffused
Wavelength*1/Color Temperature*2	620-630nm	585-595nm	465-475m	520-530nm	2700-3300K	8500-18000K
Luminous Intensity(typ.)*3	400mcd	400mcd	300mcd	1560mcd	1560mcd	1560mcd
Forward Voltage(typ.)	9V	9V	9V	9V	9V	9V
Forward Current(typ.)	8mA	8mA	7.5mA	7.5mA	7.5mA	7.5mA
Viewing Angle(typ.)	40°	40°	40°	40°	40°	40°

*1 Tolerance of measurements of dominant wavelength is ±1nm
*2 Tolerance of measurements of color temperature is ±10%
*3 Tolerance of measurements of luminous intensity is ±15%

LED & Application Technologies

ISO 9001: 2008

ATTENTION
OBSERVE PRECAUTIONS
ELECTROSTATIC
SENSITIVE DEVICES

sales@prom-elec.com / ООО ПРОМЭЛЕКТРОНИКА