BAHCO

2101G

ERGO™ Side Cutting Pliers with Self Opening Dual-Component Handle and Phosphate Finish

PRODUCT DETAILS

- Two-component ERGO™ handles: thermoplastic surface on tough polypropylene provides superior grip
- Side cutting pliers developed according to the scientific ERGO™ process
- Suitable for cutting Cu, Fe+ and piano wire
- Distance from joint to centre of cutting edges is reduced for greater leverage and increased cutting capacity
- Equipped with a patented return spring featuring an on/off function
- High-performance alloy steel
- Phosphate finish, anti-corrosion treated

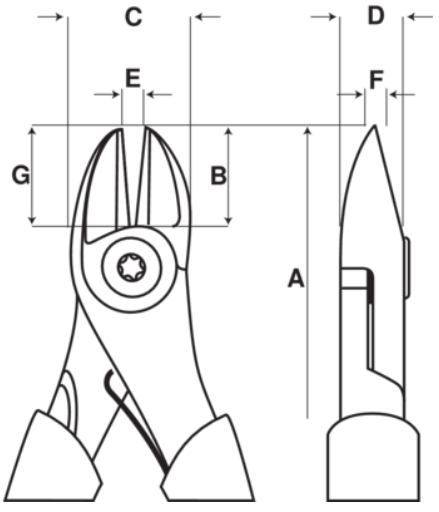

Follow the Fish!

sales@prom-elec.com / ООО ПРОМЭЛЕКТРОНИКА

PRODUCT ATTRIBUTES

Product	A	B	C	D	E	Cu	Fe+	Piano	g
2101G-125	125 mm	14.2 mm	17 mm	8 mm	1 mm	3.5 mm	1.8 mm	1.6 mm	90 g
2101G-140	140 mm	16,4 mm	19 mm	8 mm	1,5 mm	3.7 mm	2.0 mm	1.8 mm	120 g
2101G-160	160 mm	18,1 mm	21 mm	9 mm	2 mm	3.8 mm	2.5 mm	2.0 mm	170 g
2101G-180	180 mm	20 mm	23 mm	10 mm	2 mm	4.0 mm	2.7 mm	2.3 mm	230 g
2101G-125IP	125 mm	14.2 mm	17 mm	8 mm	1 mm	3.5 mm	1.8 mm	1.6 mm	90 g
2101G-140IP	140 mm	16,4 mm	19 mm	8 mm	1,5 mm	3.7 mm	2.0 mm	1.8 mm	120 g
2101G-160IP	160 mm	18,1 mm	21 mm	9 mm	2 mm	3.8 mm	2.5 mm	2.0 mm	170 g
2101G-180IP	180 mm	20 mm	23 mm	10 mm	2 mm	4.0 mm	2.7 mm	2.3 mm	230 g