Technical Data
Data Sheet N1262, Rev. A

SDUR530/SDURB530/SDURD530/SDURF530
ULTRAFAST RECTIFIER

Applications

- Antiparallel diode for high frequency switching devices
- Anti saturation diode
- Snubber diode
- Free wheeling diode in converters and motor control circuits
- Rectifiers in switch mode power supplies (SMPS)
- Inductive heating and melting
- Uninterruptible power supplies (UPS)
- Ultrasonic cleaners and welders

Features

- Ultra-Fast Switching
- High Current Capability
- Low Reverse Leakage Current
- High Surge Current Capability
- Plastic Material has UL Flammability Classification 94V-O
- "-A" is an AEC-Q101 qualified device
- This is a Pb − Free Device
- All SMC parts are traceable to the wafer lot
- Additional testing can be offered upon request

SDUR530	SDURB530	SDURD530	SDURF530
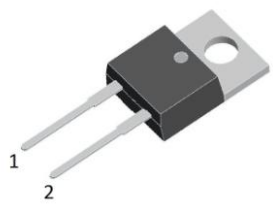	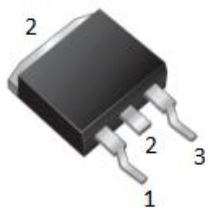	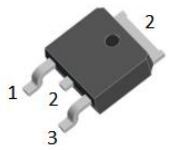	
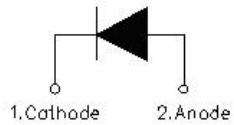	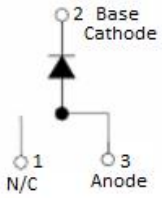	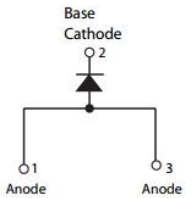	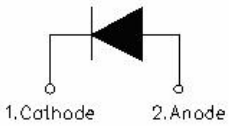
TO-220AC	D^2PAK	DPAK	ITO-220AC

Maximum Ratings:

Characteristics	Symbol	Condition	Max.	Units
Peak Repetitive Reverse Voltage Working Peak Reverse Voltage DC Blocking Voltage	V_{RRM} V_{RWM} V_R	-	300	V
Average Rectified Forward Current	$I_{F\ (AV)}$	50% duty cycle @Tc=105°C, rectangular wave form	5	A
Peak One Cycle Non-Repetitive Surge Current	I_{FSM}	8.3ms, Half Sine pulse	70	A

sales@prom-elec.com / ООО ПРОМЭЛЕКТРОНИКА

Technical Data
Data Sheet N1262, Rev. A

RoHS Pb

Electrical Characteristics:

Characteristics	Symbol	Condition	Typ.	Max.	Units
Forward Voltage Drop*	V_{F1}	@ 5A, Pulse, T_J = 25 °C	0.96	1.3	V
	V_{F2}	@ 5A, Pulse, T_J = 125 °C	0.88	1.2	V
Reverse Current*	I_{R1}	@V_R = rated V_R T_J = 25 °C	0.04	30	μA
	I_{R2}	@V_R = rated V_R T_J = 125 °C	15	500	μA
Reverse Recovery Time	t_{rr}	I_F=500mA, I_R=1A,and I_{rm}=250mA	32	45	ns

* Pulse width < 300 μs, duty cycle < 2%

Thermal-Mechanical Specifications:

Characteristics	Symbol	SDUR530	SDURB530	SDURD530	SDURF530	Units
Junction Temperature	T_J	-55 to +150				°C
Storage Temperature	T_{stg}	-55 to +150				°C
Typical Thermal Resistance Junction to Case	$R_{\theta JC}$	2.3	2.3	1.7	4.2	°C/W
Case Style	TO-220AC/ D^2PAK/ DPAK/ ITO-220AC					

Tube Specification

Device	Package	Weight	Shipping
SDUR530	TO-220AC	1.6g	50pcs / tube
SDURB530	D^2 PAK	1.85g	800pcs / reel
SDURB530TR	D^2 PAK	1.85g	800pcs / reel
SDURD530	DPAK	0.39g	2500pcs / reel
SDURD530TR	DPAK	0.39g	2500pcs / reel
SDURF530	ITO-220AC	1.6g	50pcs / tube

For information on tape and reel specifications, including part orientation and tape sizes, please refer to our tape and reel packaging specification.

Tube Specification(TO-220AC/ITO-220AC)

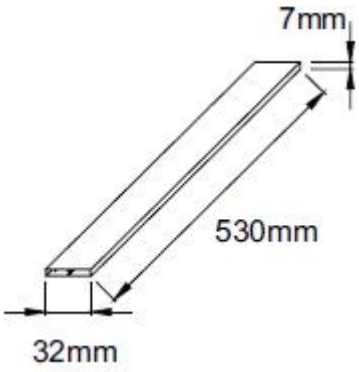

Ratings and Characteristics Curves

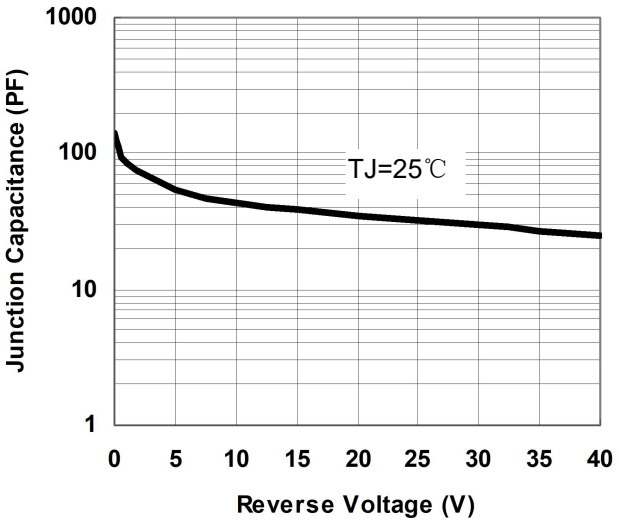

Fig.1-Typical Junction Capacitance

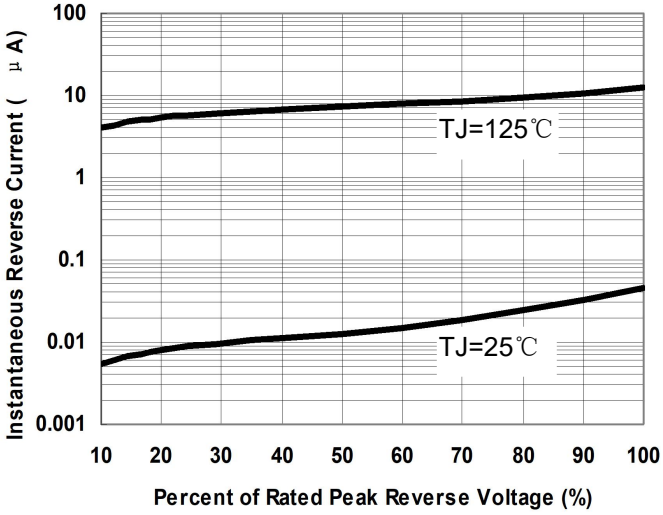

Fig.2-Typical Reverse Characteristics

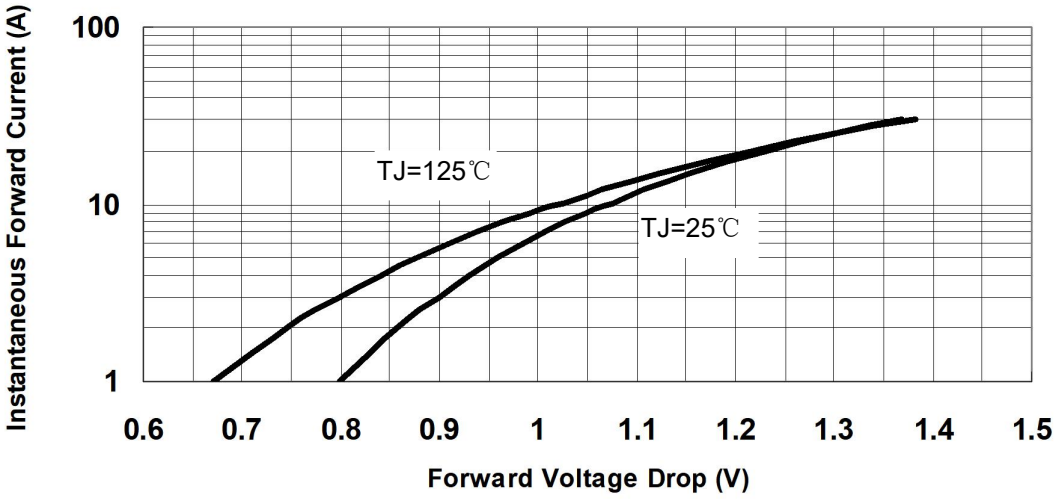

Fig.3-Typical Instantaneous Forward Voltage Characteristics

Technical Data
Data Sheet N1262, Rev. A

RoHS Pb

Marking Diagram

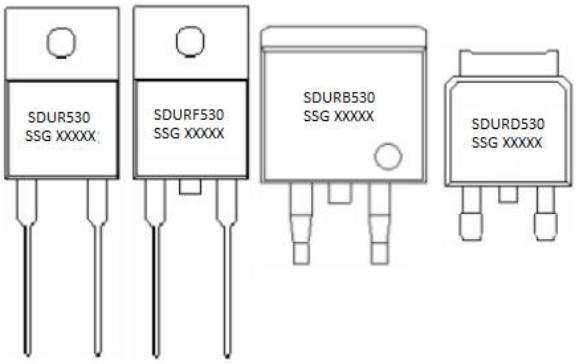

Where XXXXX is YYWWL

SDUR	= Device Type
B/D/F	= Package type
5	= Forward Current (5A)
300	= Reverse Voltage (300V)
SSG	= SSG
YY	= Year
WW	= Week
L	= Lot Number

Cautions: Molding resin
Epoxy resin UL:94V-0

Carrier Tape & Reel Specification DPAK

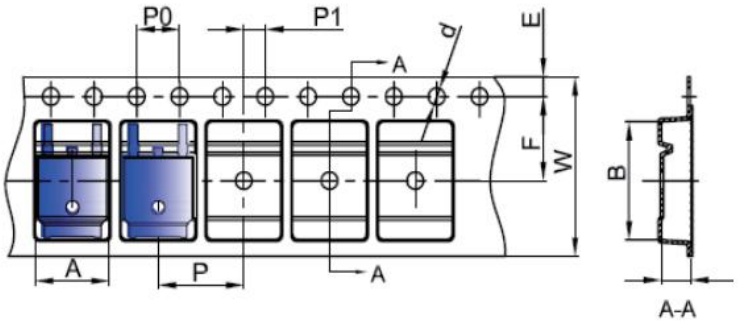

SYMBOL	Millimeters	
	Min.	Max.
A	6.80	7.00
B	10.40	10.60
C	2.60	2.80
d	Φ1.45	Φ1.65
E	1.65	1.85
F	7.40	7.60
P0	3.90	4.10
P	7.90	8.10
P1	1.90	2.10
W	15.90	16.30

Carrier Tape & Reel Specification D²PAK

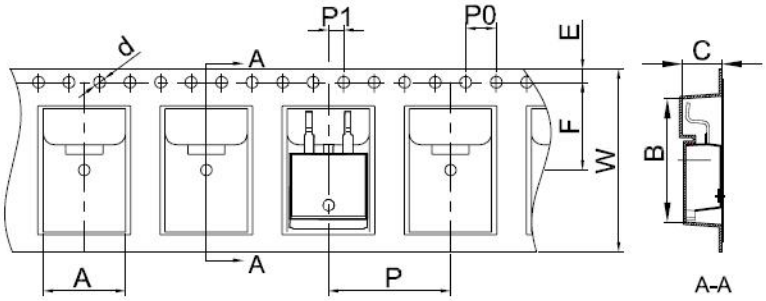

SYMBOL	Millimeters	
	Min.	Max.
A	10.70	10.90
B	16.03	16.23
C	5.11	5.31
d	1.45	1.65
E	1.65	1.85
F	11.40	11.60
P0	3.90	4.10
P	15.90	16.10
P1	1.90	2.10
W	23.90	24.30

Technical Data
Data Sheet N1262, Rev. A

RoHS Pb

Mechanical Dimensions TO-220AC

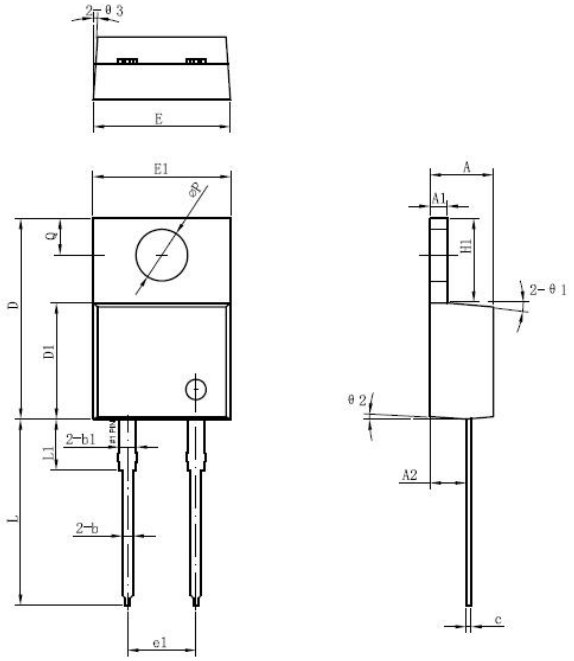

Symbol	Dimensions in millimeters		
	Min.	Typical	Max.
A	4.47	4.70	4.85
A1	1.17	1.27	1.37
A2	2.52	2.69	2.89
b	0.71	0.81	0.96
b1	1.17	1.27	1.37
c	0.31	0.38	0.61
D	14.64	14.94	15.24
D1	8.50	8.07	8.90
E	10.01	10.16	10.31
E1	9.98	10.18	10.38
e1	4.98	5.08	5.18
H1	6.04	6.24	6.44
L	13.00	13.86	14.08
L1	3.56	3.80	3.96
ΦP	3.74	3.84	4.04
Q	2.54	2.74	2.94
Θ1		5°	
Θ2		4°	
Θ3		4°	

Mechanical Dimensions DPAK

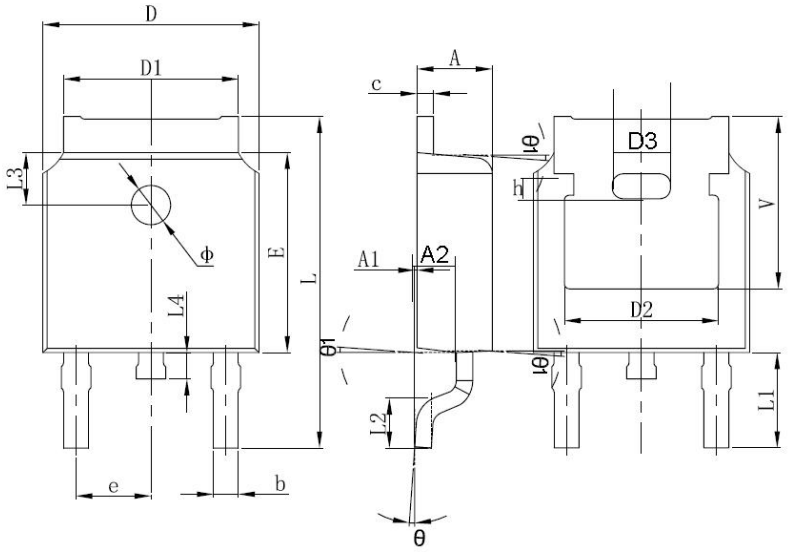

SYMBOL	Millimeters		Inches	
	Min.	Max.	Min.	Max.
A	2.20	2.40	0.087	0.094
A1	0.00	0.127	0.000	0.005
b	0.66	0.86	0.026	0.034
c	0.46	0.60	0.018	0.024
D	6.50	6.70	0.256	0.264
D1	5.13	5.46	0.202	0.215
D2	4.83 REF.		0.190 REF.	
E	6.00	6.20	0.236	0.244
e	2.186	2.386	0.086	0.094
L	9.70	10.40	0.381	0.409
L1	2.90 REF.		0.144 REF.	
L2	1.40	1.70	0.055	0.067
L3	1.60 REF.		0.063 REF.	
L4	0.60	1.00	0.024	0.039
Φ	1.10	1.30	0.043	0.051
Θ	0°	8°	0°	8°
h	0.00	0.30	0.000	0.012
V	5.35 REF.		0.211 REF.	

Technical Data
Data Sheet N1262, Rev. A

RoHS Pb

Mechanical Dimensions D²PAK

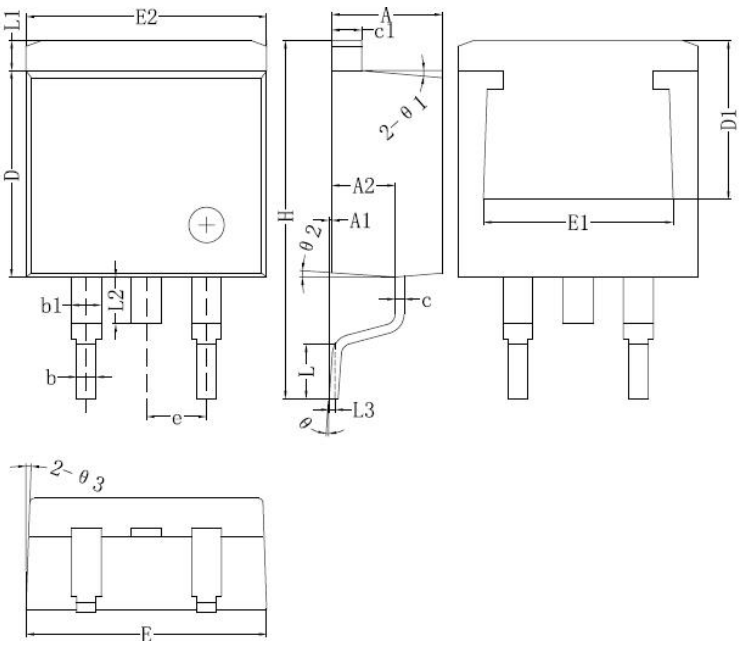

Symbol	Dimensions in millimeters		
	Min.	Typical	Max.
A	4.47	4.70	4.85
A1	0	0.10	0.25
A2	2.59	2.69	2.89
b	0.71	0.81	0.96
b1	1.17	1.27	1.37
c	0.31	0.38	0.61
c1	1.17	1.27	1.37
D	8.50	8.70	8.90
D1	6.40		
E	10.01	10.16	10.31
E1	7.6		
E2	9.98	10.08	10.31
e		2.54	
H	14.6	15.1	15.6
L	2.00	2.30	2.74
L1	1.12	1.27	1.42
L2	1.30		2.20
L3		0.25BSC	
e	0	-	8°
e1		5°	
e2		4°	
e3		4°	

Mechanical Dimensions ITO-220AC

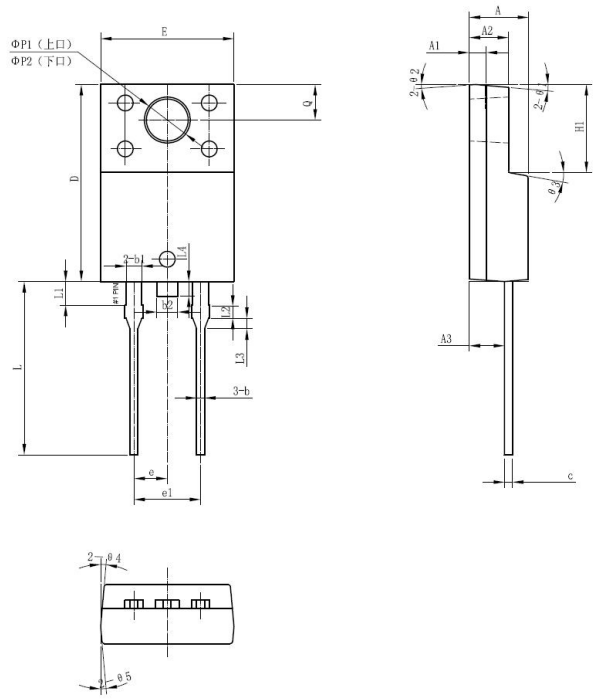

SYMBOL	Millimeters		
	MIN.	TYP.	MAX.
A	4.30	4.50	4.70
A1	1.10	1.30	1.50
A2	2.80	3.00	3.20
A3	2.50	2.70	2.90
b	0.50	0.60	0.75
b1	1.10	1.20	1.35
b2	1.50	1.60	1.75
c	0.50	0.60	0.75
D	14.80	15.00	15.20
E	9.96	10.16	10.36
e	-	2.55	-
e1	5.00	5.10	5.16
H1	6.50	6.70	6.90
L	12.70	13.20	13.70
L1	1.60	1.80	2.00
L2	0.80	1.00	1.20
L3	0.60	0.80	1.00
L4	-	1.10	1.50
ΦP1(上口)	3.30	3.50	3.70
ΦP2(下口)	2.99	3.19	3.39
Q	2.50	2.70	2.90
Θ1		5°	
Θ2		4°	
Θ3		10°	
Θ4		5°	
Θ5		5°	

Technical Data
Data Sheet N1262, Rev. A

DISCLAIMER:
1- The information given herein, including the specifications and dimensions, is subject to change without prior notice to improve product characteristics. Before ordering, purchasers are advised to contact the SMC Diode Solutions sales department for the latest version of the datasheet(s).
2- In cases where extremely high reliability is required (such as use in nuclear power control, aerospace and aviation, traffic equipment, medical equipment , and safety equipment) , safety should be ensured by using semiconductor devices that feature assured safety or by means of users' fail-safe precautions or other arrangement .
3- In no event shall SMC Diode Solutions be liable for any damages that may result from an accident or any other cause during operation of the user's units according to the datasheet(s). SMC Diode Solution assumes no responsibility for any intellectual property claims or any other problems that may result from applications of information, products or circuits described in the datasheets.
4- In no event shall SMC Diode Solutions be liable for any failure in a semiconductor device or any secondary damage resulting from use at a value exceeding the absolute maximum rating.
5- No license is granted by the datasheet(s) under any patents or other rights of any third party or SMC Diode Solutions.
6- The datasheet(s) may not be reproduced or duplicated, in any form, in whole or part, without the expressed written permission of SMC Diode Solutions.
7- The products (technologies) described in the datasheet(s) are not to be provided to any party whose purpose in their application will hinder maintenance of international peace and safety nor are they to be applied to that purpose by their direct purchasers or any third party. When exporting these products (technologies), the necessary procedures are to be taken in accordance with related laws and regulations..