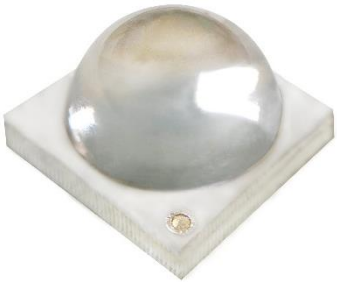

**ProLight PBSD-12KLA-KC**
**12W UVC Power LED**
**Technical Datasheet**
**Version: 1.7**

# ProLight Opto ProEngine Series

## Features

- Inorganic Package
- Quartz Lens
- RoHS compliant
- View angle 60˚

## Main Applications

- Disinfection Devices in Water, Air, Horticulture, Food Safety, Surface Disinfection, Linear UVC LED Arrays



sales@prom-elec.com / ООО ПРОМЭЛЕКТРОНИКА

# Emitter Mechanical Dimensions

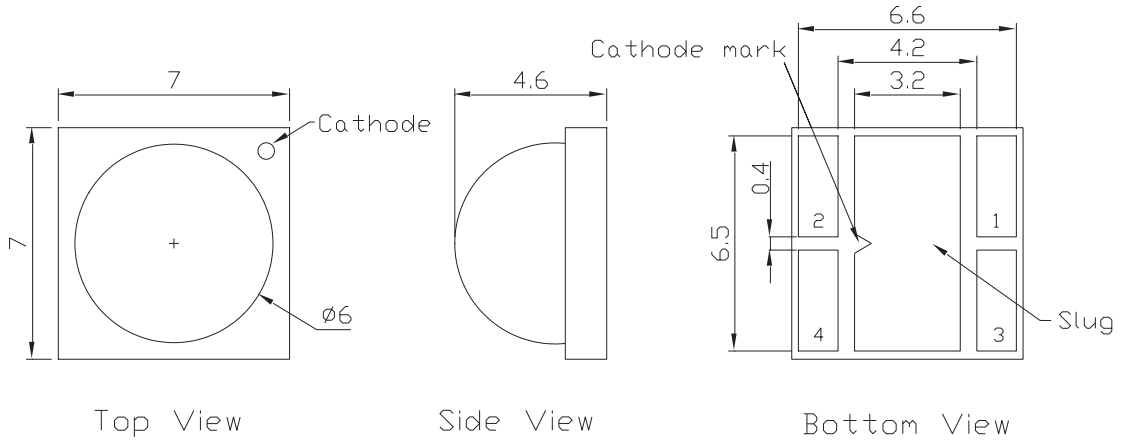


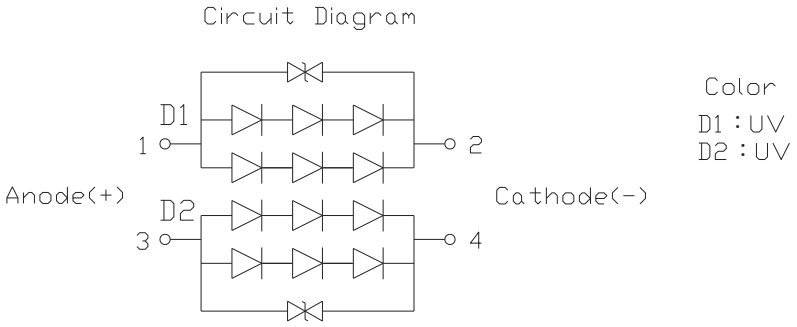


Notes:
1. Electrical insulation between the case and the board is required. Do not electrically connect either the anode or cathode to the slug.
2. Drawing not to scale.
3. All dimensions are in millimeters.
4. Unless otherwise indicated, tolerances are ± 0.1mm.
5. Please do not solder the emitter by manual hand soldering, otherwise it will damage the emitter.
6. **Please do not use a force of over 3kgf impact or pressure on the lens of the LED, otherwise it will cause a catastrophic failure.**

*The appearance and specifications of the product may be modified for improvement without notice.

# Flux Characteristics at 400mA, $T_J$ = 25˚C

| Channel | Radiation Pattern | Color | Part Number Emitter | Radiometric Power (mW) | |
|---|---|---|---|---|---|
| | | | | Minimum | Typical |
| D1<br>D2 | Lambertian | UVC | PBSD-12KLA-KC | 150 | 185 |

- ProLight maintains a tolerance of ± 10% on flux and power measurements.
- Please do not drive at rated current more than 1 second without proper heat sink.

# Electrical Characteristics at 400mA, $T_J$ = 25˚C

| Channel | Color | Forward Voltage $V_F$ (V) | | | Thermal Resistance Junction to Slug (˚C/ W) |
|---|---|---|---|---|---|
| | | Min. | Typ. | Max. | |
| D1<br>D2 | UVC | 15 | 18 | 21 | 2 |

- ProLight maintains a tolerance of ± 0.1V for Voltage measurements.

# Optical Characteristics at 400mA, $T_J$ = 25˚C

| Channel | Color | Peak Wavelength $\lambda_P$ | | | Viewing Angle (FWHM, degrees) |
|---|---|---|---|---|---|
| | | Min. | Typ. | Max. | Typ. |
| D1<br>D2 | UVC | 265 nm | 275 nm | 280 nm | 60 |

- ProLight maintains a tolerance of ± 3nm for peak wavelength measurements.

# Absolute Maximum Ratings

| Parameter | UVC |
|---|---|
| DC Forward Current (mA) | 600 |
| ESD Sensitivity (HBM per MIL-STD-883E Method 3015.7) | ±4000V |
| LED Junction Temperature | 85°C |
| Operating Temperature | -40°C - 60°C |
| Storage Temperature | -40°C - 85°C |
| Soldering Temperature | JEDEC-J-STD-020D |
| Allowable Reflow Cycles | 3 |
| Reverse Voltage | Not designed to be driven in reverse bias |

# Peak Wavelength Bin Structure

| Color | Bin Code | Minimum Peak Wavelength (nm) | Maximum Peak Wavelength (nm) |
|---|---|---|---|
| UVC | A | 265 | 270 |
| | B | 270 | 275 |
| | C | 275 | 280 |

- ProLight maintains a tolerance of ± 3nm for peak wavelength measurements.

# Forward Voltage Bin Structure

| Color | Bin Code | Minimum Voltage (V) | Maximum Voltage (V) |
|---|---|---|---|
| UVC | A | 15 | 16.5 |
| | B | 16.5 | 18 |
| | C | 18 | 19.5 |
| | D | 19.5 | 21 |

- ProLight maintains a tolerance of ± 0.1V for Voltage measurements.

Note: Although several bins are outlined, product availability in a particular bin varies by production run and by product performance. Not all bins are available in all colors.

# Color Spectrum, $T_J$ = 25˚C

1.UVC

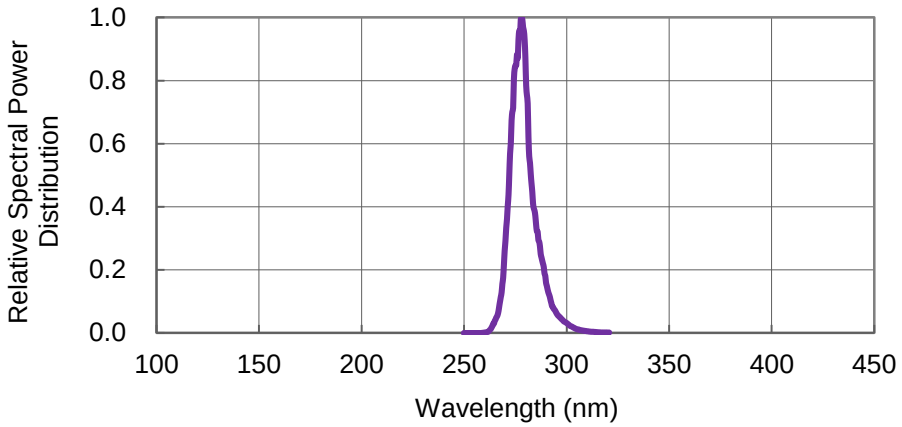


# Forward Current Characteristics, $T_J$ = 25˚C

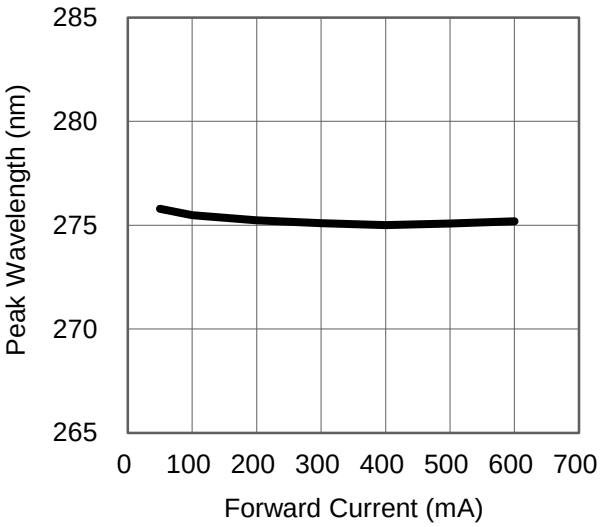


Fig 1. Forward Current vs. Peak Wavelength

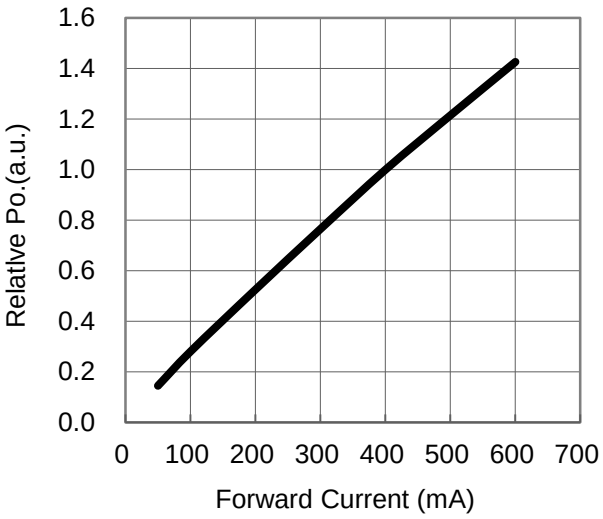


Fig 2. Forward Current vs. Relative Radiant Flux

# Forward Current Characteristics, $T_J$ = 25˚C

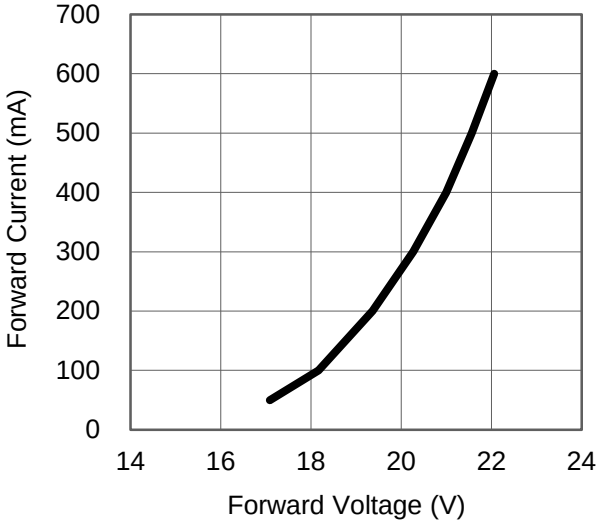


Fig 3. Forward Voltage vs Forward Current

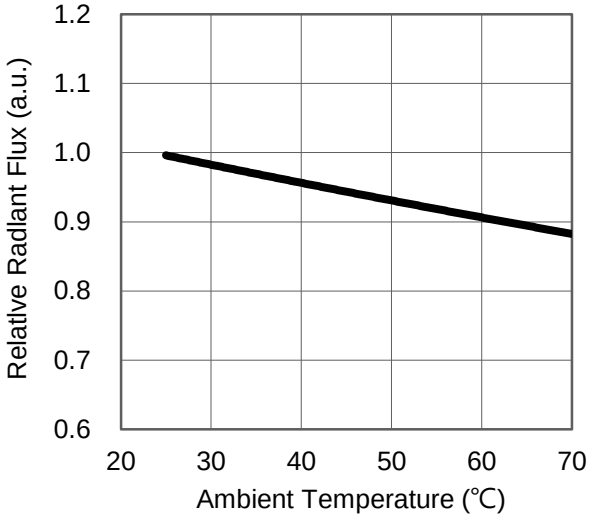


Fig 4. Ambient Temperature vs. Relative Radiant Flux

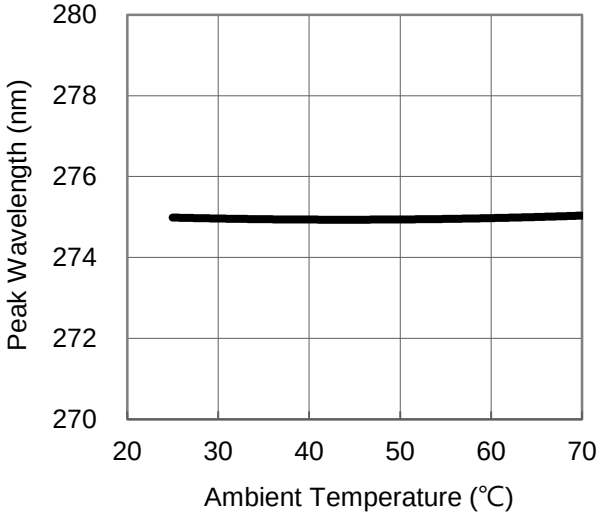


Fig 5. Ambient Temperature vs. Peak Wavelength

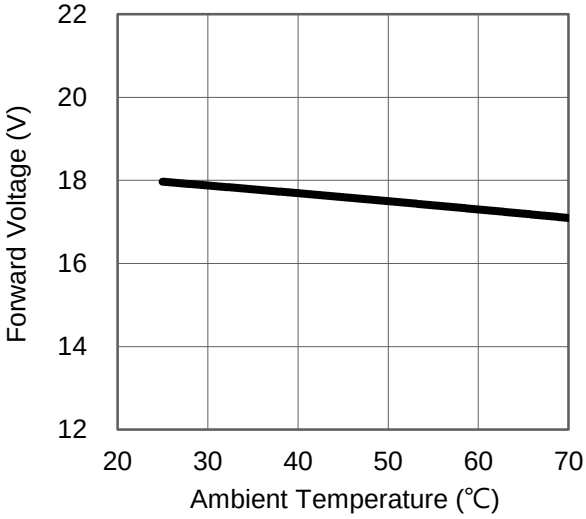


Fig 6. Ambient Temperature vs. Forward Voltage

# Case Temperature vs. Maximum Forward Current

1. UVC ($T_{JMAX}$ = 85˚C)

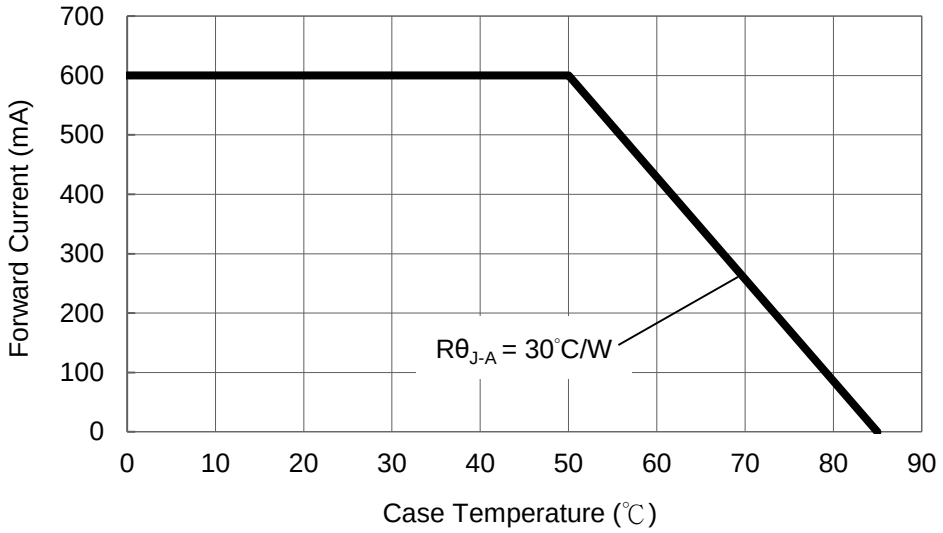


# Typical Representative Spatial Radiation Pattern

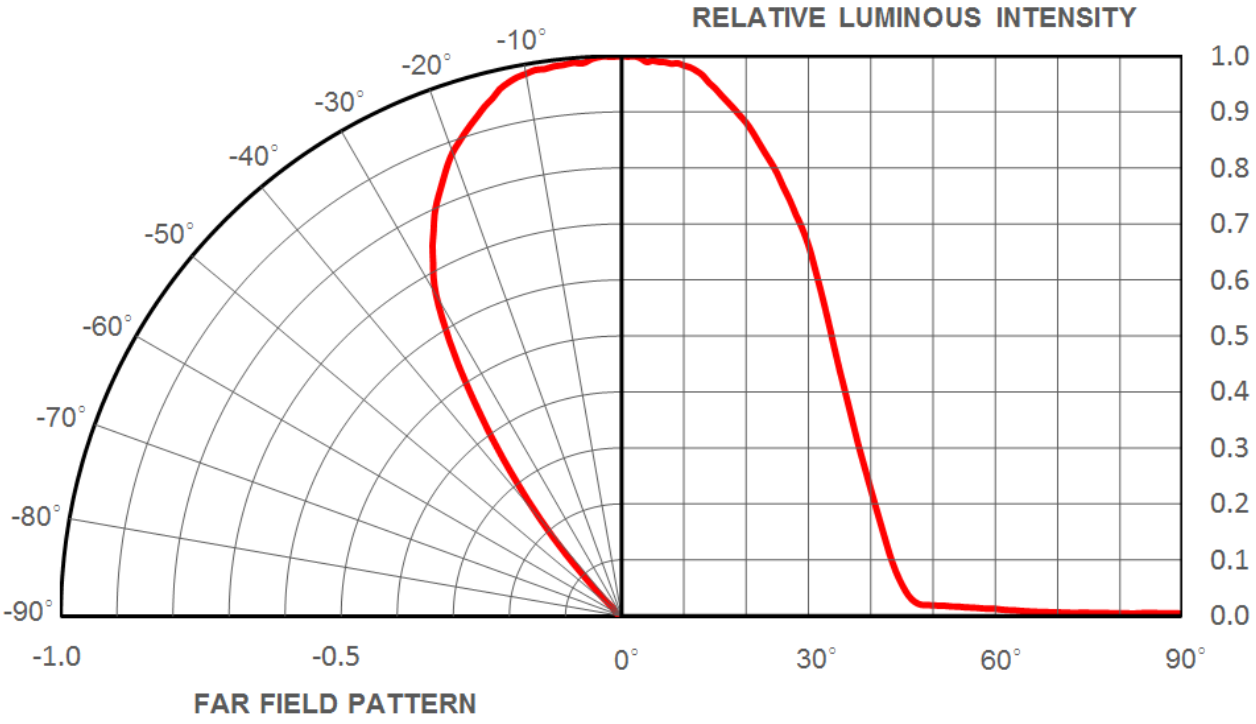

# During Storage

| Conditions | | Temperature | Humidity | Time |
|---|---|---|---|---|
| Storage | Before Opening Aluminum Bag | 5℃ ~ 30℃ | ＜ 50%RH | Within 1 Year from the Delivery Date |
| | After Opening Aluminum Bag | 5℃ ~ 30℃ | ＜ 60%RH | ≤ 672 hours |
| Baking | | 65 ± 5℃ | ＜ 10%RH | 10 ~ 24 hours |

- The standard soak time includes a default value of 24 hours for semiconductor manufature's exposure time (MET) between bake and bag and includes the maximum time allowed out of the bag at the distributor's facility.
- Table below presents the moisture sensitivity level definitions per IPC/JEDEC's J-STD-020D.

# Recommended Solder Pad Design

**Standard Emitter**

**TYPE A.**

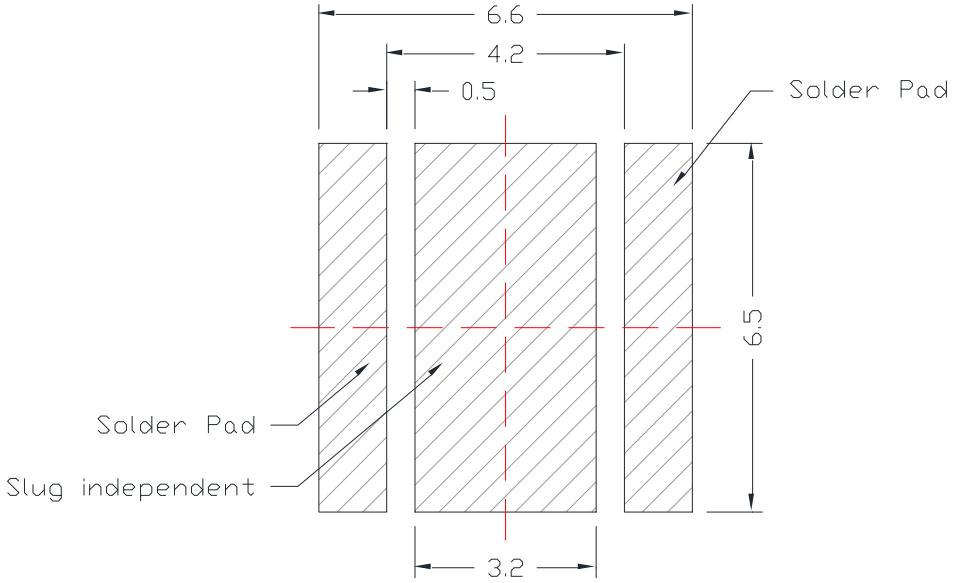


**TYPE B.**

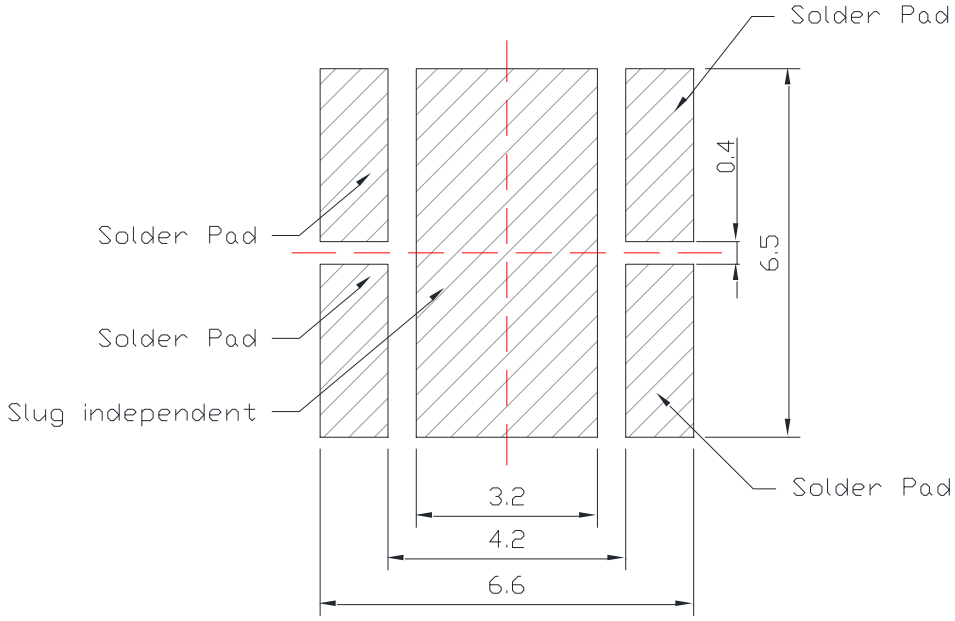


- All dimensions are in millimeters.
- Electrical isolation is required between Slug and Solder Pad.
- **The solder area must cover more than 80% of the solder pad and slug after soldering. (Voids in solder joint should be less than 20%)**

# Recommended MCPCB Design

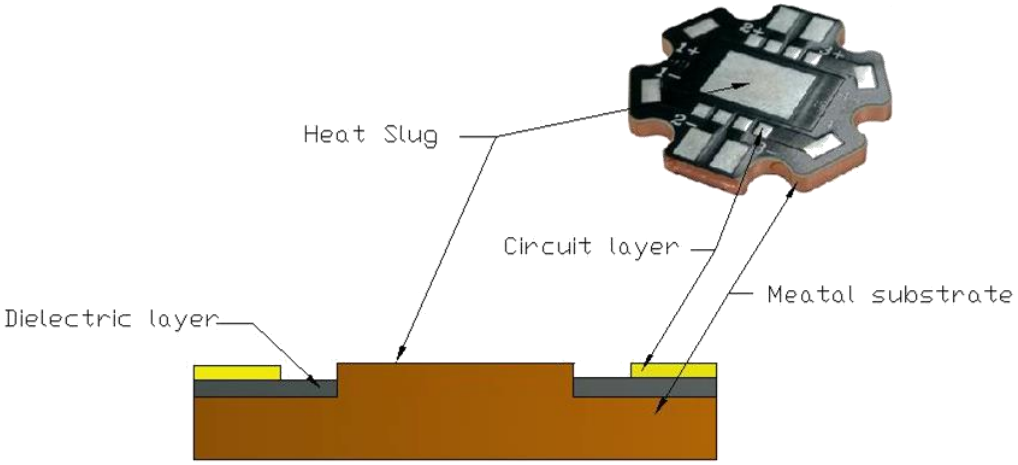


- Copper(Cu) substrate is recommended.
- The thermal conductivity of dielectric layer in the Aluminum(Al) substrate is greater or equal than 6w/mk.
- If the thermal conductivity of dielectric layer equal to 2w/mk, the power consumption should be lower than 20w.

# Reflow Soldering Condition

| Profile Feature | Sn-Pb Eutectic Assembly | Pb-Free Assembly |
|---|---|---|
| Average Ramp-Up Rate ($T_{Smax}$ to $T_P$) | 3°C / second max. | 3°C / second max. |
| Preheat<br>– Temperature Min ($T_{Smin}$)<br>– Temperature Max ($T_{Smax}$)<br>– Time ($t_{Smin}$ to $t_{Smax}$) | 100°C<br>150°C<br>60-120 seconds | 150°C<br>200°C<br>60-120 seconds |
| Time maintained above:<br>– Temperature ($T_L$)<br>– Time ($t_L$) | 183°C<br>60-150 seconds | 217°C<br>60-150 seconds |
| Peak/Classification Temperature ($T_P$) | 235°C | 250°C |
| Time Within 5°C of Actual Peak Temperature ($t_P$) | 10-20 seconds | 20-30 seconds |
| Ramp-Down Rate | 6°C/second max. | 6°C/second max. |
| Time 25°C to Peak Temperature | 6 minutes max. | 8 minutes max. |

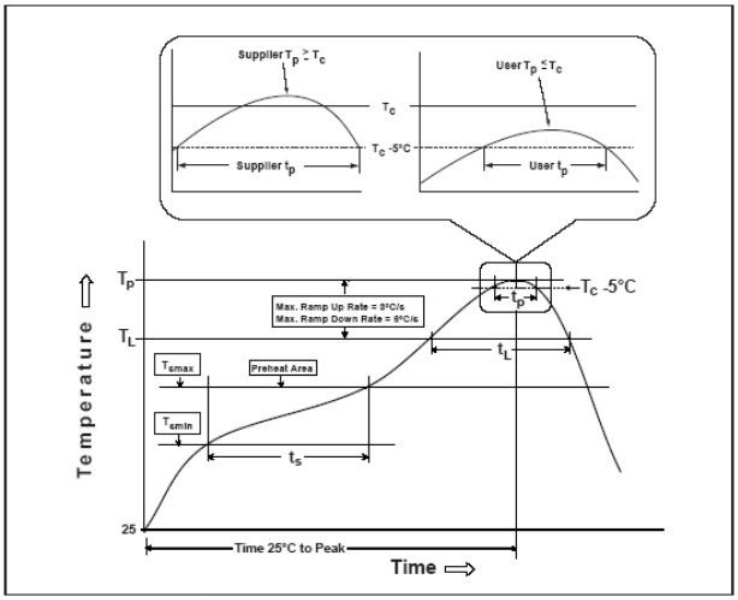


- **We recommend using the M705-S101-S4 solder paste from SMIC (Senju Metal Industry Co., Ltd.) for lead-free soldering.**
- **Do not use solder pastes with post reflow flux residue>47%. (58Bi-42Sn eutectic alloy, etc) This kind of solder pastes may cause a reliability problem to LED.**
- All temperatures refer to topside of the package, measured on the package body surface.
- Repairing should not be done after the LEDs have been soldered. When repairing is unavoidable, a double-head soldering iron should be used. It should be confirmed beforehand whether the characteristics of the LEDs will or will not be damaged by repairing.
- Reflow soldering should not be done more than three times.
- When soldering, do not put stress on the LEDs during heating.
- After soldering, do not warp the circuit board.

# Emitter Reel Packaging

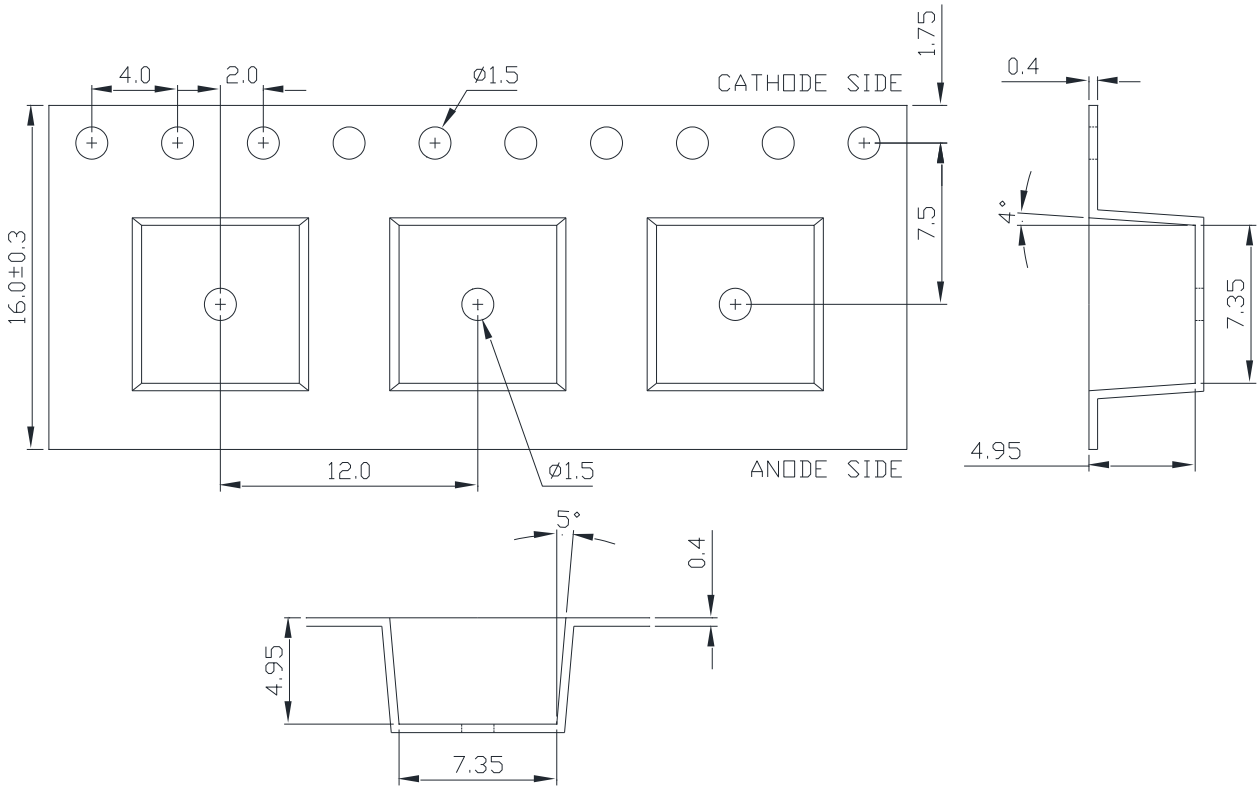


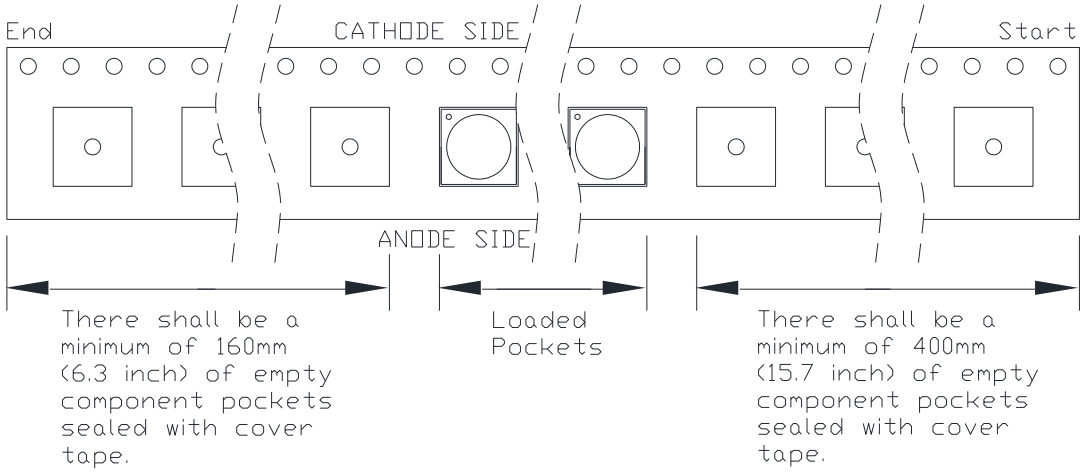


Notes:
1. Drawing not to scale.
2. All dimensions are in millimeters.
3. Unless otherwise indicated, tolerances are ± 0.1mm.

# Emitter Reel Packaging

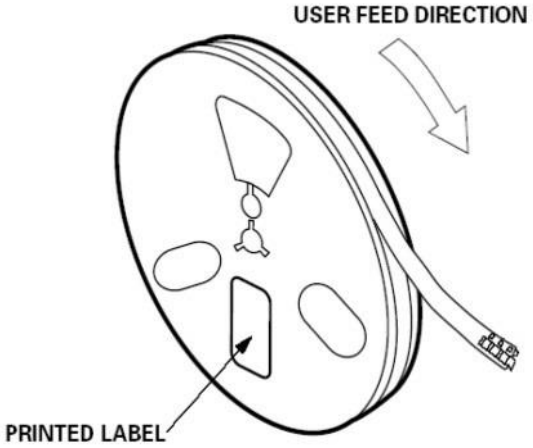


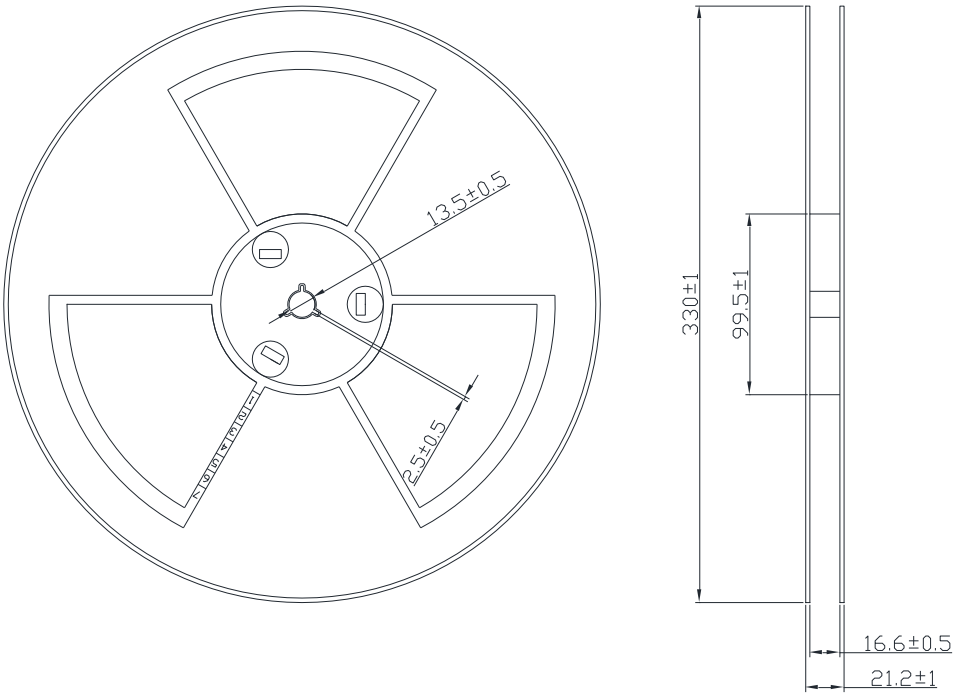


Notes:
1. Empty component pockets sealed with top cover tape.
2. 250, 500, 750 pieces per reel.
3. Drawing not to scale.
4. All dimensions are in millimeters.

# Precaution for Use

- Ensure that the product is operated and stored in a dry environment. The ambient relative humidity must be maintained at ≤ 60% RH, referring specifically to the humidity level surrounding and directly exposed to the LEDs. Any exposure to moisture levels beyond this specification may result in degradation of performance, reliability concerns, or potential functional failures. Therefore, this humidity specification is also a fundamental design requirement for the light box (or equipment) environment.
- Storage
  Please do not open the moisture barrier bag (MBB) more than one week. This may cause the leads of LED discoloration. We recommend storing ProLight's LEDs in a dry box after opening the MBB. The recommended storage conditions are temperature 5 to 30˚C and humidity less than 40% RH. It is also recommended to return the LEDs to the MBB and to reseal the MBB.
- LEDs are ESD (electrostatic discharge) sensitive; static electricity and surge voltages seriously damage UV LEDs and can result in product failure
  (1) Ensure that tools, jigs and machines being used are properly grounded
  (2) LED mounting equipment should include protection against voltage surge
  (3) Use proper ESD protection, including grounded wrist straps, ESD footwear and clothes
- We recommend using the M705-S101-S4 solder paste from SMIC (Senju Metal Industry Co., Ltd.) for lead-free soldering.
- Do not use solder pastes with post reflow flux residue>47%. (58Bi-42Sn eutectic alloy, etc) This kind of solder pastes may cause a reliability problem to LED.
- Different products have different forward voltage and radiant power. In the circuit design, the distribution of current and voltage should be considered to avoid exceeding the maximum rated parameters of this product. In order to ensure the best use, it is recommended to assign a resistor in series to each emitter in the matrix circuit.

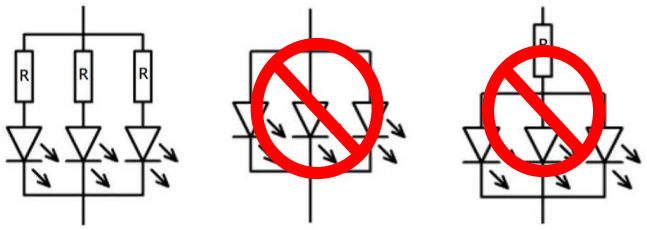


- Any mechanical force or any excess vibration shall not be accepted to apply during cooling process to normal temperature after soldering.
- Please avoid rapid cooling after soldering.
- Components should not be mounted on warped direction of PCB.
- Repairing should not be done after the LEDs have been soldered. When repairing is unavoidable, a heat plate should be used. It should be confirmed beforehand whether the characteristics of the LEDs will or will not be damaged by repairing.
- This device should not be used in any type of fluid such as water, oil, organic solvent and etc. When cleaning is required, isopropyl alcohol should be used.
- When the LEDs are illuminating, operating current should be decide after considering the package maximum temperature.
- The appearance, specifications and flux bin of the product may be modified for improvement without notice. Please refer to the below website for the latest datasheets.
  http://www.prolightopto.com/

# Recommend Drive Circuit

- Using a parallel circuit design will provide a different forward current for each LED, which means that the LED shows unexpected output performance. In the worst case, the current may exceed the absolute maximum rating that stresses the LED. In order to avoid this situation, we strongly recommend the application of current-limiting resistors in each series drive circuit.

- Reverse voltage will damage the Zener diode and LEDs.

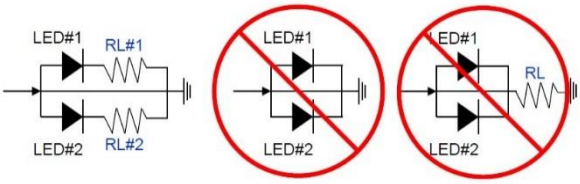


# Eye Safety Guidelines

- During operation, the LED emits high intensity ultraviolet (UV) light, which is harmful to skin and eyes. UV light is hazardous to skin and may cause cancer. Avoid exposure to UV light when LED is operational. Precautions must be taken to avoid looking directly at the UV light without the use of UV light protective glasses. Do not look directly at the front of the LED or at the LED's lens when LED is operational.

- Attach warning labels on products/systems that use UV LEDs.

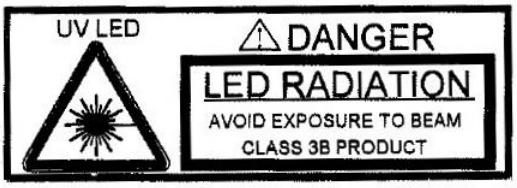

# Use Handling of Quartz Lens LEDs

Notes for handling of quartz lens LEDs

- Please do not use a force of over 3kgf impact or pressure on the quartz lens, otherwise it will cause a catastrophic failure.
- The LEDs should only be picked up by making contact with the sides of the LED body.
- Avoid touching the quartz lens especially by sharp tools such as Tweezers.
- Avoid leaving fingerprints on the quartz lens.
- Please store the LEDs away from dusty areas or seal the product against dust.
- When populating boards in SMT production, there are basically no restrictions regarding the form of the pick and place nozzle, except that mechanical pressure on the quartz lens must be prevented.
- Please do not mold over the quartz lens with another resin. (epoxy, urethane, etc)

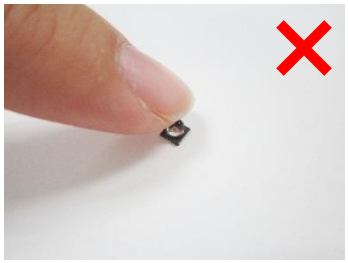

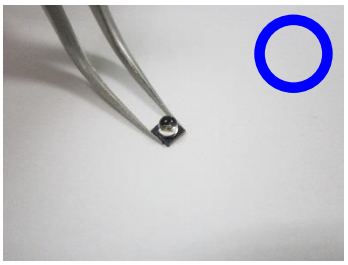

# DISCLAIMER

- The information in this document has been compiled from reference materials and other sources believed to be reliable, and given in good faith. No warranty, either expressed or implied, is made, however, to the accuracy and completeness of the information, nor is any responsibility assumed or implied for any loss or damage resulting from inaccuracies or omissions. Each user bears full responsibility for making their own determination as to the suitability of Prolight products, recommendations or advice for its own particular use. Prolight makes no warranty or guarantee, express or implied, as to results obtained in end-use, nor of any design incorporating its Products, recommendation or advice.

- Each user must identify and performall tests and analyses necessary to ensure that it’s finished application incorporating Prolight products will be safe and suitable for use under end-use conditions. Each user of devices assumes full responsibility to become educated in and to protect from harmful irradiation. Prolight specifically disclaims any and all liability for harm arising from buyer’s use or misuse of UV devices either in development or end-use.

# Disclaimers

ProLightopto Technology has made every reasonable effort to ensure the accuracy of the information in this datasheet. However, it should be understood that this information is for guidance only and does not constitute any offer or part of a contract.

ProLightopto Technology does not guarantee or accept any legal liability for the accuracy, completeness, or usefulness of any information, product, technology, or process disclosed in this datasheet.
The company reserves the right to make changes or improvements to this datasheet at its discretion.

Unless this datasheet is incorporated into a formal contract, customers should not rely on the information as a binding commitment to any specifications or product parameters by ProLightopto Technology. Customers are advised to verify that the information is current and complete before entering into any contract or acknowledging any purchase order. Therefore, all products described herein are subject to ProLightopto Technology's terms and conditions at the time of order acknowledgment.

Unless agreed upon by contractual agreement, not all parameters of each product are necessarily tested. ProLightopto Technology does not warrant or grant any license, either expressed or implied, under its patent rights or the rights of others.

Reproduction of the information contained herein is permitted only if done without any modifications or alterations. Altering this information and reproducing it is considered an unfair and deceptive business practice. ProLightopto Technology is not responsible or liable for any such altered documentation.

Reselling ProLightopto Technology's products with statements that differ from or exceed the parameters specified by ProLightopto Technology voids all express or implied warranties for the associated product or service and is considered an unfair and deceptive business practice. ProLightopto Technology is not responsible or liable for any such statements.

ProLightopto Technology's products are not authorized for use as critical components in life support devices or systems without explicit written approval from ProLightopto Technology.

For the purposes of this disclaimer：

1. Life support devices or systems are defined as those intended for surgical implant into the body or those that support or sustain life. Their failure, when used according to instructions for use provided in the labeling, can reasonably be expected to result in significant injury to the user.

2. A critical component is any component of a life support device or system whose failure can reasonably be expected to cause the failure of the device or system, or to affect its safety or effectiveness.