LM4040-N/-Q1 Precision Micropower Shunt Voltage Reference

1 Features

- LM4040-N-Q1 AEC Q-100 qualified for automotive applications
  - Extended Grade 1: −40°C to +125°C, T_A
  - Industrial Grade 3: −40°C to +85°C, T_A
- Small packages: SOT-23, TO-92, and SC70
- No output capacitor required
- Tolerates capacitive loads
- Fixed reverse breakdown voltages of 2.048V, 2.5V, 3V, 4.096V, 5V, 8.192V, and 10V
- Key specifications (2.5V LM4040-N)
  - Output voltage tolerance (A Grade, 25°C): ±0.1% (maximum)
  - Low output noise (10Hz to 10kHz): 35μV_{rms} (typical)
  - Wide operating current range: 60μA to 15mA
  - Industrial temperature range: −40°C to +85°C
  - Extended temperature range: −40°C to +125°C
  - Low temperature coefficient: 100ppm/°C (maximum)

2 Applications

- Field Transmitters
- Energy Infrastructure
- Data Acquisition
- Analog Input Module
- Automotive
- Audio and Video

3 Description

Designed for space-critical applications, the LM4040-N precision voltage reference is available in small SC70 and SOT-23 surface-mount package. The advanced design of the LM4040-N eliminates the need for an external stabilizing capacitor while maintaining stability with any capacitive load, thus making the LM4040-N easy to use. Further reducing design effort is the availability of several fixed reverse breakdown voltages: 2.048V, 2.5V, 3V, 4.096V, 5V, 8.192V, and 10V. The minimum operating current increases from 60μA for the 2.5V LM4040-N to 100μA for the 10V LM4040-N. All versions have a maximum operating current of 15mA.

The LM4040-N uses a fuse and Zener-zap reverse breakdown voltage trim during wafer sort to make sure that the prime parts have an accuracy of better than ±0.1% (A grade) at 25°C. Bandgap reference temperature drift curvature correction and low dynamic impedance provide stable reverse breakdown voltage accuracy over a wide range of operating temperatures and currents.

Also available is the LM4041-N with two reverse breakdown voltage versions: adjustable and 1.2V. See the LM4041-N data sheet (SNOS641).

Device Information

PART NUMBER	PACKAGE (1)	BODY SIZE (NOM) (2)
LM4040-N	TO-92 (3)	4.30mm × 4.30mm
	SC70 (5)	2.00mm × 1.25mm
	SOT-23 (3)	2.92mm × 1.30mm

(1) For all available packages, see the orderable addendum at the end of the data sheet.
(2) The package size (length × width) is a nominal value and includes pins, where applicable.

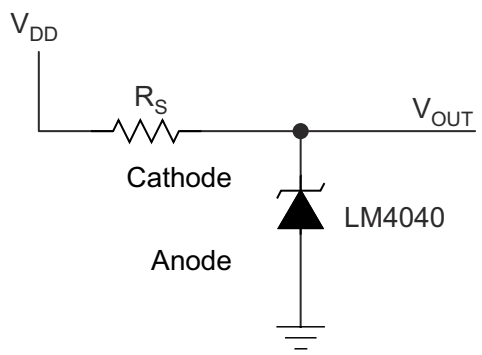

Shunt Reference Application Schematic

An IMPORTANT NOTICE at the end of this data sheet addresses availability, warranty, changes, use in safety-critical applications, intellectual property matters and other important disclaimers. PRODUCTION DATA.

sales@prom-elec.com / ООО ПРОМЭЛЕКТРОНИКА

Table of Contents

1 Features....1
2 Applications....1
3 Description....1
4 Pin Configuration and Functions....3
Pin Functions....3
5 Specifications....4
5.1 Absolute Maximum Ratings....4
5.2 ESD Ratings....4
5.3 Recommended Operating Conditions....5
5.4 Thermal Information....5
5.5 Electrical Characteristics: 2V LM4040-N V_R Tolerance Grades 'A' And 'B'; Temperature Grade 'I'....6
5.6 Electrical Characteristics: 2V LM4040-N V_R Tolerance Grades 'C', 'D', And 'E'; Temperature Grade 'I'....7
5.7 Electrical Characteristics: 2V LM4040-N V_R Tolerance Grades 'C', 'D', And 'E'; Temperature Grade 'E'....9
5.8 Electrical Characteristics: 2.5V LM4040-N V_R Tolerance Grades 'A' And 'B'; Temperature Grade 'I' (AEC Grade 3)....11
5.9 Electrical Characteristics: 2.5V LM4040-N V_R Tolerance Grades 'C', 'D', and 'E'; Temperature Grade 'I' (AEC Grade 3)....12
5.10 Electrical Characteristics: 2.5V LM4040-N V_R Tolerance Grades 'C', 'D', And 'E'; Temperature Grade 'E' (AEC Grade 1)....15
5.11 Electrical Characteristics: 3V LM4040-N V_R Tolerance Grades 'A' And 'B'; Temperature Grade 'I'....17
5.12 Electrical Characteristics: 3V LM4040-N V_R Tolerance Grades 'C', 'D', And 'E'; Temperature Grade 'I'....18
5.13 Electrical Characteristics: 3V LM4040-N V_R Tolerance Grades 'C', 'D', And 'E'; Temperature Grade 'E'....20
5.14 Electrical Characteristics: 4.1V LM4040-N V_R Tolerance Grades 'A' And 'B'; Temperature Grade 'I'....22
5.15 Electrical Characteristics: 4.1V LM4040-N V_R Tolerance Grades 'C' and 'D'; Temperature Grade 'I'....23
5.16 Electrical Characteristics: 5V LM4040-N V_R Tolerance Grades 'A' And 'B'; Temperature Grade 'I'....25
5.17 Electrical Characteristics: 5V LM4040-N V_R Tolerance Grades 'C' And 'D'; Temperature Grade 'I'....26
5.18 Electrical Characteristics: 5V LM4040-N V_R Tolerance Grades 'C' And 'D'; Temperature Grade 'E'....28
5.19 Electrical Characteristics: 8.2V LM4040-N V_R Tolerance Grades 'A' And 'B'; Temperature Grade 'I'....30
5.20 Electrical Characteristics: 8.2V Lm4040-N V_R Tolerance Grades 'C' And 'D'; Temperature Grade 'I'....31
5.21 Electrical Characteristics: 10V LM4040-N V_R Tolerance Grades 'A' And 'B'; Temperature Grade 'I'....32
5.22 Electrical Characteristics: 10V LM4040-N V_R Tolerance Grades 'C' And 'D'; Temperature Grade 'I'....33
5.23 Typical Characteristics....35
6 Parameter Measurement Information....37
7 Detailed Description....38
7.1 Overview....38
7.2 Functional Block Diagram....38
7.3 Feature Description....38
7.4 Device Functional Modes....38
8 Application and Implementation....39
8.1 Application Information....39
8.2 Typical Applications....40
8.3 Power Supply Recommendations....46
8.4 Layout....46
9 Device and Documentation Support....48
9.1 Documentation Support....48
9.2 Related Links....48
9.3 Receiving Notification of Documentation Updates....48
9.4 Support Resources....48
9.5 Trademarks....48
9.6 Electrostatic Discharge Caution....48
9.7 Glossary....48
10 Revision History....49
11 Mechanical, Packaging, And Orderable Information....50
11.1 SOT-23 and SC70 Package Marking Information....50

Copyright © 2024 Texas Instruments Incorporated

4 Pin Configuration and Functions

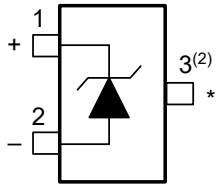

Figure 4-1. DBZ Package
3-Pin SOT-23
Top View

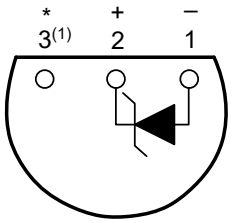

Figure 4-2. LP Package
3-Pin TO-92
Bottom View

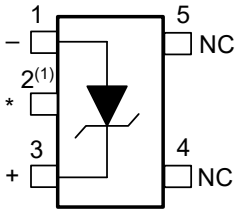

Figure 4-3. DCK Package
5-Pin SC70
Top View

Pin Functions

PIN				I/O	DESCRIPTION
NAME	SOT-23	TO-92	SC70		
Anode	2	1	1	O	Anode pin, normally grounded
Cathode	1	2	3	I/O	Shunt Current/Output Voltage
*	3(2)	3(1)	2(1)	—	Must float or connect to anode
NC	—	—	4, 5	—	No connect

(1) This pin must be left floating or connected to pin 1.
(2) This pin must be left floating or connected to pin 2.

Copyright © 2024 Texas Instruments Incorporated

5 Specifications

5.1 Absolute Maximum Ratings

over operating free-air temperature range (unless otherwise noted)[1] [2]

		MIN	MAX	UNIT
Reverse current			20	mA
Forward current			10	mA
Power dissipation (T_A = 25°C)[3]	SOT-23 (M3) package		306	mW
	TO-92 (Z) package		550	mW
	SC70 (M7) package		241	mW
Storage temperature, T_{stg}		–65	150	°C

(1) Stresses beyond those listed under *Absolute Maximum Ratings* may cause permanent damage to the device. These are stress ratings only, which do not imply functional operation of the device at these or any other conditions beyond those indicated under *Section 5.3*. Exposure to absolute-maximum-rated conditions for extended periods may affect device reliability.
(2) If Military/Aerospace specified devices are required, please contact the Texas Instruments Sales Office/ Distributors for availability and specifications.
(3) The maximum power dissipation must be derated at elevated temperatures and is dictated by T_{Jmax} (maximum junction temperature), $R_{\theta JA}$ (junction to ambient thermal resistance), and T_A (ambient temperature). The maximum allowable power dissipation at any temperature is $PD_{max} = (T_{Jmax} - T_A)/R_{\theta JA}$ or the number given in the *Absolute Maximum Ratings*, whichever is lower. For the LM4040-N, T_{Jmax} = 125°C, and the typical thermal resistance ($R_{\theta JA}$), when board mounted, is 326°C/W for the SOT-23 package, and 180°C/W with 0.4″ lead length and 170°C/W with 0.125″ lead length for the TO-92 package and 415°C/W for the SC70 Package.

5.2 ESD Ratings

			VALUE	UNIT
$V_{(ESD)}$	Electrostatic discharge	Human-body model (HBM), per ANSI/ESDA/JEDEC JS-001[1]	±2000	V
		Charged-device model (CDM), per JEDEC specification JESD22-C101[2]	±200	

(1) JEDEC document JEP155 states that 500V HBM allows safe manufacturing with a standard ESD control process.
(2) JEDEC document JEP157 states that 250V CDM allows safe manufacturing with a standard ESD control process.

Copyright © 2024 Texas Instruments Incorporated

5.3 Recommended Operating Conditions

over operating free-air temperature range (unless otherwise noted)[(1) (2)]

		MIN	MAX	UNIT
Temperature ($T_{min} \le T_A \le T_{max}$)	Industrial Temperature	–40°C ≤ T_A ≤ 85		°C
	Extended Temperature	–40 ≤ T_A ≤ 125°C		°C
Reverse Current	LM4040-N-2.0	60	15	µA to mA
	LM4040-N-2.5	60	15	µA to mA
	LM4040-N-3.0	62	15	µA to mA
	LM4040-N-4.1	68	15	µA to mA
	LM4040-N-5.0	74	15	µA to mA
	LM4040-N-8.2	91	15	µA to mA
	LM4040-N-10.0	100	15	µA to mA

(1) *Absolute Maximum Ratings* indicate limits beyond which damage to the device may occur. *Recommended Operating Conditions* indicate conditions for which the device is functional, but do not ensure specific performance limits. For ensured specifications and test conditions, see the *Electrical Characteristics*. The ensured specifications apply only for the test conditions listed. Some performance characteristics may degrade when the device is not operated under the listed test conditions.

(2) The maximum power dissipation must be derated at elevated temperatures and is dictated by T_{Jmax} (maximum junction temperature), $R_{\theta JA}$ (junction to ambient thermal resistance), and T_A (ambient temperature). The maximum allowable power dissipation at any temperature is $PD_{max} = (T_{Jmax} - T_A)/R_{\theta JA}$ or the number given in the Absolute Maximum Ratings, whichever is lower. For the LM4040-N, T_{Jmax} = 125°C, and the typical thermal resistance ($R_{\theta JA}$), when board mounted, is 326°C/W for the SOT-23 package, and 180°C/W with 0.4″ lead length and 170°C/W with 0.125″ lead length for the TO-92 package and 415°C/W for the SC70 package.

5.4 Thermal Information

THERMAL METRIC[(1)]		LM4040-N			UNIT
		DBZ (SOT-23)	LP (TO-92)	DCK (SC70)	
		3 PINS	3 PINS	5 PINS	
$R_{\theta JA}$	Junction-to-ambient thermal resistance	291.9	166	267	°C/W
$R_{\theta JC(top)}$	Junction-to-case (top) thermal resistance	114.3	88.2	95.6	°C/W
$R_{\theta JB}$	Junction-to-board thermal resistance	62.3	145.2	48.1	°C/W
ψ_{JT}	Junction-to-top characterization parameter	7.4	32.5	2.4	°C/W
ψ_{JB}	Junction-to-board characterization parameter	61	N/A	47.3	°C/W
$R_{\theta JC(bot)}$	Junction-to-case (bottom) thermal resistance	N/A	N/A	N/A	°C/W

(1) For more information about traditional and new thermal metrics, see the *Semiconductor and IC Package Thermal Metrics* application report (SPRA953).

Copyright © 2024 Texas Instruments Incorporated

5.5 Electrical Characteristics: 2V LM4040-N V_R Tolerance Grades 'A' And 'B'; Temperature Grade 'I'

all other limits $T_A = T_J = 25°C$. The grades A and B designate initial Reverse Breakdown Voltage tolerances of ±0.1% and ±0.2%, respectively.

PARAMETER		TEST CONDITIONS			MIN[1]	TYP	MAX[1]	UNIT
V_R	Reverse Breakdown Voltage	I_R = 100µA				2.048		V
	Reverse Breakdown Voltage Tolerance[2]	I_R = 100µA	LM4040AIM3 LM4040AIZ				±2	mV
			LM4040BIM3 LM4040BIZ LM4040BIM7				±4.1	
			LM4040AIM3 LM4040AIZ	$T_A = T_J = T_{MIN}$ to T_{MAX}			±15	mV
			LM4040BIM3 LM4040BIZ LM4040BIM7	$T_A = T_J = T_{MIN}$ to T_{MAX}			±17	
I_{RMIN}	Minimum Operating Current		$T_A = T_J = 25°C$			45	60	µA
			$T_A = T_J = T_{MIN}$ to T_{MAX}				65	
$\Delta V_R/\Delta T$	Average Reverse Breakdown Voltage Temperature Coefficient[2]	I_R = 10mA				±20		ppm/°C
		I_R = 1mA	$T_A = T_J = 25°C$			±15		ppm/°C
			$T_A = T_J = T_{MIN}$ to T_{MAX}				±100	
		I_R = 100µA				±15		ppm/°C
$\Delta V_R/\Delta I_R$	Reverse Breakdown Voltage Change with Operating Current Change[3]	$I_{RMIN} \le I_R \le$ 1mA	$T_A = T_J = 25°C$			0.3	0.8	mV
			$T_A = T_J = T_{MIN}$ to T_{MAX}				1	
		1mA $\le I_R \le$ 15mA	$T_A = T_J = 25°C$			2.5	6	mV
			$T_A = T_J = T_{MIN}$ to T_{MAX}				8	
Z_R	Reverse Dynamic Impedance	I_R = 1mA, f = 120Hz, I_{AC} = 0.1 I_R				0.3	0.8	Ω
e_N	Wideband Noise	I_R = 100µA 10Hz ≤ f ≤ 10kHz				35		μV_{rms}
ΔV_R	Reverse Breakdown Voltage Long Term Stability	t = 1000 hrs T = 25°C ±0.1°C I_R = 100µA				120		ppm
V_{HYST}	Thermal Hysteresis[4]	ΔT = –40°C to 125°C				0.08%		

(1) Limits are 100% production tested at 25°C. Limits over temperature are verified through correlation using Statistical Quality Control (SQC) methods. The limits are used to calculate AOQL.

(2) The overtemperature limit for Reverse Breakdown Voltage Tolerance is defined as the room temperature Reverse Breakdown Voltage Tolerance $\pm[(\Delta V_R/\Delta T)(\max\Delta T)(V_R)]$. Where, $\Delta V_R/\Delta T$ is the V_R temperature coefficient, maxΔT is the maximum difference in temperature from the reference point of 25°C to T_{MIN} or T_{MAX}, and V_R is the reverse breakdown voltage. The total overtemperature tolerance for the different grades in the industrial temperature range where maxΔT = 65°C is shown below:
A-grade: ±0.75% = ±0.1% ±100ppm/°C × 65°C
B-grade: ±0.85% = ±0.2% ±100ppm/°C × 65°C
C-grade: ±1.15% = ±0.5% ±100ppm/°C × 65°C
D-grade: ±1.98% = ±1.0% ±150ppm/°C × 65°C
E-grade: ±2.98% = ±2.0% ±150ppm/°C × 65°C
The total overtemperature tolerance for the different grades in the extended temperature range where max ΔT = 100 °C is shown below:
C-grade: ±1.5% = ±0.5% ±100ppm/°C × 100°C
D-grade: ±2.5% = ±1.0% ±150ppm/°C × 100°C
E-grade: ±3.5% = ±2.0% ±150ppm/°C × 100°C
Therefore, as an example, the A-grade 2.5V LM4040-N has an overtemperature Reverse Breakdown Voltage tolerance of ±2.5V × 0.75% = ±19 mV.

(3) Load regulation is measured on pulse basis from no load to the specified load current. Output changes due to die temperature change must be taken into account separately.

(4) Thermal hysteresis is defined as the difference in voltage measured at 25°C after cycling to temperature -40°C and the 25°C measurement after cycling to temperature 125°C.

Copyright © 2024 Texas Instruments Incorporated

5.6 Electrical Characteristics: 2V LM4040-N V_R Tolerance Grades 'C', 'D', And 'E'; Temperature Grade 'I'

all other limits $T_A = T_J = 25°C$. The grades C, D and E designate initial Reverse Breakdown Voltage tolerances of ±0.5%, ±1% and ±2%, respectively.

PARAMETER		TEST CONDITIONS			MIN[2]	TYP[1]	MAX[2]	UNIT
V_R	Reverse Breakdown Voltage	I_R = 100µA				2.048		V
	Reverse Breakdown Voltage Tolerance[3]	I_R = 100µA	LM4040CIM3 LM4040CIZ LM4040CIM7	$T_A = T_J$ = 25°C			±10	mV
				$T_A = T_J = T_{MIN}$ to T_{MAX}			±23	
			LM4040DIM3 LM4040DIZ LM4040DIM7	$T_A = T_J$ = 25°C			±20	
				$T_A = T_J = T_{MIN}$ to T_{MAX}			±40	
			LM4040EIZ LM4040EIM7	$T_A = T_J$ = 25°C			±41	
				$T_A = T_J = T_{MIN}$ to T_{MAX}			±60	
I_{RMIN}	Minimum Operating Current		LM4040CIM3 LM4040CIZ LM4040CIM7	$T_A = T_J$ = 25°C		45	60	µA
				$T_A = T_J = T_{MIN}$ to T_{MAX}			65	
			LM4040DIM3 LM4040DIZ LM4040DIM7	$T_A = T_J$ = 25°C		45	65	
				$T_A = T_J = T_{MIN}$ to T_{MAX}			70	
			LM4040EIZ LM4040EIM7	$T_A = T_J$ = 25°C		45	65	
				$T_A = T_J = T_{MIN}$ to T_{MAX}			70	
$\Delta V_R/\Delta T$	Average Reverse Breakdown Voltage Temperature Coefficient[3]	I_R = 10mA				±20		ppm/°C
		I_R = 1mA	LM4040CIM3 LM4040CIZ LM4040CIM7	$T_A = T_J$ = 25°C		±15		
				$T_A = T_J = T_{MIN}$ to T_{MAX}			±100	
			LM4040DIM3 LM4040DIZ LM4040DIM7	$T_A = T_J$ = 25°C		±15		
				$T_A = T_J = T_{MIN}$ to T_{MAX}			±150	
			LM4040EIZ LM4040EIM7	$T_A = T_J$ = 25°C		±15		
				$T_A = T_J = T_{MIN}$ to T_{MAX}			±150	
		I_R = 100µA				±15		
$\Delta V_R/\Delta I_R$	Reverse Breakdown Voltage Change with Operating Current Change[4]	$I_{RMIN} \le I_R \le$ 1mA	LM4040CIM3 LM4040CIZ LM4040CIM7	$T_A = T_J$ = 25°C		0.3	0.8	mV
				$T_A = T_J = T_{MIN}$ to T_{MAX}			1	
			LM4040DIM3 LM4040DIZ LM4040DIM7	$T_A = T_J$ = 25°C		0.3	1	
				$T_A = T_J = T_{MIN}$ to T_{MAX}			1.2	
			LM4040EIZ LM4040EIM7	$T_A = T_J$ = 25°C		0.3	1	
				$T_A = T_J = T_{MIN}$ to T_{MAX}			1.2	
		1mA $\le I_R \le$ 15mA	LM4040CIM3 LM4040CIZ LM4040CIM7	$T_A = T_J$ = 25°C		2.5	6	
				$T_A = T_J = T_{MIN}$ to T_{MAX}			8	
			LM4040DIM3 LM4040DIZ LM4040DIM7	$T_A = T_J$ = 25°C		2.5	8	
				$T_A = T_J = T_{MIN}$ to T_{MAX}			10	
			LM4040EIZ LM4040EIM7	$T_A = T_J$ = 25°C		2.5	8	
				$T_A = T_J = T_{MIN}$ to T_{MAX}			10	
Z_R	Reverse Dynamic Impedance	I_R = 1mA, f = 120Hz I_{AC} = 0.1 I_R	LM4040CIM3 LM4040CIZ LM4040CIM7			0.3	0.9	Ω
			LM4040DIM3 LM4040DIZ LM4040DIM7			0.3	1.1	
			LM4040EIZ LM4040EIM7			0.3	1.1	
e_N	Wideband Noise	I_R = 100µA 10Hz ≤ f ≤ 10kHz				35		μV_{rms}

Copyright © 2024 Texas Instruments Incorporated

5.6 Electrical Characteristics: 2V LM4040-N V_R Tolerance Grades 'C', 'D', And 'E'; Temperature Grade 'I' (continued)

all other limits $T_A = T_J = 25°C$. The grades C, D and E designate initial Reverse Breakdown Voltage tolerances of ±0.5%, ±1% and ±2%, respectively.

PARAMETER		TEST CONDITIONS		MIN(2)	TYP(1)	MAX(2)	UNIT
ΔV_R	Reverse Breakdown Voltage Long Term Stability	t = 1000 hrs T = 25°C ±0.1°C I_R = 100µA			120		ppm
V_{HYST}	Thermal Hysteresis(5)	ΔT = −40°C to 125°C			0.08%		

(1) Typicals are at T_J = 25°C and represent most likely parametric norm.
(2) Limits are 100% production tested at 25°C. Limits over temperature are verified through correlation using Statistical Quality Control (SQC) methods. The limits are used to calculate AOQL.
(3) The overtemperature limit for Reverse Breakdown Voltage Tolerance is defined as the room temperature Reverse Breakdown Voltage Tolerance ±[($\Delta V_R/\Delta T$)(maxΔT)(V_R)]. Where, $\Delta V_R/\Delta T$ is the V_R temperature coefficient, maxΔT is the maximum difference in temperature from the reference point of 25°C to T_{MIN} or T_{MAX}, and V_R is the reverse breakdown voltage. The total overtemperature tolerance for the different grades in the industrial temperature range where maxΔT = 65°C is shown below:
A-grade: ±0.75% = ±0.1% ±100ppm/°C × 65°C
B-grade: ±0.85% = ±0.2% ±100ppm/°C × 65°C
C-grade: ±1.15% = ±0.5% ±100ppm/°C × 65°C
D-grade: ±1.98% = ±1.0% ±150ppm/°C × 65°C
E-grade: ±2.98% = ±2.0% ±150ppm/°C × 65°C
The total overtemperature tolerance for the different grades in the extended temperature range where max ΔT = 100 °C is shown below:
C-grade: ±1.5% = ±0.5% ±100ppm/°C × 100°C
D-grade: ±2.5% = ±1.0% ±150ppm/°C × 100°C
E-grade: ±3.5% = ±2.0% ±150ppm/°C × 100°C
Therefore, as an example, the A-grade 2.5V LM4040-N has an overtemperature Reverse Breakdown Voltage tolerance of ±2.5V × 0.75% = ±19 mV.
(4) Load regulation is measured on pulse basis from no load to the specified load current. Output changes due to die temperature change must be taken into account separately.
(5) Thermal hysteresis is defined as the difference in voltage measured at 25°C after cycling to temperature –40°C and the 25°C measurement after cycling to temperature 125°C.

Copyright © 2024 Texas Instruments Incorporated

5.7 Electrical Characteristics: 2V LM4040-N V_R Tolerance Grades 'C', 'D', And 'E'; Temperature Grade 'E'

all other limits $T_A = T_J = 25°C$. The grades C, D and E designate initial Reverse Breakdown Voltage tolerances of ±0.5%, ±1% and ±2%, respectively.

PARAMETER		TEST CONDITIONS			MIN(2)	TYP(1)	MAX(2)	UNIT
V_R	Reverse Breakdown Voltage	I_R = 100µA				2.048		V
	Reverse Breakdown Voltage Tolerance(3)	I_R = 100µA	LM4040CEM3	$T_A = T_J$ = 25°C			±10	mV
				$T_A = T_J = T_{MIN}$ to T_{MAX}			±30	
			LM4040DEM3	$T_A = T_J$ = 25°C			±20	
				$T_A = T_J = T_{MIN}$ to T_{MAX}			±50	
			LM4040EEM3	$T_A = T_J$ = 25°C			±41	
				$T_A = T_J = T_{MIN}$ to T_{MAX}			±70	
I_{RMIN}	Minimum Operating Current		LM4040CEM3	$T_A = T_J$ = 25°C		45	60	µA
				$T_A = T_J = T_{MIN}$ to T_{MAX}			68	
			LM4040DEM3	$T_A = T_J$ = 25°C		45	65	
				$T_A = T_J = T_{MIN}$ to T_{MAX}			73	
			LM4040EEM3	$T_A = T_J$ = 25°C		45	65	
				$T_A = T_J = T_{MIN}$ to T_{MAX}			73	
$\Delta V_R/\Delta T$	Average Reverse Breakdown Voltage Temperature Coefficient(3)	I_R = 10mA				±20		ppm/°C
		I_R = 1mA	LM4040CEM3	$T_A = T_J$ = 25°C		±15		
				$T_A = T_J = T_{MIN}$ to T_{MAX}			±100	
			LM4040DEM3	$T_A = T_J$ = 25°C		±15		
				$T_A = T_J = T_{MIN}$ to T_{MAX}			±150	
			LM4040EEM3	$T_A = T_J$ = 25°C		±15		
				$T_A = T_J = T_{MIN}$ to T_{MAX}			±150	
		I_R = 100µA				±15		
$\Delta V_R/\Delta I_R$	Reverse Breakdown Voltage Change with Operating Current Change(4)	$I_{RMIN} \le I_R \le$ 1mA	LM4040CEM3	$T_A = T_J$ = 25°C		0.3	0.8	mV
				$T_A = T_J = T_{MIN}$ to T_{MAX}			1	
			LM4040DEM3	$T_A = T_J$ = 25°C		0.3	1	
				$T_A = T_J = T_{MIN}$ to T_{MAX}			1.2	
			LM4040EEM3	$T_A = T_J$ = 25°C		0.3	1	
				$T_A = T_J = T_{MIN}$ to T_{MAX}			1.2	
		1mA $\le I_R \le$ 15mA	LM4040CEM3	$T_A = T_J$ = 25°C		2.5	6	
				$T_A = T_J = T_{MIN}$ to T_{MAX}			8	
			LM4040DEM3	$T_A = T_J$ = 25°C		2.5	8	
				$T_A = T_J = T_{MIN}$ to T_{MAX}			10	
			LM4040EEM3	$T_A = T_J$ = 25°C		2.5	8	
				$T_A = T_J = T_{MIN}$ to T_{MAX}			10	
Z_R	Reverse Dynamic Impedance	I_R = 1mA, f = 120Hz, I_{AC} = 0.1 I_R	LM4040CEM3			0.3	0.9	Ω
			LM4040DEM3			0.3	1.1	
			LM4040EEM3			0.3	1.1	
e_N	Wideband Noise	I_R = 100µA 10Hz ≤ f ≤ 10kHz				35		μV_{rms}
ΔV_R	Reverse Breakdown Voltage Long Term Stability	t = 1000 hrs T = 25°C ±0.1°C I_R = 100µA				120		ppm
V_{HYST}	Thermal Hysteresis(5)	ΔT = −40°C to 125°C				0.08%		

(1) Typicals are at T_J = 25°C and represent most likely parametric norm.
(2) Limits are 100% production tested at 25°C. Limits over temperature are verified through correlation using Statistical Quality Control (SQC) methods. The limits are used to calculate AOQL.

(3) The overtemperature limit for Reverse Breakdown Voltage Tolerance is defined as the room temperature Reverse Breakdown Voltage Tolerance $\pm[(\Delta V_R/\Delta T)(\max\Delta T)(V_R)]$. Where, $\Delta V_R/\Delta T$ is the V_R temperature coefficient, $\max\Delta T$ is the maximum difference in temperature from the reference point of 25°C to T_{MIN} or T_{MAX}, and V_R is the reverse breakdown voltage. The total overtemperature tolerance for the different grades in the industrial temperature range where $\max\Delta T$ = 65°C is shown below:
A-grade: ±0.75% = ±0.1% ±100ppm/°C × 65°C
B-grade: ±0.85% = ±0.2% ±100ppm/°C × 65°C
C-grade: ±1.15% = ±0.5% ±100ppm/°C × 65°C
D-grade: ±1.98% = ±1.0% ±150ppm/°C × 65°C
E-grade: ±2.98% = ±2.0% ±150ppm/°C × 65°C
The total overtemperature tolerance for the different grades in the extended temperature range where max ΔT = 100 °C is shown below:
C-grade: ±1.5% = ±0.5% ±100ppm/°C × 100°C
D-grade: ±2.5% = ±1.0% ±150ppm/°C × 100°C
E-grade: ±3.5% = ±2.0% ±150ppm/°C × 100°C
Therefore, as an example, the A-grade 2.5V LM4040-N has an overtemperature Reverse Breakdown Voltage tolerance of ±2.5V × 0.75% = ±19 mV.

(4) Load regulation is measured on pulse basis from no load to the specified load current. Output changes due to die temperature change must be taken into account separately.

(5) Thermal hysteresis is defined as the difference in voltage measured at 25°C after cycling to temperature –40°C and the 25°C measurement after cycling to temperature 125°C.

Copyright © 2024 Texas Instruments Incorporated

5.8 Electrical Characteristics: 2.5V LM4040-N V_R Tolerance Grades 'A' And 'B'; Temperature Grade 'I' (AEC Grade 3)

all other limits $T_A = T_J = 25°C$. The grades A and B designate initial Reverse Breakdown Voltage tolerances of ±0.1% and ±0.2%, respectively.

PARAMETER		TEST CONDITIONS			MIN(2)	TYP(1)	MAX(2)	UNIT
V_R	Reverse Breakdown Voltage	I_R = 100µA				2.5		V
	Reverse Breakdown Voltage Tolerance(3)	I_R = 100µA	LM4040AIM3 LM4040AIZ LM4040AIM3	$T_A = T_J$ = 25°C			±2.5	mV
				$T_A = T_J = T_{MIN}$ to T_{MAX}			±19	
			LM4040BIM3 LM4040BIZ LM4040BIM7 LM4040QBIM3	$T_A = T_J$ = 25°C			±5	
				$T_A = T_J = T_{MIN}$ to T_{MAX}			±21	
I_{RMIN}	Minimum Operating Current		$T_A = T_J$ = 25°C			45	60	µA
			$T_A = T_J = T_{MIN}$ to T_{MAX}				65	
$\Delta V_R/\Delta T$	Average Reverse Breakdown Voltage Temperature Coefficient(3)	I_R = 10mA				±20		ppm/°C
		I_R = 1mA	$T_A = T_J$ = 25°C			±15		
			$T_A = T_J = T_{MIN}$ to T_{MAX}				±100	
		I_R = 100µA				±15		
$\Delta V_R/\Delta I_R$	Reverse Breakdown Voltage Change with Operating Current Change(4)	$I_{RMIN} \le I_R \le$ 1mA	$T_A = T_J$ = 25°C			0.3	0.8	mV
			$T_A = T_J = T_{MIN}$ to T_{MAX}				1	
		1mA $\le I_R \le$ 15mA	$T_A = T_J$ = 25°C			2.5	6	
			$T_A = T_J = T_{MIN}$ to T_{MAX}				8	
Z_R	Reverse Dynamic Impedance	I_R = 1mA, f = 120Hz, I_{AC} = 0.1 I_R				0.3	0.8	Ω
e_N	Wideband Noise	I_R = 100µA 10Hz ≤ f ≤ 10kHz				35		μV_{rms}
ΔV_R	Reverse Breakdown Voltage Long Term Stability	t = 1000 hrs T = 25°C ±0.1°C I_R = 100µA				120		ppm
V_{HYST}	Thermal Hysteresis(5)	ΔT = −40°C to 125°C				0.08%		

(1) Typicals are at T_J = 25°C and represent most likely parametric norm.
(2) Limits are 100% production tested at 25°C. Limits over temperature are verified through correlation using Statistical Quality Control (SQC) methods. The limits are used to calculate AOQL.
(3) The overtemperature limit for Reverse Breakdown Voltage Tolerance is defined as the room temperature Reverse Breakdown Voltage Tolerance $\pm[(\Delta V_R/\Delta T)(\max\Delta T)(V_R)]$. Where, $\Delta V_R/\Delta T$ is the V_R temperature coefficient, maxΔT is the maximum difference in temperature from the reference point of 25°C to T_{MIN} or T_{MAX}, and V_R is the reverse breakdown voltage. The total overtemperature tolerance for the different grades in the industrial temperature range where maxΔT = 65°C is shown below:
A-grade: ±0.75% = ±0.1% ±100ppm/°C × 65°C
B-grade: ±0.85% = ±0.2% ±100ppm/°C × 65°C
C-grade: ±1.15% = ±0.5% ±100ppm/°C × 65°C
D-grade: ±1.98% = ±1.0% ±150ppm/°C × 65°C
E-grade: ±2.98% = ±2.0% ±150ppm/°C × 65°C
The total overtemperature tolerance for the different grades in the extended temperature range where max ΔT = 100 °C is shown below:
C-grade: ±1.5% = ±0.5% ±100ppm/°C × 100°C
D-grade: ±2.5% = ±1.0% ±150ppm/°C × 100°C
E-grade: ±3.5% = ±2.0% ±150ppm/°C × 100°C
Therefore, as an example, the A-grade 2.5V LM4040-N has an overtemperature Reverse Breakdown Voltage tolerance of ±2.5V × 0.75% = ±19 mV.
(4) Load regulation is measured on pulse basis from no load to the specified load current. Output changes due to die temperature change must be taken into account separately.
(5) Thermal hysteresis is defined as the difference in voltage measured at 25°C after cycling to temperature –40°C and the 25°C measurement after cycling to temperature 125°C.

5.9 Electrical Characteristics: 2.5V LM4040-N V_R Tolerance Grades 'C', 'D', and 'E'; Temperature Grade 'I' (AEC Grade 3)

all other limits $T_A = T_J = 25°C$. The grades C, D and E designate initial Reverse Breakdown Voltage tolerances of ±0.5%, ±1% and ±2%, respectively.

PARAMETER		TEST CONDITIONS			MIN[2]	TYP[1]	MAX[2]	UNIT
V_R	Reverse Breakdown Voltage	I_R = 100µA				2.5		V
	Reverse Breakdown Voltage Tolerance[3]	I_R = 100µA	LM4040CIZ LM4040CIM3 LM4040CIM7 LM4040QCIM3	$T_A = T_J$ = 25°C			±12	mV
				$T_A = T_J = T_{MIN}$ to T_{MAX}			±29	
			LM4040DIZ LM4040DIM3 LM4040DIM7 LM4040QDIM3	$T_A = T_J$ = 25°C			±25	
				$T_A = T_J = T_{MIN}$ to T_{MAX}			±49	
			LM4040EIZ LM4040EIM3 LM4040EIM7 LM4040QEIM3	$T_A = T_J$ = 25°C			±50	
				$T_A = T_J = T_{MIN}$ to T_{MAX}			±74	
I_{RMIN}	Minimum Operating Current		LM4040CIZ LM4040CIM3 LM4040CIM7 LM4040QCIM3	$T_A = T_J$ = 25°C		45	60	µA
				$T_A = T_J = T_{MIN}$ to T_{MAX}			65	
			LM4040DIZ LM4040DIM3 LM4040DIM7 LM4040QDIM3	$T_A = T_J$ = 25°C		45	65	
				$T_A = T_J = T_{MIN}$ to T_{MAX}			70	
			LM4040EIZ LM4040EIM3 LM4040EIM7 LM4040QEIM3	$T_A = T_J$ = 25°C		45	65	
				$T_A = T_J = T_{MIN}$ to T_{MAX}			70	
$\Delta V_R/\Delta T$	Average Reverse Breakdown Voltage Temperature Coefficient[3]	I_R = 10mA				±20		ppm/°C
		I_R = 1mA	LM4040CIZ LM4040CIM3 LM4040CIM7 LM4040QCIM3	$T_A = T_J$ = 25°C		±15		
				$T_A = T_J = T_{MIN}$ to T_{MAX}			±100	
			LM4040DIZ LM4040DIM3 LM4040DIM7 LM4040QDIM3	$T_A = T_J$ = 25°C		±15		
				$T_A = T_J = T_{MIN}$ to T_{MAX}			±150	
			LM4040EIZ LM4040EIM3 LM4040EIM7 LM4040QEIM3	$T_A = T_J$ = 25°C		±15		
				$T_A = T_J = T_{MIN}$ to T_{MAX}			±150	
		I_R = 100µA				±15		

Copyright © 2024 Texas Instruments Incorporated

5.9 Electrical Characteristics: 2.5V LM4040-N V_R Tolerance Grades 'C', 'D', and 'E'; Temperature Grade 'I' (AEC Grade 3) (continued)

all other limits $T_A = T_J = 25°C$. The grades C, D and E designate initial Reverse Breakdown Voltage tolerances of ±0.5%, ±1% and ±2%, respectively.

PARAMETER		TEST CONDITIONS			MIN[2]	TYP[1]	MAX[2]	UNIT
$\Delta V_R/\Delta I_R$	Reverse Breakdown Voltage Change with Operating Current Change[4]	$I_{RMIN} \le I_R \le 1mA$	LM4040CIZ LM4040CIM3 LM4040CIM7 LM4040QCIM3	$T_A = T_J = 25°C$		0.3	0.8	mV
				$T_A = T_J = T_{MIN}$ to T_{MAX}			1	
			LM4040DIZ LM4040DIM3 LM4040DIM7 LM4040QDIM3	$T_A = T_J = 25°C$		0.3	1	
				$T_A = T_J = T_{MIN}$ to T_{MAX}			1.2	
			LM4040EIZ LM4040EIM3 LM4040EIM7 LM4040QEIM3	$T_A = T_J = 25°C$		0.3	1	
				$T_A = T_J = T_{MIN}$ to T_{MAX}			1.2	
		$1mA \le I_R \le 15mA$	LM4040CIZ LM4040CIM3 LM4040CIM7 LM4040QCIM3	$T_A = T_J = 25°C$		2.5	6	
				$T_A = T_J = T_{MIN}$ to T_{MAX}			8	
			LM4040DIZ LM4040DIM3 LM4040DIM7 LM4040QDIM3	$T_A = T_J = 25°C$		2.5	8	
				$T_A = T_J = T_{MIN}$ to T_{MAX}			10	
			LM4040EIZ LM4040EIM3 LM4040EIM7 LM4040QEIM3	$T_A = T_J = 25°C$		2.5	8	
				$T_A = T_J = T_{MIN}$ to T_{MAX}			10	
Z_R	Reverse Dynamic Impedance	I_R = 1mA, f = 120Hz $I_{AC} = 0.1\ I_R$	LM4040CIZ LM4040CIM3 LM4040CIM7 LM4040QCIM3			0.3	0.9	Ω
			LM4040DIZ LM4040DIM3 LM4040DIM7 LM4040QDIM3			0.3	1.1	
			LM4040EIZ LM4040EIM3 LM4040EIM7 LM4040QEIM3			0.3	1.1	
e_N	Wideband Noise	I_R = 100µA 10Hz ≤ f ≤ 10kHz				35		μV_{rms}
ΔV_R	Reverse Breakdown Voltage Long Term Stability	t = 1000 hrs T = 25°C ±0.1°C I_R = 100µA				120		ppm
V_{HYST}	Thermal Hysteresis[5]	ΔT= −40°C to 125°C				0.08%		

(1) Typicals are at $T_J = 25°C$ and represent most likely parametric norm.
(2) Limits are 100% production tested at 25°C. Limits over temperature are verified through correlation using Statistical Quality Control (SQC) methods. The limits are used to calculate AOQL.
(3) The overtemperature limit for Reverse Breakdown Voltage Tolerance is defined as the room temperature Reverse Breakdown Voltage Tolerance $\pm[(\Delta V_R/\Delta T)(\max\Delta T)(V_R)]$. Where, $\Delta V_R/\Delta T$ is the V_R temperature coefficient, maxΔT is the maximum difference in temperature from the reference point of 25°C to T_{MIN} or T_{MAX}, and V_R is the reverse breakdown voltage. The total overtemperature tolerance for the different grades in the industrial temperature range where maxΔT = 65°C is shown below:
A-grade: ±0.75% = ±0.1% ±100ppm/°C × 65°C
B-grade: ±0.85% = ±0.2% ±100ppm/°C × 65°C
C-grade: ±1.15% = ±0.5% ±100ppm/°C × 65°C
D-grade: ±1.98% = ±1.0% ±150ppm/°C × 65°C
E-grade: ±2.98% = ±2.0% ±150ppm/°C × 65°C
The total overtemperature tolerance for the different grades in the extended temperature range where max ΔT = 100 °C is shown below:
C-grade: ±1.5% = ±0.5% ±100ppm/°C × 100°C
D-grade: ±2.5% = ±1.0% ±150ppm/°C × 100°C
E-grade: ±3.5% = ±2.0% ±150ppm/°C × 100°C
Therefore, as an example, the A-grade 2.5V LM4040-N has an overtemperature Reverse Breakdown Voltage tolerance of ±2.5V × 0.75% = ±19 mV.

Copyright © 2024 Texas Instruments Incorporated

(4) Load regulation is measured on pulse basis from no load to the specified load current. Output changes due to die temperature change must be taken into account separately.
(5) Thermal hysteresis is defined as the difference in voltage measured at 25°C after cycling to temperature –40°C and the 25°C measurement after cycling to temperature 125°C.

Copyright © 2024 Texas Instruments Incorporated

5.10 Electrical Characteristics: 2.5V LM4040-N V_R Tolerance Grades 'C', 'D', And 'E'; Temperature Grade 'E' (AEC Grade 1)

all other limits $T_A = T_J = 25°C$. The grades C, D and E designate initial Reverse Breakdown Voltage tolerances of ±0.5%, ±1% and ±2%, respectively.

PARAMETER		TEST CONDITIONS			MIN[2]	TYP[1]	MAX[2]	UNIT
V_R	Reverse Breakdown Voltage	I_R = 100µA				2.5		V
	Reverse Breakdown Voltage Tolerance[3]	I_R = 100µA	LM4040CEM3 LM4040QCEM3	$T_A = T_J$ = 25°C			±12	mV
				$T_A = T_J = T_{MIN}$ to T_{MAX}			±38	
			LM4040DEM3 LM4040QDEM3	$T_A = T_J$ = 25°C			±25	
				$T_A = T_J = T_{MIN}$ to T_{MAX}			±63	
			LM4040EEM3 LM4040QEEM3	$T_A = T_J$ = 25°C			±50	
				$T_A = T_J = T_{MIN}$ to T_{MAX}			±88	
I_{RMIN}	Minimum Operating Current		LM4040CEM3 LM4040QCEM3	$T_A = T_J$ = 25°C		45	60	µA
				$T_A = T_J = T_{MIN}$ to T_{MAX}			68	
			LM4040DEM3 LM4040QDEM3	$T_A = T_J$ = 25°C		45	65	
				$T_A = T_J = T_{MIN}$ to T_{MAX}			73	
			LM4040EEM3 LM4040QEEM3	$T_A = T_J$ = 25°C		45	65	
				$T_A = T_J = T_{MIN}$ to T_{MAX}			73	
$\Delta V_R/\Delta T$	Average Reverse Breakdown Voltage Temperature Coefficient[3]	I_R = 10mA				±20		ppm/°C
		I_R = 1mA	LM4040CEM3 LM4040QCEM3	$T_A = T_J$ = 25°C		±15		
				$T_A = T_J = T_{MIN}$ to T_{MAX}			±100	
			LM4040DEM3 LM4040QDEM3	$T_A = T_J$ = 25°C		±15		
				$T_A = T_J = T_{MIN}$ to T_{MAX}			±150	
			LM4040EEM3 LM4040QEEM3	$T_A = T_J$ = 25°C		±15		
				$T_A = T_J = T_{MIN}$ to T_{MAX}			±150	
		I_R = 100µA				±15		
$\Delta V_R/\Delta I_R$	Reverse Breakdown Voltage Change with Operating Current Change[4]	$I_{RMIN} \le I_R \le$ 1mA	LM4040CEM3 LM4040QCEM3	$T_A = T_J$ = 25°C		0.3	0.8	mV
				$T_A = T_J = T_{MIN}$ to T_{MAX}			1	
			LM4040DEM3 LM4040QDEM3	$T_A = T_J$ = 25°C		0.3	1	
				$T_A = T_J = T_{MIN}$ to T_{MAX}			1.2	
			LM4040EEM3 LM4040QEEM3	$T_A = T_J$ = 25°C		0.3	1	
				$T_A = T_J = T_{MIN}$ to T_{MAX}			1.2	
		1mA $\le I_R \le$ 15mA	LM4040CEM3 LM4040QCEM3	$T_A = T_J$ = 25°C		2.5	6	
				$T_A = T_J = T_{MIN}$ to T_{MAX}			8	
			LM4040DEM3 LM4040QDEM3	$T_A = T_J$ = 25°C		2.5	8	
				$T_A = T_J = T_{MIN}$ to T_{MAX}			10	
			LM4040EEM3 LM4040QEEM3	$T_A = T_J$ = 25°C		2.5	8	
				$T_A = T_J = T_{MIN}$ to T_{MAX}			10	
Z_R	Reverse Dynamic Impedance	I_R = 1mA, f = 120Hz, I_{AC} = 0.1 I_R	LM4040CEM3 LM4040QCEM3			0.3	0.9	Ω
			LM4040DEM3 LM4040QDEM3			0.3	1.1	
			LM4040EEM3 LM4040QEEM3			0.3	1.1	
e_N	Wideband Noise	I_R = 100µA 10Hz ≤ f ≤ 10kHz				35		μV_{rms}
ΔV_R	Reverse Breakdown Voltage Long Term Stability	t = 1000 hrs T = 25°C ±0.1°C I_R = 100µA				120		ppm
V_{HYST}	Thermal Hysteresis[5]	ΔT= −40°C to 125°C				0.08%		

(1) Typicals are at T_J = 25°C and represent most likely parametric norm.

(2) Limits are 100% production tested at 25°C. Limits over temperature are verified through correlation using Statistical Quality Control (SQC) methods. The limits are used to calculate AOQL.

(3) The overtemperature limit for Reverse Breakdown Voltage Tolerance is defined as the room temperature Reverse Breakdown Voltage Tolerance ±[($\Delta V_R/\Delta T$)(maxΔT)(V_R)]. Where, $\Delta V_R/\Delta T$ is the V_R temperature coefficient, maxΔT is the maximum difference in temperature from the reference point of 25°C to T_{MIN} or T_{MAX}, and V_R is the reverse breakdown voltage. The total overtemperature tolerance for the different grades in the industrial temperature range where maxΔT = 65°C is shown below:
A-grade: ±0.75% = ±0.1% ±100ppm/°C × 65°C
B-grade: ±0.85% = ±0.2% ±100ppm/°C × 65°C
C-grade: ±1.15% = ±0.5% ±100ppm/°C × 65°C
D-grade: ±1.98% = ±1.0% ±150ppm/°C × 65°C
E-grade: ±2.98% = ±2.0% ±150ppm/°C × 65°C
The total overtemperature tolerance for the different grades in the extended temperature range where max ΔT = 100 °C is shown below:
C-grade: ±1.5% = ±0.5% ±100ppm/°C × 100°C
D-grade: ±2.5% = ±1.0% ±150ppm/°C × 100°C
E-grade: ±3.5% = ±2.0% ±150ppm/°C × 100°C
Therefore, as an example, the A-grade 2.5V LM4040-N has an overtemperature Reverse Breakdown Voltage tolerance of ±2.5V × 0.75% = ±19 mV.

(4) Load regulation is measured on pulse basis from no load to the specified load current. Output changes due to die temperature change must be taken into account separately.

(5) Thermal hysteresis is defined as the difference in voltage measured at +25°C after cycling to temperature -40°C and the 25°C measurement after cycling to temperature 125°C.

Copyright © 2024 Texas Instruments Incorporated

5.11 Electrical Characteristics: 3V LM4040-N V_R Tolerance Grades 'A' And 'B'; Temperature Grade 'I'

all other limits $T_A = T_J = 25°C$. The grades A and B designate initial Reverse Breakdown Voltage tolerances of ±0.1% and ±0.2%, respectively.

PARAMETER		TEST CONDITIONS			MIN(2)	TYP(1)	MAX(2)	UNIT
V_R	Reverse Breakdown Voltage	I_R = 100µA				3		V
	Reverse Breakdown Voltage Tolerance(3)	I_R = 100µA	LM4040AIM3 LM4040AIZ	$T_A = T_J$ = 25°C			±3	mV
				$T_A = T_J = T_{MIN}$ to T_{MAX}			±22	
			LM4040BIM3 LM4040BIZ LM4040BIM7	$T_A = T_J$ = 25°C			±6	
				$T_A = T_J = T_{MIN}$ to T_{MAX}			±26	
I_{RMIN}	Minimum Operating Current		$T_A = T_J$ = 25°C			47	62	µA
			$T_A = T_J = T_{MIN}$ to T_{MAX}				67	
$\Delta V_R/\Delta T$	Average Reverse Breakdown Voltage Temperature Coefficient(3)	I_R = 10mA				±20		ppm/°C
		I_R = 1mA	$T_A = T_J$ = 25°C			±15		
			$T_A = T_J = T_{MIN}$ to T_{MAX}				±100	
		I_R = 100µA				±15		
$\Delta V_R/\Delta I_R$	Reverse Breakdown Voltage Change with Operating Current Change(4)	$I_{RMIN} \le I_R \le$ 1mA	$T_A = T_J$ = 25°C			0.6	0.8	mV
			$T_A = T_J = T_{MIN}$ to T_{MAX}				1.1	
		1mA $\le I_R \le$ 15mA	$T_A = T_J$ = 25°C			2.7	6	
			$T_A = T_J = T_{MIN}$ to T_{MAX}				9	
Z_R	Reverse Dynamic Impedance	I_R = 1mA, f = 120Hz, I_{AC} = 0.1 I_R				0.4	0.9	Ω
e_N	Wideband Noise	I_R = 100µA 10Hz ≤ f ≤ 10kHz				35		μV_{rms}
ΔV_R	Reverse Breakdown Voltage Long Term Stability	t = 1000 hrs T = 25°C ±0.1°C I_R = 100µA				120		ppm
V_{HYST}	Thermal Hysteresis(5)	ΔT = −40°C to 125°C				0.08%		

(1) Typicals are at T_J = 25°C and represent most likely parametric norm.
(2) Limits are 100% production tested at 25°C. Limits over temperature are verified through correlation using Statistical Quality Control (SQC) methods. The limits are used to calculate AOQL.
(3) The overtemperature limit for Reverse Breakdown Voltage Tolerance is defined as the room temperature Reverse Breakdown Voltage Tolerance $\pm[(\Delta V_R/\Delta T)(\max\Delta T)(V_R)]$. Where, $\Delta V_R/\Delta T$ is the V_R temperature coefficient, maxΔT is the maximum difference in temperature from the reference point of 25°C to T_{MIN} or T_{MAX}, and V_R is the reverse breakdown voltage. The total overtemperature tolerance for the different grades in the industrial temperature range where maxΔT = 65°C is shown below:
A-grade: ±0.75% = ±0.1% ±100ppm/°C × 65°C
B-grade: ±0.85% = ±0.2% ±100ppm/°C × 65°C
C-grade: ±1.15% = ±0.5% ±100ppm/°C × 65°C
D-grade: ±1.98% = ±1.0% ±150ppm/°C × 65°C
E-grade: ±2.98% = ±2.0% ±150ppm/°C × 65°C
The total overtemperature tolerance for the different grades in the extended temperature range where max ΔT = 100 °C is shown below:
C-grade: ±1.5% = ±0.5% ±100ppm/°C × 100°C
D-grade: ±2.5% = ±1.0% ±150ppm/°C × 100°C
E-grade: ±3.5% = ±2.0% ±150ppm/°C × 100°C
Therefore, as an example, the A-grade 2.5V LM4040-N has an overtemperature Reverse Breakdown Voltage tolerance of ±2.5V × 0.75% = ±19 mV.
(4) Load regulation is measured on pulse basis from no load to the specified load current. Output changes due to die temperature change must be taken into account separately.
(5) Thermal hysteresis is defined as the difference in voltage measured at +25°C after cycling to temperature -40°C and the 25°C measurement after cycling to temperature 125°C.

5.12 Electrical Characteristics: 3V LM4040-N V_R Tolerance Grades 'C', 'D', And 'E'; Temperature Grade 'I'

all other limits $T_A = T_J = 25°C$. The grades C, D and E designate initial Reverse Breakdown Voltage tolerances of ±0.5%, ±1% and ±2%, respectively.

PARAMETER		TEST CONDITIONS			MIN[2]	TYP[1]	MAX[2]	UNIT
V_R	Reverse Breakdown Voltage	I_R = 100µA				3		V
	Reverse Breakdown Voltage Tolerance[3]	I_R = 100µA	LM4040CIM3 LM4040CIZ LM4040CIM7	$T_A = T_J$ = 25°C			±15	mV
				$T_A = T_J = T_{MIN}$ to T_{MAX}			±34	
			LM4040DIM3 LM4040DIZ LM4040DIM7	$T_A = T_J$ = 25°C			±30	
				$T_A = T_J = T_{MIN}$ to T_{MAX}			±59	
			LM4040EIM7 LM4040EIZ	$T_A = T_J$ = 25°C			±60	
				$T_A = T_J = T_{MIN}$ to T_{MAX}			±89	
I_{RMIN}	Minimum Operating Current		LM4040CIM3 LM4040CIZ LM4040CIM7	$T_A = T_J$ = 25°C		45	60	µA
				$T_A = T_J = T_{MIN}$ to T_{MAX}			65	
			LM4040DIM3 LM4040DIZ LM4040DIM7	$T_A = T_J$ = 25°C		45	65	
				$T_A = T_J = T_{MIN}$ to T_{MAX}			70	
			LM4040EIM7 LM4040EIZ	$T_A = T_J$ = 25°C		45	65	
				$T_A = T_J = T_{MIN}$ to T_{MAX}			70	
$\Delta V_R/\Delta T$	Average Reverse Breakdown Voltage Temperature Coefficient[3]	I_R = 10mA				±20		ppm/°C
		I_R = 1mA	LM4040CIM3 LM4040CIZ LM4040CIM7	$T_A = T_J$ = 25°C		±15		
				$T_A = T_J = T_{MIN}$ to T_{MAX}			±100	
			LM4040DIM3 LM4040DIZ LM4040DIM7	$T_A = T_J$ = 25°C		±15		
				$T_A = T_J = T_{MIN}$ to T_{MAX}			±150	
			LM4040EIM7 LM4040EIZ	$T_A = T_J$ = 25°C		±15		
				$T_A = T_J = T_{MIN}$ to T_{MAX}			±150	
		I_R = 100µA				±15		
$\Delta V_R/\Delta I_R$	Reverse Breakdown Voltage Change with Operating Current Change[4]	$I_{RMIN} \le I_R \le$ 1mA	LM4040CIM3 LM4040CIZ LM4040CIM7	$T_A = T_J$ = 25°C		0.4	0.8	mV
				$T_A = T_J = T_{MIN}$ to T_{MAX}			1.1	
			LM4040DIM3 LM4040DIZ LM4040DIM7	$T_A = T_J$ = 25°C		0.4	1.1	
				$T_A = T_J = T_{MIN}$ to T_{MAX}			1.3	
			LM4040EIM7 LM4040EIZ	$T_A = T_J$ = 25°C		0.4	1.1	
				$T_A = T_J = T_{MIN}$ to T_{MAX}			1.3	
		1mA $\le I_R \le$ 15mA	LM4040CIM3 LM4040CIZ LM4040CIM7	$T_A = T_J$ = 25°C		2.7	6	
				$T_A = T_J = T_{MIN}$ to T_{MAX}			9	
			LM4040DIM3 LM4040DIZ LM4040DIM7	$T_A = T_J$ = 25°C		2.7	8	
				$T_A = T_J = T_{MIN}$ to T_{MAX}			11	
			LM4040EIM7 LM4040EIZ	$T_A = T_J$ = 25°C		2.7	8	
				$T_A = T_J = T_{MIN}$ to T_{MAX}			11	
Z_R	Reverse Dynamic Impedance	I_R = 1mA, f = 120Hz I_{AC} = 0.1 I_R	LM4040CIM3 LM4040CIZ LM4040CIM7			0.4	0.9	Ω
			LM4040DIM3 LM4040DIZ LM4040DIM7			0.4	1.2	
			LM4040EIM7 LM4040EIZ			0.4	1.2	
e_N	Wideband Noise	I_R = 100µA 10Hz ≤ f ≤ 10kHz				35		μV_{rms}

Copyright © 2024 Texas Instruments Incorporated

5.12 Electrical Characteristics: 3V LM4040-N V_R Tolerance Grades 'C', 'D', And 'E'; Temperature Grade 'I' (continued)

all other limits $T_A = T_J = 25°C$. The grades C, D and E designate initial Reverse Breakdown Voltage tolerances of ±0.5%, ±1% and ±2%, respectively.

PARAMETER		TEST CONDITIONS		MIN(2)	TYP(1)	MAX(2)	UNIT
ΔV_R	Reverse Breakdown Voltage Long Term Stability	t = 1000 hrs T = 25°C ±0.1°C I_R = 100µA			120		ppm
V_{HYST}	Thermal Hysteresis(5)	ΔT = −40°C to 125°C			0.08%		

(1) Typicals are at T_J = 25°C and represent most likely parametric norm.
(2) Limits are 100% production tested at 25°C. Limits over temperature are verified through correlation using Statistical Quality Control (SQC) methods. The limits are used to calculate AOQL.
(3) The overtemperature limit for Reverse Breakdown Voltage Tolerance is defined as the room temperature Reverse Breakdown Voltage Tolerance ±[($\Delta V_R/\Delta T$)(maxΔT)(V_R)]. Where, $\Delta V_R/\Delta T$ is the V_R temperature coefficient, maxΔT is the maximum difference in temperature from the reference point of 25°C to T_{MIN} or T_{MAX}, and V_R is the reverse breakdown voltage. The total overtemperature tolerance for the different grades in the industrial temperature range where maxΔT = 65°C is shown below:
A-grade: ±0.75% = ±0.1% ±100ppm/°C × 65°C
B-grade: ±0.85% = ±0.2% ±100ppm/°C × 65°C
C-grade: ±1.15% = ±0.5% ±100ppm/°C × 65°C
D-grade: ±1.98% = ±1.0% ±150ppm/°C × 65°C
E-grade: ±2.98% = ±2.0% ±150ppm/°C × 65°C
The total overtemperature tolerance for the different grades in the extended temperature range where max ΔT = 100 °C is shown below:
C-grade: ±1.5% = ±0.5% ±100ppm/°C × 100°C
D-grade: ±2.5% = ±1.0% ±150ppm/°C × 100°C
E-grade: ±3.5% = ±2.0% ±150ppm/°C × 100°C
Therefore, as an example, the A-grade 2.5V LM4040-N has an overtemperature Reverse Breakdown Voltage tolerance of ±2.5V × 0.75% = ±19 mV.
(4) Load regulation is measured on pulse basis from no load to the specified load current. Output changes due to die temperature change must be taken into account separately.
(5) Thermal hysteresis is defined as the difference in voltage measured at +25°C after cycling to temperature -40°C and the 25°C measurement after cycling to temperature 125°C.

5.13 Electrical Characteristics: 3V LM4040-N V_R Tolerance Grades 'C', 'D', And 'E'; Temperature Grade 'E'

all other limits $T_A = T_J = 25°C$. The grades C, D and E designate initial Reverse Breakdown Voltage tolerances of ±0.5%, ±1% and ±2%, respectively.

PARAMETER		TEST CONDITIONS			MIN[2]	TYP[1]	MAX[2]	UNIT
V_R	Reverse Breakdown Voltage	I_R = 100µA				3		V
	Reverse Breakdown Voltage Tolerance[3]	I_R = 100µA	LM4040CEM3	$T_A = T_J$ = 25°C			±15	mV
				$T_A = T_J = T_{MIN}$ to T_{MAX}			±45	
			LM4040DEM3	$T_A = T_J$ = 25°C			±30	
				$T_A = T_J = T_{MIN}$ to T_{MAX}			±75	
			LM4040EEM3	$T_A = T_J$ = 25°C			±60	
				$T_A = T_J = T_{MIN}$ to T_{MAX}			±105	
I_{RMIN}	Minimum Operating Current		LM4040CEM3	$T_A = T_J$ = 25°C		47	62	µA
				$T_A = T_J = T_{MIN}$ to T_{MAX}			70	
			LM4040DEM3	$T_A = T_J$ = 25°C		47	67	
				$T_A = T_J = T_{MIN}$ to T_{MAX}			75	
			LM4040EEM3	$T_A = T_J$ = 25°C		47	67	
				$T_A = T_J = T_{MIN}$ to T_{MAX}			75	
$\Delta V_R/\Delta T$	Average Reverse Breakdown Voltage Temperature Coefficient[3]	I_R = 10mA				±20		ppm/°C
		I_R = 1mA	LM4040CEM3	$T_A = T_J$ = 25°C		±15		
				$T_A = T_J = T_{MIN}$ to T_{MAX}			±100	
			LM4040DEM3	$T_A = T_J$ = 25°C		±15		
				$T_A = T_J = T_{MIN}$ to T_{MAX}			±150	
			LM4040EEM3	$T_A = T_J$ = 25°C		±15		
				$T_A = T_J = T_{MIN}$ to T_{MAX}			±150	
		I_R = 100µA				±15		
$\Delta V_R/\Delta I_R$	Reverse Breakdown Voltage Change with Operating Current Change[4]	$I_{RMIN} \le I_R \le$ 1mA	LM4040CEM3	$T_A = T_J$ = 25°C		0.4	0.8	mV
				$T_A = T_J = T_{MIN}$ to T_{MAX}			1.1	
			LM4040DEM3	$T_A = T_J$ = 25°C		0.4	1.1	
				$T_A = T_J = T_{MIN}$ to T_{MAX}			1.3	
			LM4040EEM3	$T_A = T_J$ = 25°C		0.4	1.1	
				$T_A = T_J = T_{MIN}$ to T_{MAX}			1.3	
		1mA $\le I_R \le$ 15mA	LM4040CEM3	$T_A = T_J$ = 25°C		2.7	6.0	
				$T_A = T_J = T_{MIN}$ to T_{MAX}			9	
			LM4040DEM3	$T_A = T_J$ = 25°C		2.7	8	
				$T_A = T_J = T_{MIN}$ to T_{MAX}			11.0	
			LM4040EEM3	$T_A = T_J$ = 25°C		2.7	8	
				$T_A = T_J = T_{MIN}$ to T_{MAX}			11.0	
Z_R	Reverse Dynamic Impedance	I_R = 1mA, f = 120Hz, I_{AC} = 0.1 I_R	LM4040CEM3			0.4	0.9	Ω
			LM4040DEM3			0.4	1.2	
			LM4040EEM3			0.4	1.2	
e_N	Wideband Noise	I_R = 100µA 10Hz ≤ f ≤ 10kHz				35		μV_{rms}
ΔV_R	Reverse Breakdown Voltage Long Term Stability	t = 1000 hrs T = 25°C ±0.1°C I_R = 100µA				120		ppm
V_{HYST}	Thermal Hysteresis[5]	ΔT = −40°C to 125°C				0.08%		

(1) Typicals are at T_J = 25°C and represent most likely parametric norm.
(2) Limits are 100% production tested at 25°C. Limits over temperature are verified through correlation using Statistical Quality Control (SQC) methods. The limits are used to calculate AOQL.

Copyright © 2024 Texas Instruments Incorporated

(3) The (overtemperature) limit for Reverse Breakdown Voltage Tolerance is defined as the room temperature Reverse Breakdown Voltage Tolerance ±[($\Delta V_R/\Delta T$)(maxΔT)(V_R)]. Where, $\Delta V_R/\Delta T$ is the V_R temperature coefficient, maxΔT is the maximum difference in temperature from the reference point of 25°C to T_{MIN} or T_{MAX}, and V_R is the reverse breakdown voltage. The total overtemperature tolerance for the different grades in the industrial temperature range where maxΔT = 65°C is shown below:
A-grade: ±0.75% = ±0.1% ±100ppm/°C × 65°C
B-grade: ±0.85% = ±0.2% ±100ppm/°C × 65°C
C-grade: ±1.15% = ±0.5% ±100ppm/°C × 65°C
D-grade: ±1.98% = ±1.0% ±150ppm/°C × 65°C
E-grade: ±2.98% = ±2.0% ±150ppm/°C × 65°C
The total overtemperature tolerance for the different grades in the extended temperature range where max ΔT = 100 °C is shown below:
C-grade: ±1.5% = ±0.5% ±100ppm/°C × 100°C
D-grade: ±2.5% = ±1.0% ±150ppm/°C × 100°C
E-grade: ±3.5% = ±2.0% ±150ppm/°C × 100°C
Therefore, as an example, the A-grade 2.5V LM4040-N has an overtemperature Reverse Breakdown Voltage tolerance of ±2.5V × 0.75% = ±19 mV.

(4) Load regulation is measured on pulse basis from no load to the specified load current. Output changes due to die temperature change must be taken into account separately.

(5) Thermal hysteresis is defined as the difference in voltage measured at +25°C after cycling to temperature -40°C and the 25°C measurement after cycling to temperature 125°C.

Copyright © 2024 Texas Instruments Incorporated

5.14 Electrical Characteristics: 4.1V LM4040-N V_R Tolerance Grades 'A' And 'B'; Temperature Grade 'I'

all other limits $T_A = T_J = 25°C$. The grades A and B designate initial Reverse Breakdown Voltage tolerances of ±0.1% and ±0.2%, respectively.

PARAMETER		TEST CONDITIONS			MIN(2)	TYP(1)	MAX(2)	UNIT
V_R	Reverse Breakdown Voltage	I_R = 100µA				4.096		V
	Reverse Breakdown Voltage Tolerance(3)	I_R = 100µA	LM4040AIM3 LM4040AIZ	$T_A = T_J$ = 25°C			±4.1	mV
				$T_A = T_J = T_{MIN}$ to T_{MAX}			±31	
			LM4040BIM3 LM4040BIZ LM4040BIM7	$T_A = T_J$ = 25°C			±8.2	
				$T_A = T_J = T_{MIN}$ to T_{MAX}			±35	
I_{RMIN}	Minimum Operating Current		$T_A = T_J$ = 25°C			50	68	µA
			$T_A = T_J = T_{MIN}$ to T_{MAX}				73	
$\Delta V_R/\Delta T$	Average Reverse Breakdown Voltage Temperature Coefficient(3)	I_R = 10mA				±30		ppm/°C
		I_R = 1mA	$T_A = T_J$ = 25°C			±20		
			$T_A = T_J = T_{MIN}$ to T_{MAX}				±100	
		I_R = 100µA				±20		
$\Delta V_R/\Delta I_R$	Reverse Breakdown Voltage Change with Operating Current Change(4)	$I_{RMIN} \le I_R \le$ 1mA	$T_A = T_J$ = 25°C			0.5	0.9	mV
			$T_A = T_J = T_{MIN}$ to T_{MAX}				1.2	
		1mA ≤ I_R ≤ 15mA	$T_A = T_J$ = 25°C			3	7	
			$T_A = T_J = T_{MIN}$ to T_{MAX}				10	
Z_R	Reverse Dynamic Impedance	I_R = 1mA, f = 120Hz, I_{AC} = 0.1 I_R				0.5	1	Ω
e_N	Wideband Noise	I_R = 100µA 10Hz ≤ f ≤ 10kHz				80		μV_{rms}
ΔV_R	Reverse Breakdown Voltage Long Term Stability	t = 1000 hrs T = 25°C ±0.1°C I_R = 100µA				120		ppm
V_{HYST}	Thermal Hysteresis(5)	ΔT = −40°C to 125°C				0.08%		

(1) Typicals are at T_J = 25°C and represent most likely parametric norm.
(2) Limits are 100% production tested at 25°C. Limits over temperature are verified through correlation using Statistical Quality Control (SQC) methods. The limits are used to calculate AOQL.
(3) The (overtemperature) limit for Reverse Breakdown Voltage Tolerance is defined as the room temperature Reverse Breakdown Voltage Tolerance ±[($\Delta V_R/\Delta T$)(maxΔT)(V_R)]. Where, $\Delta V_R/\Delta T$ is the V_R temperature coefficient, maxΔT is the maximum difference in temperature from the reference point of 25°C to T_{MIN} or T_{MAX}, and V_R is the reverse breakdown voltage. The total overtemperature tolerance for the different grades in the industrial temperature range where maxΔT = 65°C is shown below:
A-grade: ±0.75% = ±0.1% ±100ppm/°C × 65°C
B-grade: ±0.85% = ±0.2% ±100ppm/°C × 65°C
C-grade: ±1.15% = ±0.5% ±100ppm/°C × 65°C
D-grade: ±1.98% = ±1.0% ±150ppm/°C × 65°C
E-grade: ±2.98% = ±2.0% ±150ppm/°C × 65°C
The total overtemperature tolerance for the different grades in the extended temperature range where max ΔT = 100 °C is shown below:
C-grade: ±1.5% = ±0.5% ±100ppm/°C × 100°C
D-grade: ±2.5% = ±1.0% ±150ppm/°C × 100°C
E-grade: ±3.5% = ±2.0% ±150ppm/°C × 100°C
Therefore, as an example, the A-grade 2.5V LM4040-N has an overtemperature Reverse Breakdown Voltage tolerance of ±2.5V × 0.75% = ±19 mV.
(4) Load regulation is measured on pulse basis from no load to the specified load current. Output changes due to die temperature change must be taken into account separately.
(5) Thermal hysteresis is defined as the difference in voltage measured at +25°C after cycling to temperature -40°C and the 25°C measurement after cycling to temperature 125°C.

Copyright © 2024 Texas Instruments Incorporated

5.15 Electrical Characteristics: 4.1V LM4040-N V_R Tolerance Grades 'C' and 'D'; Temperature Grade 'I'

all other limits $T_A = T_J = 25°C$. The grades C and D designate initial Reverse Breakdown Voltage tolerances of ±0.5% and ±1%, respectively.

PARAMETER		TEST CONDITIONS			MIN(2)	TYP(1)	MAX(2)	UNIT
V_R	Reverse Breakdown Voltage	I_R = 100µA				4.096		V
	Reverse Breakdown Voltage Tolerance(3)	I_R = 100µA	LM4040CIM3 LM4040CIZ LM4040CIM7	$T_A = T_J$ = 25°C			±20	mV
				$T_A = T_J = T_{MIN}$ to T_{MAX}			±47	
			LM4040DIM3 LM4040DIZ LM4040DIM7	$T_A = T_J$ = 25°C			±41	
				$T_A = T_J = T_{MIN}$ to T_{MAX}			±81	
I_{RMIN}	Minimum Operating Current		LM4040CIM3 LM4040CIZ LM4040CIM7	$T_A = T_J$ = 25°C		50	68	µA
				$T_A = T_J = T_{MIN}$ to T_{MAX}			73	
			LM4040DIM3 LM4040DIZ LM4040DIM7	$T_A = T_J$ = 25°C		50	73	
				$T_A = T_J = T_{MIN}$ to T_{MAX}			78	
$\Delta V_R/\Delta T$	Average Reverse Breakdown Voltage Temperature Coefficient(3)	I_R = 10mA				±30		ppm/°C
		I_R = 1mA	LM4040CIM3 LM4040CIZ LM4040CIM7	$T_A = T_J$ = 25°C		±20		
				$T_A = T_J = T_{MIN}$ to T_{MAX}			±100	
			LM4040DIM3 LM4040DIZ LM4040DIM7	$T_A = T_J$ = 25°C		±20		
				$T_A = T_J = T_{MIN}$ to T_{MAX}			±150	
		I_R = 100µA				±20		
$\Delta V_R/\Delta I_R$	Reverse Breakdown Voltage Change with Operating Current Change(4)	$I_{RMIN} \le I_R \le$ 1mA	LM4040CIM3 LM4040CIZ LM4040CIM7	$T_A = T_J$ = 25°C		0.5	0.9	mV
				$T_A = T_J = T_{MIN}$ to T_{MAX}			1.2	
			LM4040DIM3 LM4040DIZ LM4040DIM7	$T_A = T_J$ = 25°C		0.5	1.2	
				$T_A = T_J = T_{MIN}$ to T_{MAX}			1.5	
		1mA $\le I_R \le$ 15mA	LM4040CIM3 LM4040CIZ LM4040CIM7	$T_A = T_J$ = 25°C		3	7	
				$T_A = T_J = T_{MIN}$ to T_{MAX}			10	
			LM4040DIM3 LM4040DIZ LM4040DIM7	$T_A = T_J$ = 25°C		3	9	
				$T_A = T_J = T_{MIN}$ to T_{MAX}			13	
Z_R	Reverse Dynamic Impedance	I_R = 1mA, f = 120Hz, I_{AC} = 0.1 I_R	LM4040CIM3 LM4040CIZ LM4040CIM7			0.5	1	Ω
			LM4040DIM3 LM4040DIZ LM4040DIM7			0.5	1.3	
e_N	Wideband Noise	I_R = 100µA 10Hz ≤ f ≤ 10kHz				80		μV_{rms}
ΔV_R	Reverse Breakdown Voltage Long Term Stability	t = 1000 hrs T = 25°C ±0.1°C I_R = 100µA				120		ppm
V_{HYST}	Thermal Hysteresis(5)	ΔT = −40°C to 125°C				0.08%		

(1) Typicals are at T_J = 25°C and represent most likely parametric norm.
(2) Limits are 100% production tested at 25°C. Limits over temperature are verified through correlation using Statistical Quality Control (SQC) methods. The limits are used to calculate AOQL.
(3) The (overtemperature) limit for Reverse Breakdown Voltage Tolerance is defined as the room temperature Reverse Breakdown Voltage Tolerance ±[($\Delta V_R/\Delta T$)(maxΔT)(V_R)]. Where, $\Delta V_R/\Delta T$ is the V_R temperature coefficient, maxΔT is the maximum difference in temperature from the reference point of 25°C to T_{MIN} or T_{MAX}, and V_R is the reverse breakdown voltage. The total overtemperature tolerance for the different grades in the industrial temperature range where maxΔT = 65°C is shown below:
A-grade: ±0.75% = ±0.1% ±100ppm/°C × 65°C
B-grade: ±0.85% = ±0.2% ±100ppm/°C × 65°C
C-grade: ±1.15% = ±0.5% ±100ppm/°C × 65°C
D-grade: ±1.98% = ±1.0% ±150ppm/°C × 65°C
E-grade: ±2.98% = ±2.0% ±150ppm/°C × 65°C

Copyright © 2024 Texas Instruments Incorporated

The total overtemperature tolerance for the different grades in the extended temperature range where max ΔT = 100 °C is shown below:
C-grade: ±1.5% = ±0.5% ±100ppm/°C × 100°C
D-grade: ±2.5% = ±1.0% ±150ppm/°C × 100°C
E-grade: ±3.5% = ±2.0% ±150ppm/°C × 100°C
Therefore, as an example, the A-grade 2.5V LM4040-N has an overtemperature Reverse Breakdown Voltage tolerance of ±2.5V × 0.75% = ±19 mV.

(4) Load regulation is measured on pulse basis from no load to the specified load current. Output changes due to die temperature change must be taken into account separately.

(5) Thermal hysteresis is defined as the difference in voltage measured at +25°C after cycling to temperature -40°C and the 25°C measurement after cycling to temperature 125°C.

Copyright © 2024 Texas Instruments Incorporated

5.16 Electrical Characteristics: 5V LM4040-N V_R Tolerance Grades 'A' And 'B'; Temperature Grade 'I'

all other limits $T_A = T_J = 25°C$. The grades A and B designate initial Reverse Breakdown Voltage tolerances of ±0.1% and ±0.2%, respectively.

PARAMETER		TEST CONDITIONS			MIN(2)	TYP(1)	MAX(2)	UNIT
V_R	Reverse Breakdown Voltage	I_R = 100µA				5		V
	Reverse Breakdown Voltage Tolerance(3)	I_R = 100µA	LM4040AIM3 LM4040AIZ	$T_A = T_J$ = 25°C			±5	mV
				$T_A = T_J = T_{MIN}$ to T_{MAX}			±38	
			LM4040BIM3 LM4040BIZ LM4040BIM7	$T_A = T_J$ = 25°C			±10	
				$T_A = T_J = T_{MIN}$ to T_{MAX}			±43	
I_{RMIN}	Minimum Operating Current		$T_A = T_J$ = 25°C			54	74	µA
			$T_A = T_J = T_{MIN}$ to T_{MAX}				80	
$\Delta V_R/\Delta T$	Average Reverse Breakdown Voltage Temperature Coefficient(3)	I_R = 10mA				±30		ppm/°C
		I_R = 1mA	$T_A = T_J$ = 25°C			±20		
			$T_A = T_J = T_{MIN}$ to T_{MAX}				±100	
		I_R = 100µA				±20		
$\Delta V_R/\Delta I_R$	Reverse Breakdown Voltage Change with Operating Current Change(4)	$I_{RMIN} \le I_R \le$ 1mA	$T_A = T_J$ = 25°C			0.5	1	mV
			$T_A = T_J = T_{MIN}$ to T_{MAX}				1.4	
		1mA $\le I_R \le$ 15mA	$T_A = T_J$ = 25°C			3.5	8	
			$T_A = T_J = T_{MIN}$ to T_{MAX}				12	
Z_R	Reverse Dynamic Impedance	I_R = 1mA, f = 120Hz, I_{AC} = 0.1 I_R				0.5	1.1	Ω
e_N	Wideband Noise	I_R = 100µA 10Hz ≤ f ≤ 10kHz				80		μV_{rms}
ΔV_R	Reverse Breakdown Voltage Long Term Stability	t = 1000 hrs T = 25°C ±0.1°C I_R = 100µA				120		ppm
V_{HYST}	Thermal Hysteresis(5)	ΔT = −40°C to 125°C				0.08%		

(1) Typicals are at T_J = 25°C and represent most likely parametric norm.
(2) Limits are 100% production tested at 25°C. Limits over temperature are verified through correlation using Statistical Quality Control (SQC) methods. The limits are used to calculate AOQL.
(3) The (overtemperature) limit for Reverse Breakdown Voltage Tolerance is defined as the room temperature Reverse Breakdown Voltage Tolerance $\pm[(\Delta V_R/\Delta T)(\max\Delta T)(V_R)]$. Where, $\Delta V_R/\Delta T$ is the V_R temperature coefficient, maxΔT is the maximum difference in temperature from the reference point of 25°C to T_{MIN} or T_{MAX}, and V_R is the reverse breakdown voltage. The total overtemperature tolerance for the different grades in the industrial temperature range where maxΔT = 65°C is shown below:
A-grade: ±0.75% = ±0.1% ±100ppm/°C × 65°C
B-grade: ±0.85% = ±0.2% ±100ppm/°C × 65°C
C-grade: ±1.15% = ±0.5% ±100ppm/°C × 65°C
D-grade: ±1.98% = ±1.0% ±150ppm/°C × 65°C
E-grade: ±2.98% = ±2.0% ±150ppm/°C × 65°C
The total overtemperature tolerance for the different grades in the extended temperature range where max ΔT = 100 °C is shown below:
C-grade: ±1.5% = ±0.5% ±100ppm/°C × 100°C
D-grade: ±2.5% = ±1.0% ±150ppm/°C × 100°C
E-grade: ±3.5% = ±2.0% ±150ppm/°C × 100°C
Therefore, as an example, the A-grade 2.5V LM4040-N has an overtemperature Reverse Breakdown Voltage tolerance of ±2.5V × 0.75% = ±19 mV.
(4) Load regulation is measured on pulse basis from no load to the specified load current. Output changes due to die temperature change must be taken into account separately.
(5) Thermal hysteresis is defined as the difference in voltage measured at +25°C after cycling to temperature -40°C and the 25°C measurement after cycling to temperature 125°C.

5.17 Electrical Characteristics: 5V LM4040-N V_R Tolerance Grades 'C' And 'D'; Temperature Grade 'I'

all other limits $T_A = T_J = 25°C$. The grades C and D designate initial Reverse Breakdown Voltage tolerances of ±0.5% and ±1%, respectively.

PARAMETER		TEST CONDITIONS			MIN(2)	TYP(1)	MAX(2)	UNIT
V_R	Reverse Breakdown Voltage	I_R = 100µA				5		V
	Reverse Breakdown Voltage Tolerance(3)	I_R = 100µA	LM4040CIM3 LM4040CIZ LM4040CIM7	$T_A = T_J$ = 25°C			±25	mV
				$T_A = T_J = T_{MIN}$ to T_{MAX}			±58	
			LM4040DIM3 LM4040DIZ LM4040DIM7	$T_A = T_J$ = 25°C			±50	
				$T_A = T_J = T_{MIN}$ to T_{MAX}			±99	
I_{RMIN}	Minimum Operating Current		LM4040CIM3 LM4040CIZ LM4040CIM7	$T_A = T_J$ = 25°C		54	74	µA
				$T_A = T_J = T_{MIN}$ to T_{MAX}			80	
			LM4040DIM3 LM4040DIZ LM4040DIM7	$T_A = T_J$ = 25°C		54	79	
				$T_A = T_J = T_{MIN}$ to T_{MAX}			85	
$\Delta V_R/\Delta T$	Average Reverse Breakdown Voltage Temperature Coefficient(3)	I_R = 10mA				±30		ppm/°C
		I_R = 1mA	LM4040CIM3 LM4040CIZ LM4040CIM7	$T_A = T_J$ = 25°C		±20		
				$T_A = T_J = T_{MIN}$ to T_{MAX}			±100	
			LM4040DIM3 LM4040DIZ LM4040DIM7	$T_A = T_J$ = 25°C		±20		
				$T_A = T_J = T_{MIN}$ to T_{MAX}			±150	
		I_R = 100µA				±20		
$\Delta V_R/\Delta I_R$	Reverse Breakdown Voltage Change with Operating Current Change(4)	$I_{RMIN} \le I_R \le$ 1mA	LM4040CIM3 LM4040CIZ LM4040CIM7	$T_A = T_J$ = 25°C		0.5	1	mV
				$T_A = T_J = T_{MIN}$ to T_{MAX}			1.4	
			LM4040DIM3 LM4040DIZ LM4040DIM7	$T_A = T_J$ = 25°C		0.5	1.3	
				$T_A = T_J = T_{MIN}$ to T_{MAX}			1.8	
		1mA $\le I_R \le$ 15mA	LM4040CIM3 LM4040CIZ LM4040CIM7	$T_A = T_J$ = 25°C		3.5	8	
				$T_A = T_J = T_{MIN}$ to T_{MAX}			12	
			LM4040DIM3 LM4040DIZ LM4040DIM7	$T_A = T_J$ = 25°C		3.5	10	
				$T_A = T_J = T_{MIN}$ to T_{MAX}			15	
Z_R	Reverse Dynamic Impedance	I_R = 1mA, f = 120Hz, I_{AC} = 0.1 I_R	$T_A = T_J$ = 25°C			0.5	1.1	Ω
			$T_A = T_J = T_{MIN}$ to T_{MAX}				1.5	
e_N	Wideband Noise	I_R = 100µA 10Hz ≤ f ≤ 10kHz				80		μV_{rms}
ΔV_R	Reverse Breakdown Voltage Long Term Stability	t = 1000 hrs T = 25°C ±0.1°C I_R = 100µA				120		ppm
V_{HYST}	Thermal Hysteresis(5)	ΔT = −40°C to 125°C				0.08%		

(1) Typicals are at T_J = 25°C and represent most likely parametric norm.
(2) Limits are 100% production tested at 25°C. Limits over temperature are verified through correlation using Statistical Quality Control (SQC) methods. The limits are used to calculate AOQL.
(3) The (overtemperature) limit for Reverse Breakdown Voltage Tolerance is defined as the room temperature Reverse Breakdown Voltage Tolerance ±[($\Delta V_R/\Delta T$)(maxΔT)(V_R)]. Where, $\Delta V_R/\Delta T$ is the V_R temperature coefficient, maxΔT is the maximum difference in temperature from the reference point of 25°C to T_{MIN} or T_{MAX}, and V_R is the reverse breakdown voltage. The total overtemperature tolerance for the different grades in the industrial temperature range where maxΔT = 65°C is shown below:
A-grade: ±0.75% = ±0.1% ±100ppm/°C × 65°C
B-grade: ±0.85% = ±0.2% ±100ppm/°C × 65°C
C-grade: ±1.15% = ±0.5% ±100ppm/°C × 65°C
D-grade: ±1.98% = ±1.0% ±150ppm/°C × 65°C
E-grade: ±2.98% = ±2.0% ±150ppm/°C × 65°C
The total overtemperature tolerance for the different grades in the extended temperature range where max ΔT = 100 °C is shown below:
C-grade: ±1.5% = ±0.5% ±100ppm/°C × 100°C

Copyright © 2024 Texas Instruments Incorporated

D-grade: ±2.5% = ±1.0% ±150ppm/°C × 100°C
E-grade: ±3.5% = ±2.0% ±150ppm/°C × 100°C
Therefore, as an example, the A-grade 2.5V LM4040-N has an overtemperature Reverse Breakdown Voltage tolerance of ±2.5V × 0.75% = ±19 mV.

(4) Load regulation is measured on pulse basis from no load to the specified load current. Output changes due to die temperature change must be taken into account separately.

(5) Thermal hysteresis is defined as the difference in voltage measured at +25°C after cycling to temperature -40°C and the 25°C measurement after cycling to temperature 125°C.

5.18 Electrical Characteristics: 5V LM4040-N V_R Tolerance Grades 'C' And 'D'; Temperature Grade 'E'

all other limits $T_A = T_J = 25°C$. The grades C and D designate initial Reverse Breakdown Voltage tolerances of ±0.5% and ±1%, respectively.

PARAMETER		TEST CONDITIONS			MIN[1]	TYP	MAX[1]	UNIT
V_R	Reverse Breakdown Voltage	I_R = 100µA				5		V
	Reverse Breakdown Voltage Tolerance[2]	I_R = 100µA	LM4040CEM3	$T_A = T_J$ = 25°C			±25	mV
				$T_A = T_J = T_{MIN}$ to T_{MAX}			±75	
			LM4040DEM3	$T_A = T_J$ = 25°C			±50	
				$T_A = T_J = T_{MIN}$ to T_{MAX}			±125	
I_{RMIN}	Minimum Operating Current		LM4040CEM3	$T_A = T_J$ = 25°C		54	74	µA
				$T_A = T_J = T_{MIN}$ to T_{MAX}			83	
			LM4040DEM3	$T_A = T_J$ = 25°C		54	79	
				$T_A = T_J = T_{MIN}$ to T_{MAX}			88	
$\Delta V_R/\Delta T$	Average Reverse Breakdown Voltage Temperature Coefficient[2]	I_R = 10mA				±30		ppm/°C
		I_R = 1mA	LM4040CEM3	$T_A = T_J$ = 25°C		±20		
				$T_A = T_J = T_{MIN}$ to T_{MAX}			±100	
			LM4040DEM3	$T_A = T_J$ = 25°C		±20		
				$T_A = T_J = T_{MIN}$ to T_{MAX}			±150	
		I_R = 100µA				±20		
$\Delta V_R/\Delta I_R$	Reverse Breakdown Voltage Change with Operating Current Change[3]	$I_{RMIN} \le I_R \le$ 1mA	LM4040CEM3	$T_A = T_J$ = 25°C		0.5	1	mV
				$T_A = T_J = T_{MIN}$ to T_{MAX}			1.4	
			LM4040DEM3	$T_A = T_J$ = 25°C		0.5	1	
				$T_A = T_J = T_{MIN}$ to T_{MAX}			1.8	
		1mA $\le I_R \le$ 15mA	LM4040CEM3	$T_A = T_J$ = 25°C		3.5	8	
				$T_A = T_J = T_{MIN}$ to T_{MAX}			12	
			LM4040DEM3	$T_A = T_J$ = 25°C		3.5	8	
				$T_A = T_J = T_{MIN}$ to T_{MAX}			15	
Z_R	Reverse Dynamic Impedance	I_R = 1mA, f = 120Hz, I_{AC} = 0.1 I_R				0.5	1.1	Ω
e_N	Wideband Noise	I_R = 100µA 10Hz ≤ f ≤ 10kHz				80		μV_{rms}
ΔV_R	Reverse Breakdown Voltage Long Term Stability	t = 1000 hrs T = 25°C ±0.1°C I_R = 100µA				120		ppm
V_{HYST}	Thermal Hysteresis[4]	ΔT = −40°C to 125°C				0.08%		

(1) Limits are 100% production tested at 25°C. Limits over temperature are verified through correlation using Statistical Quality Control (SQC) methods. The limits are used to calculate AOQL.

(2) The (overtemperature) limit for Reverse Breakdown Voltage Tolerance is defined as the room temperature Reverse Breakdown Voltage Tolerance $\pm[(\Delta V_R/\Delta T)(\max\Delta T)(V_R)]$. Where, $\Delta V_R/\Delta T$ is the V_R temperature coefficient, maxΔT is the maximum difference in temperature from the reference point of 25°C to T_{MIN} or T_{MAX}, and V_R is the reverse breakdown voltage. The total overtemperature tolerance for the different grades in the industrial temperature range where maxΔT = 65°C is shown below:
A-grade: ±0.75% = ±0.1% ±100ppm/°C × 65°C
B-grade: ±0.85% = ±0.2% ±100ppm/°C × 65°C
C-grade: ±1.15% = ±0.5% ±100ppm/°C × 65°C
D-grade: ±1.98% = ±1.0% ±150ppm/°C × 65°C
E-grade: ±2.98% = ±2.0% ±150ppm/°C × 65°C
The total overtemperature tolerance for the different grades in the extended temperature range where max ΔT = 100 °C is shown below:
C-grade: ±1.5% = ±0.5% ±100ppm/°C × 100°C
D-grade: ±2.5% = ±1.0% ±150ppm/°C × 100°C
E-grade: ±3.5% = ±2.0% ±150ppm/°C × 100°C
Therefore, as an example, the A-grade 2.5V LM4040-N has an overtemperature Reverse Breakdown Voltage tolerance of ±2.5V × 0.75% = ±19 mV.

(3) Load regulation is measured on pulse basis from no load to the specified load current. Output changes due to die temperature change must be taken into account separately.

Copyright © 2024 Texas Instruments Incorporated

(4) Thermal hysteresis is defined as the difference in voltage measured at +25°C after cycling to temperature -40°C and the 25°C measurement after cycling to temperature 125°C.

5.19 Electrical Characteristics: 8.2V LM4040-N V_R Tolerance Grades 'A' And 'B'; Temperature Grade 'I'

all other limits $T_A = T_J = 25°C$. The grades A and B designate initial Reverse Breakdown Voltage tolerances of ±0.1% and ±0.2%, respectively.

PARAMETER		TEST CONDITIONS			MIN(2)	TYP(1)	MAX(2)	UNIT
V_R	Reverse Breakdown Voltage	I_R = 150µA				8.192		V
	Reverse Breakdown Voltage Tolerance(3)	I_R = 150µA	LM4040AIM3 LM4040AIZ	$T_A = T_J$ = 25°C			±8.2	mV
				$T_A = T_J = T_{MIN}$ to T_{MAX}			±61	
			LM4040BIM3 LM4040BIZ	$T_A = T_J$ = 25°C			±16	
				$T_A = T_J = T_{MIN}$ to T_{MAX}			±70	
I_{RMIN}	Minimum Operating Current		$T_A = T_J$ = 25°C			67	91	µA
			$T_A = T_J = T_{MIN}$ to T_{MAX}				95	
$\Delta V_R/\Delta T$	Average Reverse Breakdown Voltage Temperature Coefficient(3)	I_R = 10mA				±40		ppm/°C
		I_R = 1mA	$T_A = T_J$ = 25°C			±20		
			$T_A = T_J = T_{MIN}$ to T_{MAX}				±100	
		I_R = 150µA				±20		
$\Delta V_R/\Delta I_R$	Reverse Breakdown Voltage Change with Operating Current Change(4)	$I_{RMIN} \le I_R \le$ 1mA	$T_A = T_J$ = 25°C			0.6	1.3	mV
			$T_A = T_J = T_{MIN}$ to T_{MAX}				2.5	
		1mA $\le I_R \le$ 15mA	$T_A = T_J$ = 25°C			7	10	
			$T_A = T_J = T_{MIN}$ to T_{MAX}				18	
Z_R	Reverse Dynamic Impedance	I_R = 1mA, f = 120Hz, I_{AC} = 0.1 I_R				0.6	1.5	Ω
e_N	Wideband Noise	I_R = 150µA 10Hz ≤ f ≤ 10kHz				130		μV_{rms}
ΔV_R	Reverse Breakdown Voltage Long Term Stability	t = 1000 hrs T = 25°C ±0.1°C I_R = 150µA				120		ppm
V_{HYST}	Thermal Hysteresis(5)	ΔT = −40°C to 125°C				0.08%		

(1) Typicals are at T_J = 25°C and represent most likely parametric norm.
(2) Limits are 100% production tested at 25°C. Limits over temperature are verified through correlation using Statistical Quality Control (SQC) methods. The limits are used to calculate AOQL.
(3) The (overtemperature) limit for Reverse Breakdown Voltage Tolerance is defined as the room temperature Reverse Breakdown Voltage Tolerance ±[($\Delta V_R/\Delta T$)(maxΔT)(V_R)]. Where, $\Delta V_R/\Delta T$ is the V_R temperature coefficient, maxΔT is the maximum difference in temperature from the reference point of 25°C to T_{MIN} or T_{MAX}, and V_R is the reverse breakdown voltage. The total overtemperature tolerance for the different grades in the industrial temperature range where maxΔT = 65°C is shown below:
A-grade: ±0.75% = ±0.1% ±100ppm/°C × 65°C
B-grade: ±0.85% = ±0.2% ±100ppm/°C × 65°C
C-grade: ±1.15% = ±0.5% ±100ppm/°C × 65°C
D-grade: ±1.98% = ±1.0% ±150ppm/°C × 65°C
E-grade: ±2.98% = ±2.0% ±150ppm/°C × 65°C
The total overtemperature tolerance for the different grades in the extended temperature range where max ΔT = 100 °C is shown below:
C-grade: ±1.5% = ±0.5% ±100ppm/°C × 100°C
D-grade: ±2.5% = ±1.0% ±150ppm/°C × 100°C
E-grade: ±3.5% = ±2.0% ±150ppm/°C × 100°C
Therefore, as an example, the A-grade 2.5V LM4040-N has an overtemperature Reverse Breakdown Voltage tolerance of ±2.5V × 0.75% = ±19 mV.
(4) Load regulation is measured on pulse basis from no load to the specified load current. Output changes due to die temperature change must be taken into account separately.
(5) Thermal hysteresis is defined as the difference in voltage measured at +25°C after cycling to temperature -40°C and the 25°C measurement after cycling to temperature 125°C.

Copyright © 2024 Texas Instruments Incorporated

5.20 Electrical Characteristics: 8.2V Lm4040-N V_R Tolerance Grades 'C' And 'D'; Temperature Grade 'I'

all other limits $T_A = T_J = 25°C$. The grades C and D designate initial Reverse Breakdown Voltage tolerances of ±0.5% and ±1%, respectively.

PARAMETER		TEST CONDITIONS			MIN(2)	TYP(1)	MAX(2)	UNIT
V_R	Reverse Breakdown Voltage	I_R = 150µA				8.192		V
	Reverse Breakdown Voltage Tolerance(3)	I_R = 150µA	LM4040CIM3 LM4040CIZ	$T_A = T_J$ = 25°C			±41	mV
				$T_A = T_J = T_{MIN}$ to T_{MAX}			±94	
			LM4040DIM3 LM4040DIZ	$T_A = T_J$ = 25°C			±82	
				$T_A = T_J = T_{MIN}$ to T_{MAX}			±162	
I_{RMIN}	Minimum Operating Current		LM4040CIM3 LM4040CIZ	$T_A = T_J$ = 25°C		67	91	µA
				$T_A = T_J = T_{MIN}$ to T_{MAX}			95	
			LM4040DIM3 LM4040DIZ	$T_A = T_J$ = 25°C		67	96	
				$T_A = T_J = T_{MIN}$ to T_{MAX}			100	
$\Delta V_R/\Delta T$	Average Reverse Breakdown Voltage Temperature Coefficient(3)	I_R = 10mA				±40		ppm/°C
		I_R = 1mA	LM4040CIM3 LM4040CIZ	$T_A = T_J$ = 25°C		±20		
				$T_A = T_J = T_{MIN}$ to T_{MAX}			±100	
			LM4040DIM3 LM4040DIZ	$T_A = T_J$ = 25°C		±20		
				$T_A = T_J = T_{MIN}$ to T_{MAX}			±150	
		I_R = 150µA				±20		
$\Delta V_R/\Delta I_R$	Reverse Breakdown Voltage Change with Operating Current Change(4)	$I_{RMIN} \le I_R \le$ 1mA	LM4040CIM3 LM4040CIZ	$T_A = T_J$ = 25°C		0.6	1.3	mV
				$T_A = T_J = T_{MIN}$ to T_{MAX}			2.5	
			LM4040DIM3 LM4040DIZ	$T_A = T_J$ = 25°C		0.6	1.7	
				$T_A = T_J = T_{MIN}$ to T_{MAX}			3	
		1mA ≤ I_R ≤ 15mA	LM4040CIM3 LM4040CIZ	$T_A = T_J$ = 25°C		7	10	
				$T_A = T_J = T_{MIN}$ to T_{MAX}			18	
			LM4040DIM3 LM4040DIZ	$T_A = T_J$ = 25°C		7	15	
				$T_A = T_J = T_{MIN}$ to T_{MAX}			24	
Z_R	Reverse Dynamic Impedance	I_R = 1mA, f = 120Hz, I_{AC} = 0.1 I_R	LM4040CIM3 LM4040CIZ			0.6	1.5	Ω
			LM4040DIM3 LM4040DIZ			0.6	1.9	
e_N	Wideband Noise	I_R = 150µA 10Hz ≤ f ≤ 10kHz				130		μV_{rms}
ΔV_R	Reverse Breakdown Voltage Long Term Stability	t = 1000 hrs T = 25°C ±0.1°C I_R = 150µA				120		ppm
V_{HYST}	Thermal Hysteresis(5)	ΔT = −40°C to 125°C				0.08%		

(1) Typicals are at T_J = 25°C and represent most likely parametric norm.
(2) Limits are 100% production tested at 25°C. Limits over temperature are verified through correlation using Statistical Quality Control (SQC) methods. The limits are used to calculate AOQL.
(3) The (overtemperature) limit for Reverse Breakdown Voltage Tolerance is defined as the room temperature Reverse Breakdown Voltage Tolerance $\pm[(\Delta V_R/\Delta T)(\max\Delta T)(V_R)]$. Where, $\Delta V_R/\Delta T$ is the V_R temperature coefficient, maxΔT is the maximum difference in temperature from the reference point of 25°C to T_{MIN} or T_{MAX}, and V_R is the reverse breakdown voltage. The total overtemperature tolerance for the different grades in the industrial temperature range where maxΔT = 65°C is shown below:
A-grade: ±0.75% = ±0.1% ±100ppm/°C × 65°C
B-grade: ±0.85% = ±0.2% ±100ppm/°C × 65°C
C-grade: ±1.15% = ±0.5% ±100ppm/°C × 65°C
D-grade: ±1.98% = ±1.0% ±150ppm/°C × 65°C
E-grade: ±2.98% = ±2.0% ±150ppm/°C × 65°C
The total overtemperature tolerance for the different grades in the extended temperature range where max ΔT = 100 °C is shown below:
C-grade: ±1.5% = ±0.5% ±100ppm/°C × 100°C
D-grade: ±2.5% = ±1.0% ±150ppm/°C × 100°C
E-grade: ±3.5% = ±2.0% ±150ppm/°C × 100°C

Therefore, as an example, the A-grade 2.5V LM4040-N has an overtemperature Reverse Breakdown Voltage tolerance of ±2.5V × 0.75% = ±19 mV.

(4) Load regulation is measured on pulse basis from no load to the specified load current. Output changes due to die temperature change must be taken into account separately.

(5) Thermal hysteresis is defined as the difference in voltage measured at +25°C after cycling to temperature -40°C and the 25°C measurement after cycling to temperature 125°C.

5.21 Electrical Characteristics: 10V LM4040-N V_R Tolerance Grades 'A' And 'B'; Temperature Grade 'I'

all other limits $T_A = T_J = 25°C$. The grades A and B designate initial Reverse Breakdown Voltage tolerances of ±0.1% and ±0.2%, respectively.

PARAMETER		TEST CONDITIONS			MIN(2)	TYP(1)	MAX(2)	UNIT
V_R	Reverse Breakdown Voltage	I_R = 150µA				10		V
	Reverse Breakdown Voltage Tolerance(3)	I_R = 150µA	LM4040AIM3 LM4040AIZ	$T_A = T_J$ = 25°C			±10	mV
				$T_A = T_J = T_{MIN}$ to T_{MAX}			±75	
			LM4040BIM3 LM4040BIZ	$T_A = T_J$ = 25°C			±20	
				$T_A = T_J = T_{MIN}$ to T_{MAX}			±85	
I_{RMIN}	Minimum Operating Current		$T_A = T_J$ = 25°C			75	100	µA
			$T_A = T_J = T_{MIN}$ to T_{MAX}				103	
$\Delta V_R/\Delta T$	Average Reverse Breakdown Voltage Temperature Coefficient(3)	I_R = 10mA				±40		ppm/°C
		I_R = 1mA	$T_A = T_J$ = 25°C			±20		
			$T_A = T_J = T_{MIN}$ to T_{MAX}				±100	
		I_R = 150µA				±20		
$\Delta V_R/\Delta I_R$	Reverse Breakdown Voltage Change with Operating Current Change(4)	$I_{RMIN} \le I_R \le$ 1mA	$T_A = T_J$ = 25°C			0.8	1.5	mV
			$T_A = T_J = T_{MIN}$ to T_{MAX}				3.5	
		1mA ≤ I_R ≤ 15mA	$T_A = T_J$ = 25°C			8	12	
			$T_A = T_J = T_{MIN}$ to T_{MAX}				23	
Z_R	Reverse Dynamic Impedance	I_R = 1mA, f = 120Hz, I_{AC} = 0.1 I_R				0.7	1.7	Ω
e_N	Wideband Noise	I_R = 150µA 10Hz ≤ f ≤ 10kHz				180		μV_{rms}
ΔV_R	Reverse Breakdown Voltage Long Term Stability	t = 1000 hrs T = 25°C ±0.1°C I_R = 150µA				120		ppm
V_{HYST}	Thermal Hysteresis(5)	ΔT = −40°C to 125°C				0.08%		

(1) Typicals are at T_J = 25°C and represent most likely parametric norm.

(2) Limits are 100% production tested at 25°C. Limits over temperature are verified through correlation using Statistical Quality Control (SQC) methods. The limits are used to calculate AOQL.

(3) The (overtemperature) limit for Reverse Breakdown Voltage Tolerance is defined as the room temperature Reverse Breakdown Voltage Tolerance ±[($\Delta V_R/\Delta T$)(maxΔT)(V_R)]. Where, $\Delta V_R/\Delta T$ is the V_R temperature coefficient, maxΔT is the maximum difference in temperature from the reference point of 25°C to T_{MIN} or T_{MAX}, and V_R is the reverse breakdown voltage. The total overtemperature tolerance for the different grades in the industrial temperature range where maxΔT = 65°C is shown below:
A-grade: ±0.75% = ±0.1% ±100ppm/°C × 65°C
B-grade: ±0.85% = ±0.2% ±100ppm/°C × 65°C
C-grade: ±1.15% = ±0.5% ±100ppm/°C × 65°C
D-grade: ±1.98% = ±1.0% ±150ppm/°C × 65°C
E-grade: ±2.98% = ±2.0% ±150ppm/°C × 65°C
The total overtemperature tolerance for the different grades in the extended temperature range where max ΔT = 100 °C is shown below:
C-grade: ±1.5% = ±0.5% ±100ppm/°C × 100°C
D-grade: ±2.5% = ±1.0% ±150ppm/°C × 100°C
E-grade: ±3.5% = ±2.0% ±150ppm/°C × 100°C
Therefore, as an example, the A-grade 2.5V LM4040-N has an overtemperature Reverse Breakdown Voltage tolerance of ±2.5V × 0.75% = ±19 mV.

(4) Load regulation is measured on pulse basis from no load to the specified load current. Output changes due to die temperature change must be taken into account separately.

(5) Thermal hysteresis is defined as the difference in voltage measured at +25°C after cycling to temperature -40°C and the 25°C measurement after cycling to temperature 125°C.

Copyright © 2024 Texas Instruments Incorporated

5.22 Electrical Characteristics: 10V LM4040-N V_R Tolerance Grades 'C' And 'D'; Temperature Grade 'I'

all other limits $T_A = T_J = 25°C$. The grades C and D designate initial Reverse Breakdown Voltage tolerances of ±0.5% and ±1%, respectively.

PARAMETER		TEST CONDITIONS			MIN(2)	TYP(1)	MAX(2)	UNIT
V_R	Reverse Breakdown Voltage	I_R = 150µA				10		V
	Reverse Breakdown Voltage Tolerance(3)	I_R = 150µA	LM4040CIM3 LM4040CIZ	$T_A = T_J$ = 25°C			±50	mV
				$T_A = T_J = T_{MIN}$ to T_{MAX}			±115	
			LM4040DIM3 LM4040DIZ	$T_A = T_J$ = 25°C			±100	
				$T_A = T_J = T_{MIN}$ to T_{MAX}			±198	
I_{RMIN}	Minimum Operating Current		LM4040CIM3 LM4040CIZ	$T_A = T_J$ = 25°C		75	100	µA
				$T_A = T_J = T_{MIN}$ to T_{MAX}			103	
			LM4040DIM3 LM4040DIZ	$T_A = T_J$ = 25°C		75	110	
				$T_A = T_J = T_{MIN}$ to T_{MAX}			113	
$\Delta V_R/\Delta T$	Average Reverse Breakdown Voltage Temperature Coefficient(3)	I_R = 10mA				±40		ppm/°C
		I_R = 1mA	LM4040CIM3 LM4040CIZ	$T_A = T_J$ = 25°C		±20		
				$T_A = T_J = T_{MIN}$ to T_{MAX}			±100	
			LM4040DIM3 LM4040DIZ	$T_A = T_J$ = 25°C		±20		
				$T_A = T_J = T_{MIN}$ to T_{MAX}			±150	
		I_R = 150µA				±20		
$\Delta V_R/\Delta I_R$	Reverse Breakdown Voltage Change with Operating Current Change(4)	$I_{RMIN} \le I_R \le$ 1mA	LM4040CIM3 LM4040CIZ	$T_A = T_J$ = 25°C		0.8	1.5	mV
				$T_A = T_J = T_{MIN}$ to T_{MAX}			3.5	
			LM4040DIM3 LM4040DIZ	$T_A = T_J$ = 25°C		0.8	2	
				$T_A = T_J = T_{MIN}$ to T_{MAX}			4	
		1mA $\le I_R \le$ 15mA	LM4040CIM3 LM4040CIZ	$T_A = T_J$ = 25°C		8	12	
				$T_A = T_J = T_{MIN}$ to T_{MAX}			23	
			LM4040DIM3 LM4040DIZ	$T_A = T_J$ = 25°C		8	18	
				$T_A = T_J = T_{MIN}$ to T_{MAX}			29	
Z_R	Reverse Dynamic Impedance	I_R = 1mA, f = 120Hz, I_{AC} = 0.1 I_R	LM4040CIM3 LM4040CIZ			0.7	1.7	Ω
			LM4040DIM3 LM4040DIZ				2.3	
e_N	Wideband Noise	I_R = 150µA 10Hz ≤ f ≤ 10kHz				180		μV_{rms}
ΔV_R	Reverse Breakdown Voltage Long Term Stability	t = 1000 hrs T = 25°C ±0.1°C I_R = 150µA				120		ppm
V_{HYST}	Thermal Hysteresis(5)	ΔT = −40°C to 125°C				0.08%		

(1) Typicals are at T_J = 25°C and represent most likely parametric norm.
(2) Limits are 100% production tested at 25°C. Limits over temperature are verified through correlation using Statistical Quality Control (SQC) methods. The limits are used to calculate AOQL.
(3) The (overtemperature) limit for Reverse Breakdown Voltage Tolerance is defined as the room temperature Reverse Breakdown Voltage Tolerance ±[($\Delta V_R/\Delta T$)(maxΔT)(V_R)]. Where, $\Delta V_R/\Delta T$ is the V_R temperature coefficient, maxΔT is the maximum difference in temperature from the reference point of 25°C to T_{MIN} or T_{MAX}, and V_R is the reverse breakdown voltage. The total overtemperature tolerance for the different grades in the industrial temperature range where maxΔT = 65°C is shown below:
A-grade: ±0.75% = ±0.1% ±100ppm/°C × 65°C
B-grade: ±0.85% = ±0.2% ±100ppm/°C × 65°C
C-grade: ±1.15% = ±0.5% ±100ppm/°C × 65°C
D-grade: ±1.98% = ±1.0% ±150ppm/°C × 65°C
E-grade: ±2.98% = ±2.0% ±150ppm/°C × 65°C
The total overtemperature tolerance for the different grades in the extended temperature range where max ΔT = 100 °C is shown below:
C-grade: ±1.5% = ±0.5% ±100ppm/°C × 100°C
D-grade: ±2.5% = ±1.0% ±150ppm/°C × 100°C
E-grade: ±3.5% = ±2.0% ±150ppm/°C × 100°C

Copyright © 2024 Texas Instruments Incorporated

Therefore, as an example, the A-grade 2.5V LM4040-N has an overtemperature Reverse Breakdown Voltage tolerance of ±2.5V × 0.75% = ±19 mV.

(4) Load regulation is measured on pulse basis from no load to the specified load current. Output changes due to die temperature change must be taken into account separately.

(5) Thermal hysteresis is defined as the difference in voltage measured at +25°C after cycling to temperature -40°C and the 25°C measurement after cycling to temperature 125°C.

Copyright © 2024 Texas Instruments Incorporated

5.23 Typical Characteristics

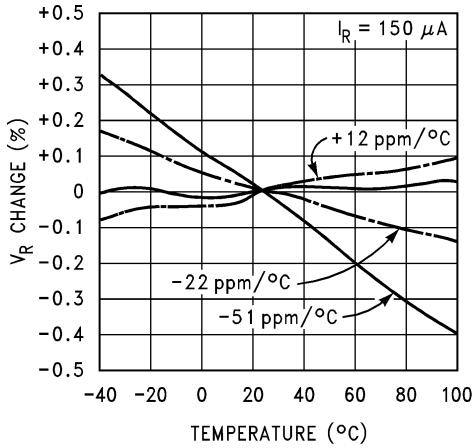

Figure 5-1. Temperature Drift For Different Average Temperature Coefficient

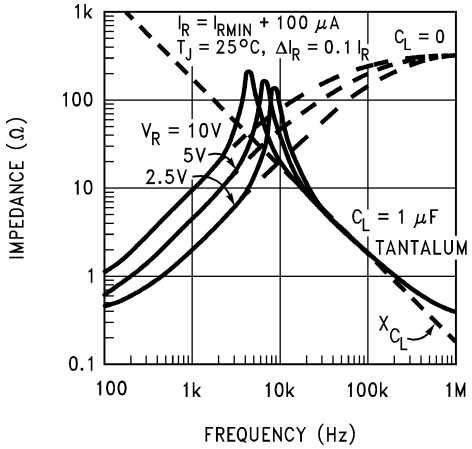

Figure 5-2. Output Impedance vs Frequency

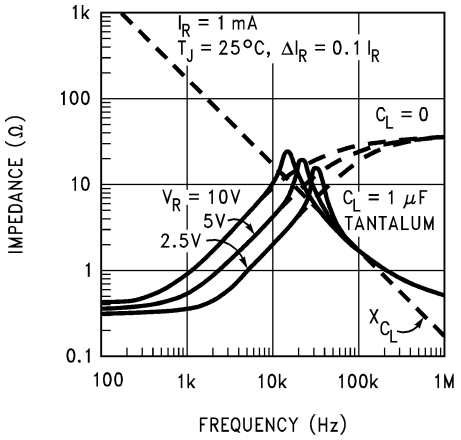

Figure 5-3. Output Impedance vs Frequency

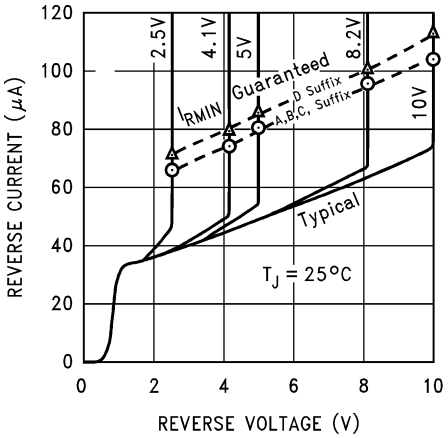

Figure 5-4. Reverse Characteristics And Minimum Operating Current

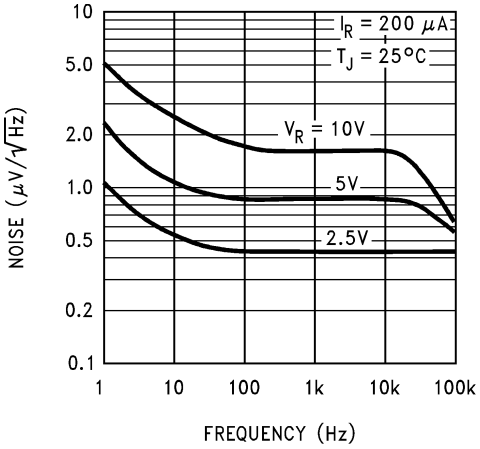

Figure 5-5. Noise Voltage vs Frequency

5.23.1 Start-Up Characteristics

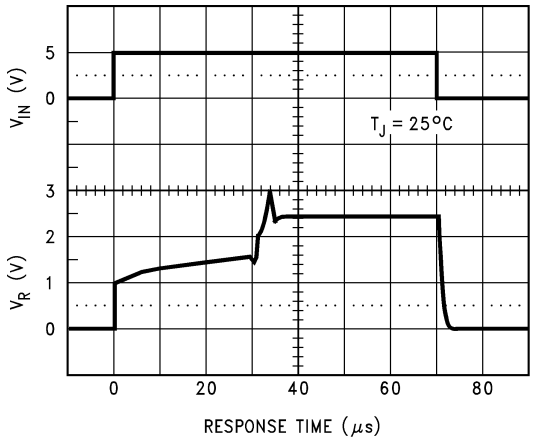

R_S = 30k

Figure 5-6. Input Voltage Step Response LM4040-N-2.5

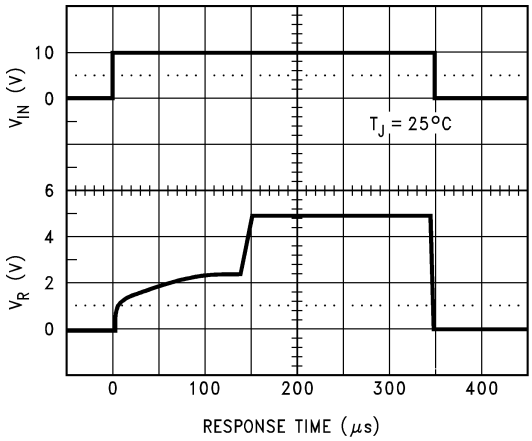

R_S = 30k

Figure 5-7. Input Voltage Step Response LM4040-N-5

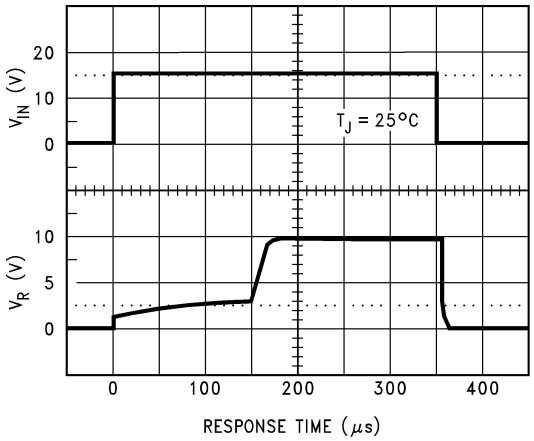

R_S = 30k

Figure 5-8. Input Voltage Step Response LM4040-N-10

Copyright © 2024 Texas Instruments Incorporated

6 Parameter Measurement Information

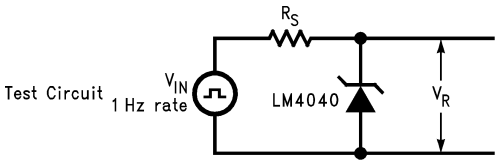

Figure 6-1. Test Circuit

7 Detailed Description

7.1 Overview

The LM4040 device is a precision micropower shunt voltage reference available in 7 different fixed-output voltage options and three different packages to meet small footprint requirements. The part is also available in five different tolerance grades.

7.2 Functional Block Diagram

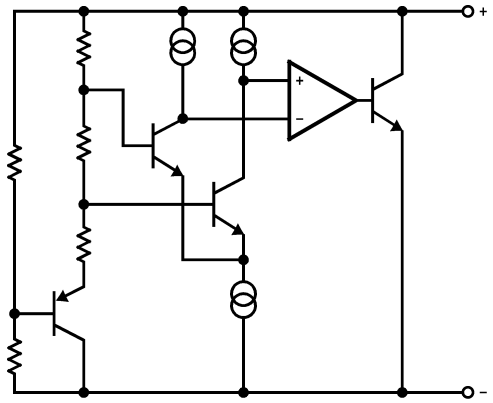

7.3 Feature Description

The LM4040 device is effectively a precision Zener diode. The part requires a small quiescent current for regulation, and regulates the output voltage by shunting more or less current to ground, depending on input voltage and load. The only external component requirement is a resistor between the cathode and the input voltage to set the input current. An external capacitor can be used on the input or output, but is not required.

7.4 Device Functional Modes

The LM4040 device is a fixed output voltage part, where the feedback is internal. Therefore, the part can only operate is a closed loop mode and the output voltage cannot be adjusted. The output voltage will remain in regulation as long as I_R is between I_{RMIN}, see *Section 5.5*, and I_{RMAX}, 15mA. Proper selection of the external resistor for input voltage range and load current range will ensure these conditions are met.

Copyright © 2024 Texas Instruments Incorporated

8 Application and Implementation

Note

Information in the following applications sections is not part of the TI component specification, and TI does not warrant its accuracy or completeness. TI's customers are responsible for determining suitability of components for their purposes, as well as validating and testing their design implementation to confirm system functionality.

8.1 Application Information

The LM4040-N is a precision micropower curvature-corrected bandgap shunt voltage reference. For space critical applications, the LM4040-N is available in SOT-23 and SC70 surface-mount packages. The LM4040-N has been designed for stable operation without the need of an external capacitor connected between the + pin and the − pin. If, however, a bypass capacitor is used, the LM4040-N remains stable. Reducing design effort is the availability of several fixed reverse breakdown voltages: 2.048V, 2.5V, 3V, 4.096V, 5V, 8.192V, and 10V. The minimum operating current increases from 60µA for the LM4040-N-2.048 and LM4040-N-2.5 to 100µA for the 10V LM4040-N. All versions have a maximum operating current of 15mA.

LM4040-Ns in the SOT-23 packages have a parasitic Schottky diode between pin 2 (−) and pin 3 (Die attach interface contact). Therefore, pin 3 of the SOT-23 package must be left floating or connected to pin 2.

LM4040-Ns in the SC70 have a parasitic Schottky diode between pin 1 (−) and pin 2 (Die attach interface contact). Therefore, pin 2 must be left floating or connected to pin1.

The 4.096V version allows single 5V 12-bit ADCs or DACs to operate with an LSB equal to 1mV. For 12-bit ADCs or DACs that operate on supplies of 10V or greater, the 8.192V version gives 2mV per LSB.

The typical thermal hysteresis specification is defined as the change in 25°C voltage measured after thermal cycling. The device is thermal cycled to temperature –40°C and then measured at 25°C. Next the device is thermal cycled to temperature 125°C and again measured at 25°C. The resulting V_{OUT} delta shift between the 25°C measurements is thermal hysteresis. Thermal hysteresis is common in precision references and is induced by thermal-mechanical package stress. Changes in environmental storage temperature, operating temperature and board mounting temperature are all factors that can contribute to thermal hysteresis.

In a conventional shunt regulator application (Figure 8-1) , an external series resistor (R_S) is connected between the supply voltage and the LM4040-N. R_S determines the current that flows through the load (I_L) and the LM4040-N (I_Q). Since load current and supply voltage may vary, R_S must be small enough to supply at least the minimum acceptable I_Q to the LM4040-N even when the supply voltage is at its minimum and the load current is at its maximum value. When the supply voltage is at its maximum and I_L is at its minimum, R_S must be large enough so that the current flowing through the LM4040-N is less than 15mA.

R_S is determined by the supply voltage, (V_S), the load and operating current, (I_L and I_Q), and the LM4040-N's reverse breakdown voltage, V_R.

$$R_S = \frac{V_S - V_R}{I_L + I_Q} \tag{1}$$

8.2 Typical Applications

8.2.1 Shunt Regulator

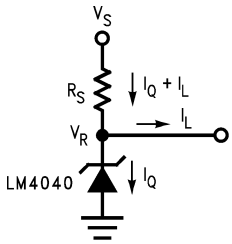

Figure 8-1. Shunt Regulator Schematic

Copyright © 2024 Texas Instruments Incorporated

8.2.1.1 Design Requirements

$V_{IN} > V_{OUT}$

Select R_S such that:

$I_{RMIN} < I_R < I_{RMAX}$ where I_{RMAX} = 15mA

See *Section 5.5*
for minimum operating current for each voltage option and grade.

8.2.1.2 Detailed Design Procedure

The resistor R_S must be selected such that current IR will remain in the operational region of the part for the entire V_{IN} range and load current range. The two extremes to consider are V_{IN} at its minimum, and the load at its maximum, where R_S must be small enough for I_R to remain above I_{RMIN}. The other extreme is V_{IN} at its maximum, and the load at its minimum, where R_S must be large enough to maintain $I_R < I_{RMAX}$. For most designs, 0.1mA ≤ I_R ≤ 1mA is a good starting point.

Use Equation 2 and Equation 3 to set R_S between R_{S_MIN} and R_{S_MAX}.

$$R_{S_MIN} = \frac{V_{IN_MAX} - V_{OUT}}{I_{LOAD_MIN} + I_{R_MAX}} \tag{2}$$

$$R_{S_MAX} = \frac{V_{IN_MIN} - V_{OUT}}{I_{LOAD_MAX} + I_{R_MIN}} \tag{3}$$

8.2.1.3 Application Curve

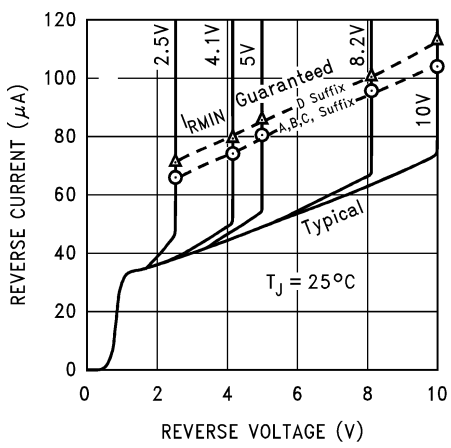

Figure 8-2. Reverse Characteristics And Minimum Operating Current

8.2.2 4.1V ADC Application

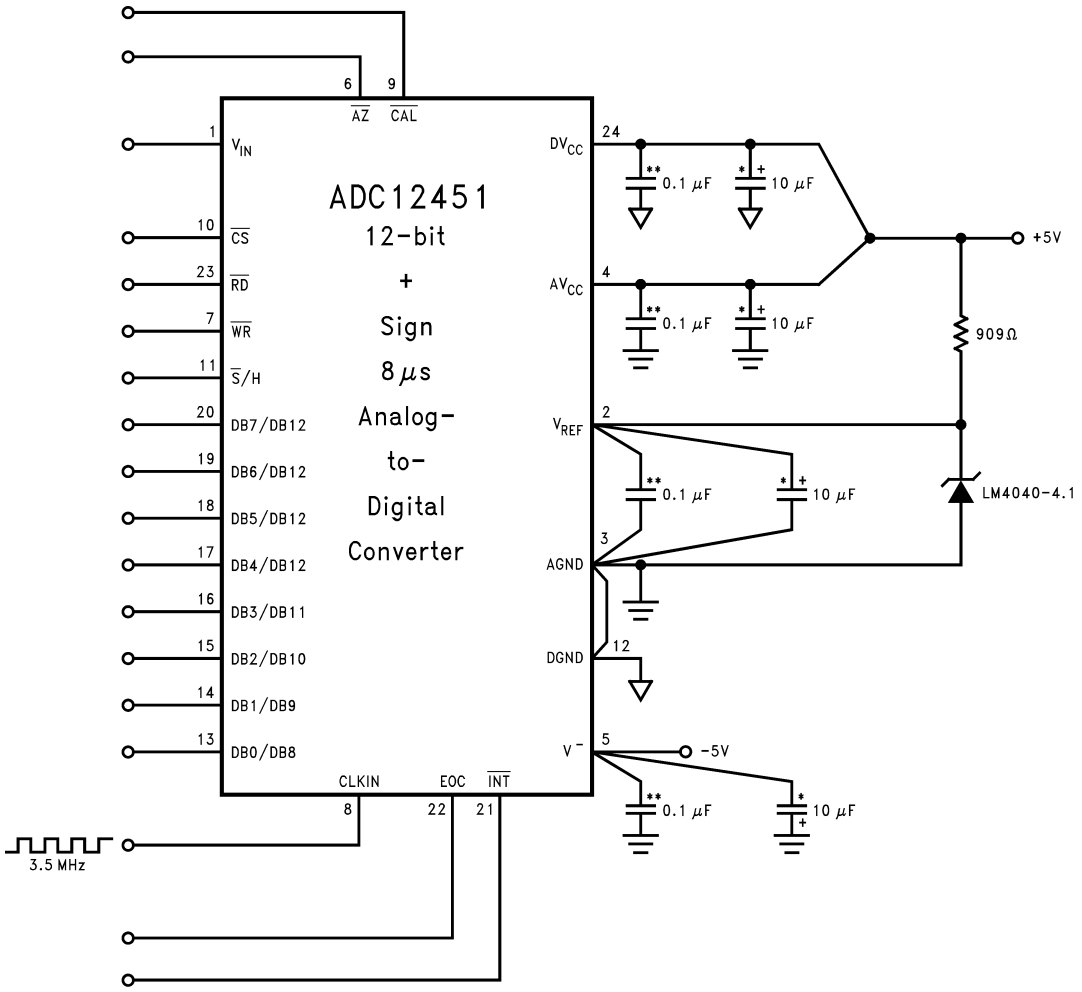

**Ceramic monolithic *Tantalum

Figure 8-3. 4.1V LM4040-N'S Nominal 4.096 Breakdown Voltage Gives ADC12451 1 MV/LSB

8.2.2.1 Design Requirements

The only design requirement is for an output voltage of 4.096V.

8.2.2.2 Detailed Design Procedure

Using an LM4040-4.1, select an appropriate R_S to sufficiently power the device. Set the target I_R for 1mA. With an input voltage of 5V, the resistor can be calculated:

$$R = \frac{5\ V - 4.096\ V}{1\,mA} = 904\ \Omega \tag{4}$$

The closest available resistance of 909 Ω is used here, which in turn yields an I_R of 994μA.

Copyright © 2024 Texas Instruments Incorporated

8.2.3 Bounded Amplifier

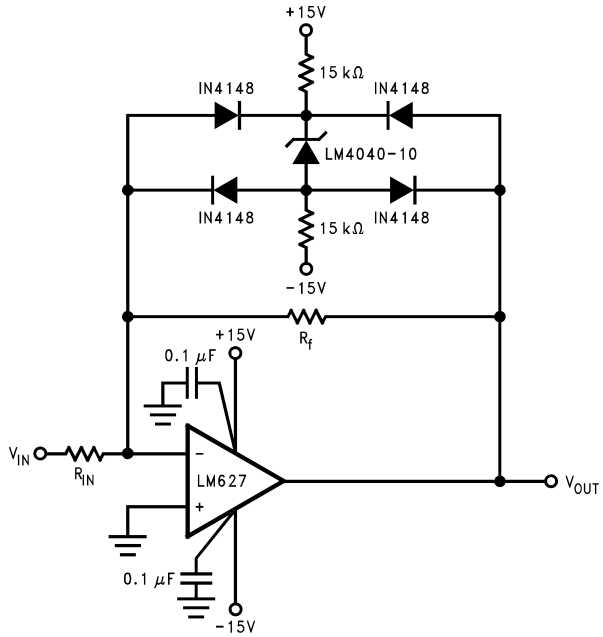

Nominal clamping voltage is ±11.5V (LM4040-N's reverse breakdown voltage +2 diode V_F).

Figure 8-4. Bounded Amplifier Reduces Saturation-Induced Delays and Can Prevent Succeeding Stage Damage

8.2.3.1 Design Requirements

Design an amplifier with output clamped at ±11.5V.

8.2.3.2 Detailed Design Procedure

With amplifier rails of ±15V, the output can be bound to ±11.5V with the LM4040-10 and two nominal diode voltage drops of 0.7V.

$$V_{OUTBound} = 2 \times VFWD + VZ \quad (5)$$

$$V_{OUTBound} = 1.4V + 10V \quad (6)$$

Select R_S = 15kΩ to keep I_R low. Calculate I_R to confirm RS selection.

$$I_R = (V_{IN} – V_{OUT}) / R, \text{ however in this case, the negative supply must be taken into account.} \quad (7)$$

$$I_R = (V_{IN+} – V_{IN-} – V_{OUT})/R = (30V – 10V) / (R_{S1}+R_{S2}) = 20V / 30k\Omega = 0.667mA \quad (8)$$

This is an acceptable value for I_R that does not draw excessive current, but prevents the part from being starved for current.

8.2.4 Protecting Op-Amp Input

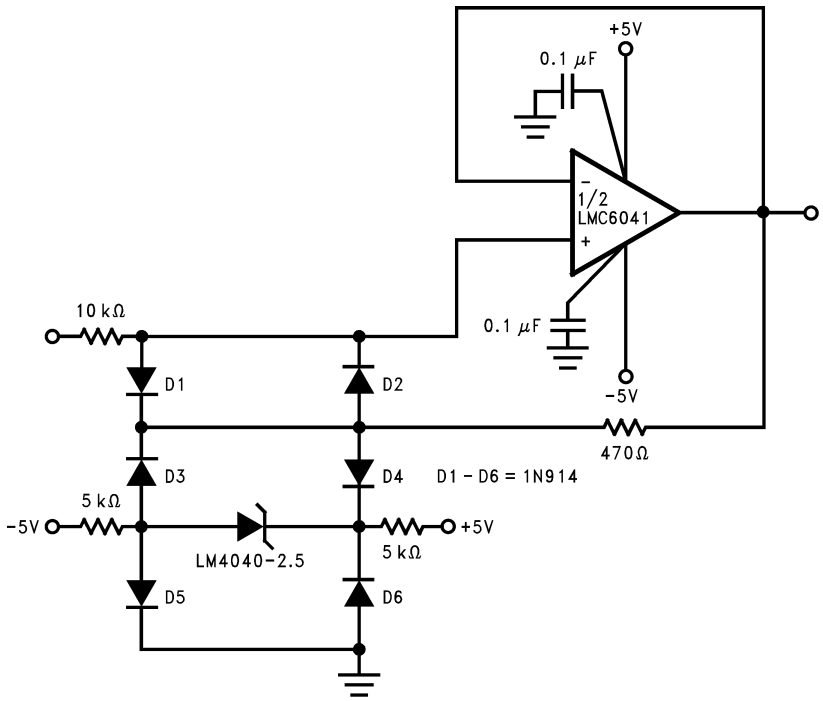

The bounding voltage is ±4 V with the 2.5V LM4040-N (LM4040-N's reverse breakdown voltage + 3 diode V_F).

Figure 8-5. Protecting Op Amp Input

8.2.4.1 Design Requirements

Limit the input voltage to the op-amp to ±4 V.

8.2.4.2 Detailed Design Procedure

Similar to *Section 8.2.3*, this design uses a LM4040-2.5 and three forward diode voltage drops to create a voltage clamp. The procedure for selecting the R_S resistors, in this case 5kΩ, is the same as *Section 8.2.3.2*.

$$I_R = (V_{IN+} – V_{IN-} – V_{OUT}) / R = (10V – 2.5V) / (R_{S1} + R_{S2}) = 7.5V / 10k\Omega = 0.750mA \quad (9)$$

Copyright © 2024 Texas Instruments Incorporated

8.2.5 Precision ±4.096-V Reference

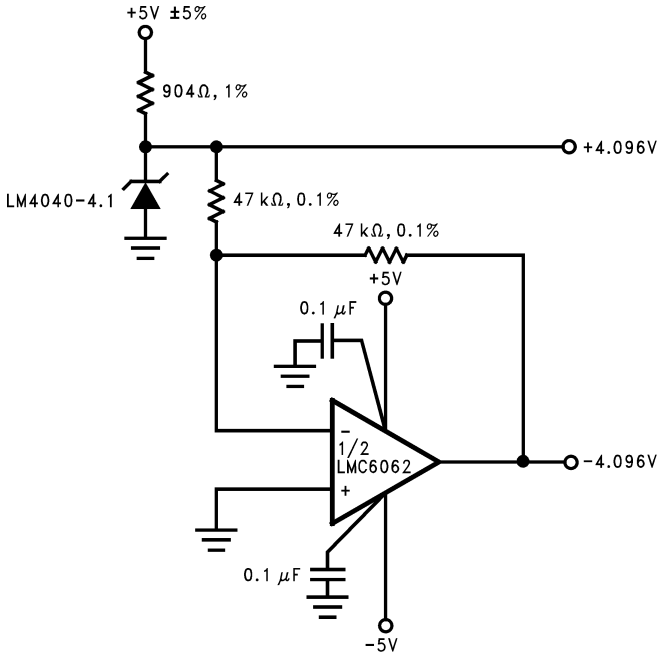

Figure 8-6. Precision ±4.096-V Reference

8.2.5.1 Design Requirements

Use a single voltage reference to create positive and negative reference rails, ±4.096V.

8.2.5.2 Detailed Design Procedure

The procedure for selecting the R_S resistor is same as detailed in *Section 8.2.2.2*. The output of the voltage reference is used as the inverting input to the op-amp, with unity gain.

8.2.6 Precision Current Sink/Source

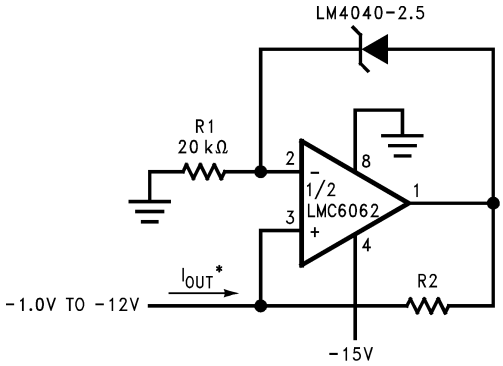

Figure 8-7. Precision 1mA Current Sink

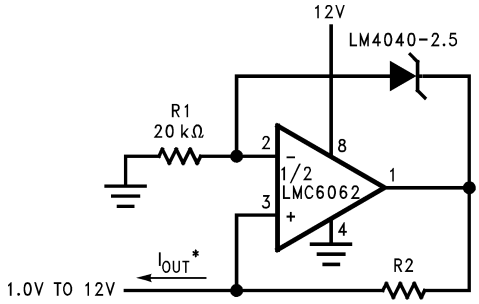

Figure 8-8. Precision 1mA Current Source

8.2.6.1 Design Requirements

Create precision 1mA current sink and/or 1mA current source.

8.2.6.2 Detailed Design Procedure

Set R1 such that the current through the shunt reference, I_R, is greater than I_{RMIN}.

$I_{OUT} = V_{OUT} / R_2$ where V_{OUT} is the voltage drop across the shunt reference. In this case,

$I_{OUT} = 2.5 / R_2$

8.3 Power Supply Recommendations

While a bypass capacitor is not required on the input voltage line, TI recommends reducing noise on the input which could affect the output. A 0.1µF ceramic capacitor or larger is recommended.

8.4 Layout

8.4.1 Layout Guidelines

Place external components as close to the device as possible. Place RS close the cathode, as well as the input bypass capacitor, if used.

Copyright © 2024 Texas Instruments Incorporated

8.4.2 Layout Example

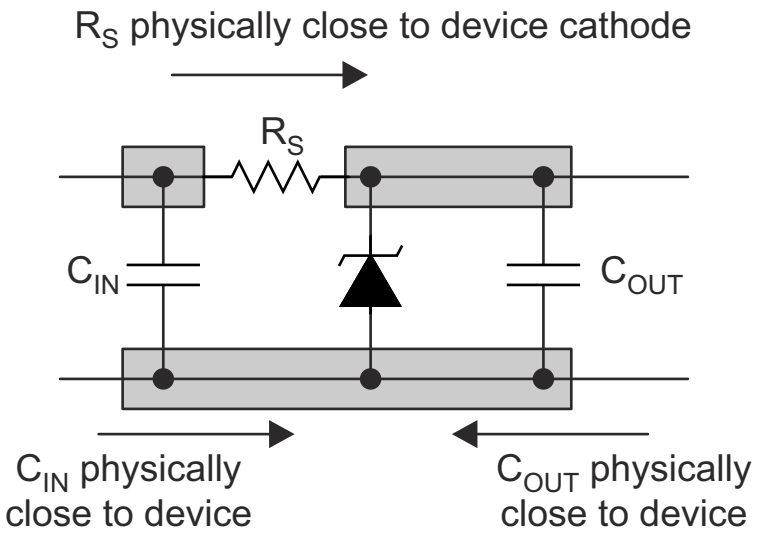

Figure 8-9. Layout Diagram

9 Device and Documentation Support

9.1 Documentation Support

9.1.1 Related Documentation

For related documentation, see the following:

- *Absolute Maximum Ratings for Soldering Application Report* (SNOA549)
- *LM4041-N/LM4041-N-Q1 Precision Micropower Shunt Voltage Reference* (SNOS641)

9.2 Related Links

The table below lists quick access links. Categories include technical documents, support and community resources, tools and software, and quick access to order now.

Table 9-1. Related Links

PARTS	PRODUCT FOLDER	ORDER NOW	TECHNICAL DOCUMENTS	TOOLS & SOFTWARE	SUPPORT & COMMUNITY
LM4040-N	Click here	Click here	Click here	Click here	Click here
LM4040-N-Q1	Click here	Click here	Click here	Click here	Click here

9.3 Receiving Notification of Documentation Updates

To receive notification of documentation updates, navigate to the device product folder on ti.com. Click on *Notifications* to register and receive a weekly digest of any product information that has changed. For change details, review the revision history included in any revised document.

9.4 Support Resources

TI E2E™ support forums are an engineer's go-to source for fast, verified answers and design help — straight from the experts. Search existing answers or ask your own question to get the quick design help you need.

Linked content is provided "AS IS" by the respective contributors. They do not constitute TI specifications and do not necessarily reflect TI's views; see TI's Terms of Use.

9.5 Trademarks

TI E2E™ is a trademark of Texas Instruments.
All trademarks are the property of their respective owners.

9.6 Electrostatic Discharge Caution

This integrated circuit can be damaged by ESD. Texas Instruments recommends that all integrated circuits be handled with appropriate precautions. Failure to observe proper handling and installation procedures can cause damage.

ESD damage can range from subtle performance degradation to complete device failure. Precision integrated circuits may be more susceptible to damage because very small parametric changes could cause the device not to meet its published specifications.

9.7 Glossary

TI Glossary — This glossary lists and explains terms, acronyms, and definitions.

Copyright © 2024 Texas Instruments Incorporated

10 Revision History

NOTE: Page numbers for previous revisions may differ from page numbers in the current version.

Changes from Revision K (June 2016) to Revision L (June 2024) **Page**

- Updated the numbering format for tables, figures, and cross-references throughout the document..... 1
- Updated pinout diagrams..... 3
- Removed soldering information from the *Absolute Maximum Ratings* table 4

Changes from Revision J (August 2015) to Revision K (June 2016) **Page**

- Updated pinout diagrams 3

Changes from Revision I (April 2015) to Revision J (August 2015) **Page**

- Added *ESD Ratings* table, *Feature Description* section, *Device Functional Modes* section, *Application and Implementation* section, *Power Supply Recommendations* section, *Layout* section, *Device and Documentation Support* section, and *Mechanical, Packaging, and Orderable Information* section 1

Changes from Revision H (April 2013) to Revision I (April 2015) **Page**

- Added some of the latest inclusions from new TI formatting and made available of the automotive grade for the SOT-23 package.....1

Changes from Revision G (July 2012) to Revision H (April 2013) **Page**

- Changed layout of National Data Sheet to TI format.....1

11 Mechanical, Packaging, And Orderable Information

The following pages include mechanical, packaging, and orderable information. This information is the most current data available for the designated devices. This data is subject to change without notice and revision of this document. For browser-based versions of this data sheet, refer to the left-hand navigation.

11.1 SOT-23 and SC70 Package Marking Information

Only three fields of marking are possible on the SOT-23's and SC70's small surface. This table gives the meaning of the three fields.

First Field:

R = Reference

Second Field: Voltage Option

J = 2.048V Voltage Option

2 = 2.5V Voltage Option

K = 3V Voltage Option

4 = 4.096V Voltage Option

5 = 5V Voltage Option

8 = 8.192V Voltage Option

0 = 10V Voltage Option

Third Field: Initial Reverse Breakdown Voltage or Reference Voltage Tolerance

A = ±0.1%

B = ±0.2%

C = +0.5%

D = ±1.0%

E = ±2.0%

PART MARKING	FIELD DEFINITION
RJA (SOT-23 only)	Reference, 2.048V, ±0.1%
R2A (SOT-23 only)	Reference, 2.5V, ±0.1%
RKA (SOT-23 only)	Reference, 3V, ±0.1%
R4A (SOT-23 only)	Reference, 4.096V, ±0.1%
R5A (SOT-23 only)	Reference, 5V, ±0.1%
R8A (SOT-23 only)	Reference, 8.192V, ±0.1%
R0A (SOT-23 only)	Reference, 10V, ±0.1%
RJB	Reference, 2.048V, ±0.2%
R2B	Reference, 2.5V, ±0.2%
RKB	Reference, 3V, ±0.2%
R4B	Reference, 4.096V, ±0.2%
R5B	Reference, 5V, ±0.2%
R8B (SOT-23 only)	Reference, 8.192V, ±0.2%
R0B (SOT-23 only)	Reference, 10V, ±0.2%
RJC	Reference, 2.048V, ±0.5%
R2C	Reference, 2.5V, ±0.5%
RKC	Reference, 3V, ±0.5%

Copyright © 2024 Texas Instruments Incorporated

PART MARKING	FIELD DEFINITION
R4C	Reference, 4.096V, ±0.5%
R5C	Reference, 5V, ±0.5%
R8C (SOT-23 only)	Reference, 8.192V, ±0.5%
R0C (SOT-23 only)	Reference, 10V, ±0.5%
RJD	Reference, 2.048V, ±1.0%
R2D	Reference, 2.5V, ±1.0%
RKD	Reference, 3V, ±1.0%
R4D	Reference, 4.096V, ±1.0%
R5D	Reference, 5V, ±1.0%
R8D (SOT-23 only)	Reference, 8.192V, ±1.0%
R0D (SOT-23 only)	Reference, 10V, ±1.0%
RJE	Reference, 2.048V, ±2.0%
R2E	Reference, 2.5V, ±2.0%
RKE	Reference, 3V, ±2.0%

Copyright © 2024 Texas Instruments Incorporated

PACKAGING INFORMATION

Orderable Device	Status (1)	Package Type	Package Drawing	Pins	Package Qty	Eco Plan (2)	Lead finish/ Ball material (6)	MSL Peak Temp (3)	Op Temp (°C)	Device Marking (4/5)	Samples
LM4040AIM3-10.0/NOPB	ACTIVE	SOT-23	DBZ	3	3000	RoHS & Green	SN	Level-1-260C-UNLIM	-40 to 85	R0A	Samples
LM4040AIM3-2.0/NOPB	ACTIVE	SOT-23	DBZ	3	3000	RoHS & Green	NIPDAU | SN	Level-1-260C-UNLIM		RJA	Samples
LM4040AIM3-2.5/NOPB	ACTIVE	SOT-23	DBZ	3	3000	RoHS & Green	NIPDAU | SN	Level-1-260C-UNLIM		R2A	Samples
LM4040AIM3-3.0/NOPB	ACTIVE	SOT-23	DBZ	3	3000	RoHS & Green	NIPDAU	Level-1-260C-UNLIM		RKA	Samples
LM4040AIM3-4.1/NOPB	ACTIVE	SOT-23	DBZ	3	3000	RoHS & Green	NIPDAU	Level-1-260C-UNLIM		R4A	Samples
LM4040AIM3-5.0/NOPB	ACTIVE	SOT-23	DBZ	3	3000	RoHS & Green	NIPDAU | SN	Level-1-260C-UNLIM		R5A	Samples
LM4040AIM3X-10/NOPB	ACTIVE	SOT-23	DBZ	3	3000	RoHS & Green	SN	Level-1-260C-UNLIM		R0A	Samples
LM4040AIM3X-2.0/NOPB	ACTIVE	SOT-23	DBZ	3	3000	RoHS & Green	NIPDAU | SN	Level-1-260C-UNLIM		RJA	Samples
LM4040AIM3X-2.5/NOPB	ACTIVE	SOT-23	DBZ	3	3000	RoHS & Green	NIPDAU	Level-1-260C-UNLIM		R2A	Samples
LM4040AIM3X-3.0/NOPB	ACTIVE	SOT-23	DBZ	3	3000	RoHS & Green	NIPDAU | SN	Level-1-260C-UNLIM		RKA	Samples
LM4040AIM3X-4.1/NOPB	ACTIVE	SOT-23	DBZ	3	3000	RoHS & Green	NIPDAU | SN	Level-1-260C-UNLIM		R4A	Samples
LM4040AIM3X-5.0/NOPB	ACTIVE	SOT-23	DBZ	3	3000	RoHS & Green	NIPDAU | SN	Level-1-260C-UNLIM		R5A	Samples
LM4040AIZ-10.0/NOPB	ACTIVE	TO-92	LP	3	1800	RoHS & Green	Call TI	N / A for Pkg Type		4040A IZ10	Samples
LM4040AIZ-2.5/NOPB	ACTIVE	TO-92	LP	3	1800	RoHS & Green	Call TI	N / A for Pkg Type		4040A IZ2.5	Samples
LM4040AIZ-4.1/NOPB	ACTIVE	TO-92	LP	3	1800	RoHS & Green	Call TI	N / A for Pkg Type		4040A IZ4.1	Samples
LM4040AIZ-5.0/NOPB	ACTIVE	TO-92	LP	3	1800	RoHS & Green	Call TI	N / A for Pkg Type		4040A IZ5.0	Samples
LM4040BIM3-10.0/NOPB	ACTIVE	SOT-23	DBZ	3	3000	RoHS & Green	SN	Level-1-260C-UNLIM		R0B	Samples
LM4040BIM3-2.0/NOPB	ACTIVE	SOT-23	DBZ	3	3000	RoHS & Green	NIPDAU	Level-1-260C-UNLIM		RJB	Samples
LM4040BIM3-2.5	OBSOLETE	SOT-23	DBZ	3		TBD	Call TI	Call TI		R2B	

Orderable Device	Status (1)	Package Type	Package Drawing	Pins	Package Qty	Eco Plan (2)	Lead finish/ Ball material (6)	MSL Peak Temp (3)	Op Temp (°C)	Device Marking (4/5)	Samples
LM4040BIM3-2.5/NOPB	ACTIVE	SOT-23	DBZ	3	3000	RoHS & Green	NIPDAU	Level-1-260C-UNLIM		R2B	Samples
LM4040BIM3-3.0/NOPB	ACTIVE	SOT-23	DBZ	3	3000	RoHS & Green	NIPDAU	Level-1-260C-UNLIM		RKB	Samples
LM4040BIM3-4.1/NOPB	ACTIVE	SOT-23	DBZ	3	3000	RoHS & Green	NIPDAU	Level-1-260C-UNLIM		R4B	Samples
LM4040BIM3-5.0/NOPB	ACTIVE	SOT-23	DBZ	3	3000	RoHS & Green	NIPDAU	Level-1-260C-UNLIM		R5B	Samples
LM4040BIM3-8.2/NOPB	ACTIVE	SOT-23	DBZ	3	3000	RoHS & Green	SN	Level-1-260C-UNLIM		R8B	Samples
LM4040BIM3X-10/NOPB	ACTIVE	SOT-23	DBZ	3	3000	RoHS & Green	SN	Level-1-260C-UNLIM		R0B	Samples
LM4040BIM3X-2.0/NOPB	ACTIVE	SOT-23	DBZ	3	3000	RoHS & Green	NIPDAU	Level-1-260C-UNLIM		RJB	Samples
LM4040BIM3X-2.5/NOPB	ACTIVE	SOT-23	DBZ	3	3000	RoHS & Green	NIPDAU	Level-1-260C-UNLIM		R2B	Samples
LM4040BIM3X-3.0/NOPB	ACTIVE	SOT-23	DBZ	3	3000	RoHS & Green	NIPDAU	Level-1-260C-UNLIM		RKB	Samples
LM4040BIM3X-4.1/NOPB	ACTIVE	SOT-23	DBZ	3	3000	RoHS & Green	NIPDAU	Level-1-260C-UNLIM		R4B	Samples
LM4040BIM3X-5.0/NOPB	ACTIVE	SOT-23	DBZ	3	3000	RoHS & Green	NIPDAU	Level-1-260C-UNLIM		R5B	Samples
LM4040BIM7-2.0/NOPB	ACTIVE	SC70	DCK	5	3000	RoHS & Green	SN	Level-1-260C-UNLIM		RJB	Samples
LM4040BIM7-2.5/NOPB	ACTIVE	SC70	DCK	5	3000	RoHS & Green	SN	Level-1-260C-UNLIM		R2B	Samples
LM4040BIM7-5.0/NOPB	ACTIVE	SC70	DCK	5	3000	RoHS & Green	SN	Level-1-260C-UNLIM		R5B	Samples
LM4040BIM7X-2.5/NOPB	ACTIVE	SC70	DCK	5	3000	RoHS & Green	SN	Level-1-260C-UNLIM		R2B	Samples
LM4040BIZ-10.0/NOPB	ACTIVE	TO-92	LP	3	1800	RoHS & Green	Call TI	N / A for Pkg Type		4040B IZ10	Samples
LM4040BIZ-2.5/NOPB	ACTIVE	TO-92	LP	3	1800	RoHS & Green	Call TI	N / A for Pkg Type		4040B IZ2.5	Samples
LM4040BIZ-4.1/NOPB	ACTIVE	TO-92	LP	3	1800	RoHS & Green	Call TI	N / A for Pkg Type		4040B IZ4.1	Samples
LM4040BIZ-5.0/NOPB	ACTIVE	TO-92	LP	3	1800	RoHS & Green	Call TI	N / A for Pkg Type		4040B IZ5.0	Samples
LM4040CEM3-2.5/NOPB	ACTIVE	SOT-23	DBZ	3	3000	RoHS & Green	NIPDAU	Level-1-260C-UNLIM		R2C	Samples

Orderable Device	Status (1)	Package Type	Package Drawing	Pins	Package Qty	Eco Plan (2)	Lead finish/ Ball material (6)	MSL Peak Temp (3)	Op Temp (°C)	Device Marking (4/5)	Samples
LM4040CEM3-3.0/NOPB	ACTIVE	SOT-23	DBZ	3	3000	RoHS & Green	NIPDAU	Level-1-260C-UNLIM		RKC	Samples
LM4040CEM3-5.0/NOPB	ACTIVE	SOT-23	DBZ	3	3000	RoHS & Green	NIPDAU	Level-1-260C-UNLIM		R5C	Samples
LM4040CEM3X-3.0/NOPB	ACTIVE	SOT-23	DBZ	3	3000	RoHS & Green	NIPDAU	Level-1-260C-UNLIM		RKC	Samples
LM4040CEM3X-5.0/NOPB	ACTIVE	SOT-23	DBZ	3	3000	RoHS & Green	NIPDAU	Level-1-260C-UNLIM		R5C	Samples
LM4040CIM3-10.0/NOPB	ACTIVE	SOT-23	DBZ	3	3000	RoHS & Green	SN	Level-1-260C-UNLIM		R0C	Samples
LM4040CIM3-2.0/NOPB	ACTIVE	SOT-23	DBZ	3	3000	RoHS & Green	NIPDAU	Level-1-260C-UNLIM		RJC	Samples
LM4040CIM3-2.5/NOPB	ACTIVE	SOT-23	DBZ	3	3000	RoHS & Green	NIPDAU | SN	Level-1-260C-UNLIM		R2C	Samples
LM4040CIM3-3.0/NOPB	ACTIVE	SOT-23	DBZ	3	3000	RoHS & Green	NIPDAU	Level-1-260C-UNLIM		RKC	Samples
LM4040CIM3-4.1/NOPB	ACTIVE	SOT-23	DBZ	3	3000	RoHS & Green	NIPDAU	Level-1-260C-UNLIM		R4C	Samples
LM4040CIM3-5.0/NOPB	ACTIVE	SOT-23	DBZ	3	3000	RoHS & Green	NIPDAU	Level-1-260C-UNLIM		R5C	Samples
LM4040CIM3-8.2/NOPB	ACTIVE	SOT-23	DBZ	3	3000	RoHS & Green	SN	Level-1-260C-UNLIM		R8C	Samples
LM4040CIM3X-10/NOPB	ACTIVE	SOT-23	DBZ	3	3000	RoHS & Green	SN	Level-1-260C-UNLIM		R0C	Samples
LM4040CIM3X-2.0/NOPB	ACTIVE	SOT-23	DBZ	3	3000	RoHS & Green	NIPDAU	Level-1-260C-UNLIM		RJC	Samples
LM4040CIM3X-2.5/NOPB	ACTIVE	SOT-23	DBZ	3	3000	RoHS & Green	NIPDAU	Level-1-260C-UNLIM		R2C	Samples
LM4040CIM3X-3.0/NOPB	ACTIVE	SOT-23	DBZ	3	3000	RoHS & Green	NIPDAU	Level-1-260C-UNLIM		RKC	Samples
LM4040CIM3X-4.1/NOPB	ACTIVE	SOT-23	DBZ	3	3000	RoHS & Green	NIPDAU	Level-1-260C-UNLIM		R4C	Samples
LM4040CIM3X-5.0/NOPB	ACTIVE	SOT-23	DBZ	3	3000	RoHS & Green	NIPDAU	Level-1-260C-UNLIM		R5C	Samples
LM4040CIM7-2.0/NOPB	ACTIVE	SC70	DCK	5	3000	RoHS & Green	SN	Level-1-260C-UNLIM		RJC	Samples
LM4040CIM7-2.5/NOPB	ACTIVE	SC70	DCK	5	3000	RoHS & Green	SN	Level-1-260C-UNLIM		R2C	Samples
LM4040CIM7X-2.5/NOPB	ACTIVE	SC70	DCK	5	3000	RoHS & Green	SN	Level-1-260C-UNLIM		R2C	Samples
LM4040CIZ-10.0/NOPB	ACTIVE	TO-92	LP	3	1800	RoHS & Green	Call TI	N / A for Pkg Type		4040C IZ10	Samples

Orderable Device	Status (1)	Package Type	Package Drawing	Pins	Package Qty	Eco Plan (2)	Lead finish/ Ball material (6)	MSL Peak Temp (3)	Op Temp (°C)	Device Marking (4/5)	Samples
LM4040CIZ-2.5/LFT8	ACTIVE	TO-92	LP	3	2000	RoHS & Green	Call TI	N / A for Pkg Type		4040C IZ2.5	Samples
LM4040CIZ-2.5/NOPB	ACTIVE	TO-92	LP	3	1800	RoHS & Green	Call TI	N / A for Pkg Type		4040C IZ2.5	Samples
LM4040CIZ-4.1/NOPB	ACTIVE	TO-92	LP	3	1800	RoHS & Green	Call TI	N / A for Pkg Type		4040C IZ4.1	Samples
LM4040CIZ-5.0/NOPB	ACTIVE	TO-92	LP	3	1800	RoHS & Green	Call TI	N / A for Pkg Type		4040C IZ5.0	Samples
LM4040DEM3-2.0/NOPB	ACTIVE	SOT-23	DBZ	3	3000	RoHS & Green	NIPDAU	Level-1-260C-UNLIM		RJD	Samples
LM4040DEM3-2.5/NOPB	ACTIVE	SOT-23	DBZ	3	3000	RoHS & Green	NIPDAU | SN	Level-1-260C-UNLIM		R2D	Samples
LM4040DEM3-3.0/NOPB	ACTIVE	SOT-23	DBZ	3	3000	RoHS & Green	NIPDAU	Level-1-260C-UNLIM		RKD	Samples
LM4040DEM3-5.0/NOPB	ACTIVE	SOT-23	DBZ	3	3000	RoHS & Green	NIPDAU	Level-1-260C-UNLIM		R5D	Samples
LM4040DEM3X-2.5/NOPB	ACTIVE	SOT-23	DBZ	3	3000	RoHS & Green	NIPDAU | SN	Level-1-260C-UNLIM		R2D	Samples
LM4040DEM3X-5.0/NOPB	ACTIVE	SOT-23	DBZ	3	3000	RoHS & Green	NIPDAU	Level-1-260C-UNLIM		R5D	Samples
LM4040DIM3-10.0/NOPB	ACTIVE	SOT-23	DBZ	3	3000	RoHS & Green	SN	Level-1-260C-UNLIM		R0D	Samples
LM4040DIM3-2.0/NOPB	ACTIVE	SOT-23	DBZ	3	3000	RoHS & Green	NIPDAU	Level-1-260C-UNLIM		RJD	Samples
LM4040DIM3-2.5/NOPB	ACTIVE	SOT-23	DBZ	3	3000	RoHS & Green	NIPDAU | SN	Level-1-260C-UNLIM		R2D	Samples
LM4040DIM3-3.0/NOPB	ACTIVE	SOT-23	DBZ	3	3000	RoHS & Green	NIPDAU	Level-1-260C-UNLIM		RKD	Samples
LM4040DIM3-4.1/NOPB	ACTIVE	SOT-23	DBZ	3	3000	RoHS & Green	NIPDAU	Level-1-260C-UNLIM		R4D	Samples
LM4040DIM3-5.0/NOPB	ACTIVE	SOT-23	DBZ	3	3000	RoHS & Green	NIPDAU	Level-1-260C-UNLIM		R5D	Samples
LM4040DIM3-8.2/NOPB	ACTIVE	SOT-23	DBZ	3	3000	RoHS & Green	SN	Level-1-260C-UNLIM		R8D	Samples
LM4040DIM3X-10/NOPB	ACTIVE	SOT-23	DBZ	3	3000	RoHS & Green	SN	Level-1-260C-UNLIM		R0D	Samples
LM4040DIM3X-2.0/NOPB	ACTIVE	SOT-23	DBZ	3	3000	RoHS & Green	NIPDAU	Level-1-260C-UNLIM		RJD	Samples
LM4040DIM3X-2.5/NOPB	ACTIVE	SOT-23	DBZ	3	3000	RoHS & Green	NIPDAU | SN	Level-1-260C-UNLIM		R2D	Samples

Orderable Device	Status (1)	Package Type	Package Drawing	Pins	Package Qty	Eco Plan (2)	Lead finish/ Ball material (6)	MSL Peak Temp (3)	Op Temp (°C)	Device Marking (4/5)	Samples
LM4040DIM3X-3.0/NOPB	ACTIVE	SOT-23	DBZ	3	3000	RoHS & Green	NIPDAU	Level-1-260C-UNLIM		RKD	Samples
LM4040DIM3X-4.1/NOPB	ACTIVE	SOT-23	DBZ	3	3000	RoHS & Green	NIPDAU	Level-1-260C-UNLIM		R4D	Samples
LM4040DIM3X-5.0/NOPB	ACTIVE	SOT-23	DBZ	3	3000	RoHS & Green	NIPDAU	Level-1-260C-UNLIM		R5D	Samples
LM4040DIM7-2.0/NOPB	ACTIVE	SC70	DCK	5	3000	RoHS & Green	SN	Level-1-260C-UNLIM		RJD	Samples
LM4040DIM7-2.5/NOPB	ACTIVE	SC70	DCK	5	3000	RoHS & Green	SN	Level-1-260C-UNLIM		R2D	Samples
LM4040DIM7-5.0/NOPB	ACTIVE	SC70	DCK	5	3000	RoHS & Green	SN	Level-1-260C-UNLIM		R5D	Samples
LM4040DIZ-10.0/NOPB	ACTIVE	TO-92	LP	3	1800	RoHS & Green	Call TI	N / A for Pkg Type		4040D IZ10	Samples
LM4040DIZ-2.5/NOPB	ACTIVE	TO-92	LP	3	1800	RoHS & Green	Call TI	N / A for Pkg Type		4040D IZ2.5	Samples
LM4040DIZ-4.1/NOPB	ACTIVE	TO-92	LP	3	1800	RoHS & Green	Call TI	N / A for Pkg Type		4040D IZ4.1	Samples
LM4040DIZ-5.0/LFT1	ACTIVE	TO-92	LP	3	2000	RoHS & Green	SN	N / A for Pkg Type		4040D IZ5.0	Samples
LM4040DIZ-5.0/NOPB	ACTIVE	TO-92	LP	3	1800	RoHS & Green	Call TI	N / A for Pkg Type		4040D IZ5.0	Samples
LM4040EEM3-2.5/NOPB	ACTIVE	SOT-23	DBZ	3	3000	RoHS & Green	NIPDAU	Level-1-260C-UNLIM		R2E	Samples
LM4040EIM3-2.5/NOPB	ACTIVE	SOT-23	DBZ	3	3000	RoHS & Green	NIPDAU	Level-1-260C-UNLIM		R2E	Samples
LM4040EIM3-3.0/NOPB	ACTIVE	SOT-23	DBZ	3	1000	RoHS & Green	NIPDAU	Level-1-260C-UNLIM		RKE	Samples
LM4040EIM3X-2.5/NOPB	ACTIVE	SOT-23	DBZ	3	3000	RoHS & Green	NIPDAU | SN	Level-1-260C-UNLIM		R2E	Samples
LM4040EIM3X-3.0/NOPB	ACTIVE	SOT-23	DBZ	3	3000	RoHS & Green	NIPDAU	Level-1-260C-UNLIM		RKE	Samples
LM4040EIM7-2.0/NOPB	ACTIVE	SC70	DCK	5	1000	RoHS & Green	SN	Level-1-260C-UNLIM		RJE	Samples
LM4040QAIM3-2.5/NOPB	ACTIVE	SOT-23	DBZ	3	3000	RoHS & Green	SN	Level-1-260C-UNLIM		R6A	Samples
LM4040QAIM3X2.5/NOPB	ACTIVE	SOT-23	DBZ	3	3000	RoHS & Green	SN	Level-1-260C-UNLIM		R6A	Samples
LM4040QBIM3-2.5/NOPB	ACTIVE	SOT-23	DBZ	3	1000	RoHS & Green	SN	Level-1-260C-UNLIM		R6B	Samples

Orderable Device	Status (1)	Package Type	Package Drawing	Pins	Package Qty	Eco Plan (2)	Lead finish/ Ball material (6)	MSL Peak Temp (3)	Op Temp (°C)	Device Marking (4/5)	Samples
LM4040QBIM3X2.5/NOPB	ACTIVE	SOT-23	DBZ	3	3000	RoHS & Green	SN	Level-1-260C-UNLIM		R6B	Samples
LM4040QCEM3-2.5/NOPB	ACTIVE	SOT-23	DBZ	3	3000	RoHS & Green	SN	Level-1-260C-UNLIM		R2C	Samples
LM4040QCEM3-3.0/NOPB	ACTIVE	SOT-23	DBZ	3	3000	RoHS & Green	SN	Level-1-260C-UNLIM	-40 to 125	R3C	Samples
LM4040QCIM3-2.5/NOPB	ACTIVE	SOT-23	DBZ	3	3000	RoHS & Green	SN	Level-1-260C-UNLIM		R6C	Samples
LM4040QCIM3X2.5/NOPB	ACTIVE	SOT-23	DBZ	3	3000	RoHS & Green	SN	Level-1-260C-UNLIM		R6C	Samples
LM4040QDEM3-2.5/NOPB	ACTIVE	SOT-23	DBZ	3	3000	RoHS & Green	SN	Level-1-260C-UNLIM		R2D	Samples
LM4040QDEM3-3.0/NOPB	ACTIVE	SOT-23	DBZ	3	3000	RoHS & Green	SN	Level-1-260C-UNLIM	-40 to 125	R3D	Samples
LM4040QDIM3-2.5/NOPB	ACTIVE	SOT-23	DBZ	3	3000	RoHS & Green	SN	Level-1-260C-UNLIM		R6D	Samples
LM4040QDIM3X2.5/NOPB	ACTIVE	SOT-23	DBZ	3	3000	RoHS & Green	SN	Level-1-260C-UNLIM		R6D	Samples
LM4040QEEM3-2.5/NOPB	ACTIVE	SOT-23	DBZ	3	1000	RoHS & Green	SN	Level-1-260C-UNLIM		R2E	Samples
LM4040QEEM3-3.0/NOPB	ACTIVE	SOT-23	DBZ	3	1000	RoHS & Green	SN	Level-1-260C-UNLIM	-40 to 125	R3E	Samples
LM4040QEIM3-2.5/NOPB	ACTIVE	SOT-23	DBZ	3	1000	RoHS & Green	SN	Level-1-260C-UNLIM		R6E	Samples
LM4040QEIM3X2.5/NOPB	ACTIVE	SOT-23	DBZ	3	3000	RoHS & Green	SN	Level-1-260C-UNLIM		R6E	Samples

(1) The marketing status values are defined as follows:
ACTIVE: Product device recommended for new designs.
LIFEBUY: TI has announced that the device will be discontinued, and a lifetime-buy period is in effect.
NRND: Not recommended for new designs. Device is in production to support existing customers, but TI does not recommend using this part in a new design.
PREVIEW: Device has been announced but is not in production. Samples may or may not be available.
OBSOLETE: TI has discontinued the production of the device.

(2) **RoHS:** TI defines "RoHS" to mean semiconductor products that are compliant with the current EU RoHS requirements for all 10 RoHS substances, including the requirement that RoHS substance do not exceed 0.1% by weight in homogeneous materials. Where designed to be soldered at high temperatures, "RoHS" products are suitable for use in specified lead-free processes. TI may reference these types of products as "Pb-Free".
RoHS Exempt: TI defines "RoHS Exempt" to mean products that contain lead but are compliant with EU RoHS pursuant to a specific EU RoHS exemption.
Green: TI defines "Green" to mean the content of Chlorine (Cl) and Bromine (Br) based flame retardants meet JS709B low halogen requirements of <=1000ppm threshold. Antimony trioxide based flame retardants must also meet the <=1000ppm threshold requirement.

(3) MSL, Peak Temp. - The Moisture Sensitivity Level rating according to the JEDEC industry standard classifications, and peak solder temperature.

(4) There may be additional marking, which relates to the logo, the lot trace code information, or the environmental category on the device.

(5) Multiple Device Markings will be inside parentheses. Only one Device Marking contained in parentheses and separated by a "~" will appear on a device. If a line is indented then it is a continuation of the previous line and the two combined represent the entire Device Marking for that device.

(6) Lead finish/Ball material - Orderable Devices may have multiple material finish options. Finish options are separated by a vertical ruled line. Lead finish/Ball material values may wrap to two lines if the finish value exceeds the maximum column width.

Important Information and Disclaimer: The information provided on this page represents TI's knowledge and belief as of the date that it is provided. TI bases its knowledge and belief on information provided by third parties, and makes no representation or warranty as to the accuracy of such information. Efforts are underway to better integrate information from third parties. TI has taken and continues to take reasonable steps to provide representative and accurate information but may not have conducted destructive testing or chemical analysis on incoming materials and chemicals. TI and TI suppliers consider certain information to be proprietary, and thus CAS numbers and other limited information may not be available for release.

In no event shall TI's liability arising out of such information exceed the total purchase price of the TI part(s) at issue in this document sold by TI to Customer on an annual basis.

OTHER QUALIFIED VERSIONS OF LM4040-N, LM4040-N-Q1 :

- Catalog : LM4040-N
- Automotive : LM4040-N-Q1

NOTE: Qualified Version Definitions:

- Catalog - TI's standard catalog product
- Automotive - Q100 devices qualified for high-reliability automotive applications targeting zero defects

TAPE AND REEL INFORMATION

REEL DIMENSIONS

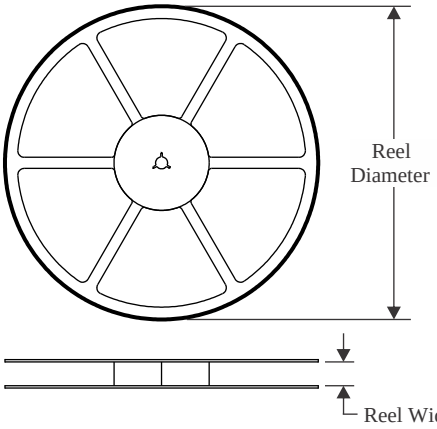

TAPE DIMENSIONS

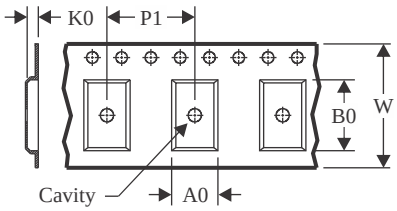

A0	Dimension designed to accommodate the component width
B0	Dimension designed to accommodate the component length
K0	Dimension designed to accommodate the component thickness
W	Overall width of the carrier tape
P1	Pitch between successive cavity centers

QUADRANT ASSIGNMENTS FOR PIN 1 ORIENTATION IN TAPE

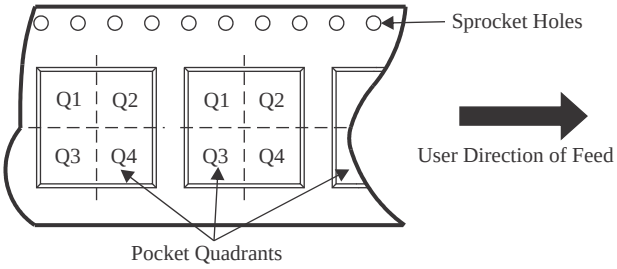

*All dimensions are nominal

Device	Package Type	Package Drawing	Pins	SPQ	Reel Diameter (mm)	Reel Width W1 (mm)	A0 (mm)	B0 (mm)	K0 (mm)	P1 (mm)	W (mm)	Pin1 Quadrant
LM4040AIM3-10.0/NOPB	SOT-23	DBZ	3	3000	178.0	8.4	3.3	2.9	1.22	4.0	8.0	Q3
LM4040AIM3-2.0/NOPB	SOT-23	DBZ	3	3000	180.0	8.4	2.9	3.35	1.35	4.0	8.0	Q3
LM4040AIM3-2.5/NOPB	SOT-23	DBZ	3	3000	180.0	8.4	2.9	3.35	1.35	4.0	8.0	Q3
LM4040AIM3-3.0/NOPB	SOT-23	DBZ	3	3000	180.0	8.4	2.9	3.35	1.35	4.0	8.0	Q3
LM4040AIM3-4.1/NOPB	SOT-23	DBZ	3	3000	180.0	8.4	2.9	3.35	1.35	4.0	8.0	Q3
LM4040AIM3-5.0/NOPB	SOT-23	DBZ	3	3000	180.0	8.4	2.9	3.35	1.35	4.0	8.0	Q3
LM4040AIM3X-10/NOPB	SOT-23	DBZ	3	3000	178.0	8.4	3.3	2.9	1.22	4.0	8.0	Q3
LM4040AIM3X-2.0/NOPB	SOT-23	DBZ	3	3000	180.0	8.4	2.9	3.35	1.35	4.0	8.0	Q3
LM4040AIM3X-2.5/NOPB	SOT-23	DBZ	3	3000	180.0	8.4	2.9	3.35	1.35	4.0	8.0	Q3
LM4040AIM3X-3.0/NOPB	SOT-23	DBZ	3	3000	180.0	8.4	2.9	3.35	1.35	4.0	8.0	Q3
LM4040AIM3X-4.1/NOPB	SOT-23	DBZ	3	3000	180.0	8.4	2.9	3.35	1.35	4.0	8.0	Q3
LM4040AIM3X-5.0/NOPB	SOT-23	DBZ	3	3000	180.0	8.4	2.9	3.35	1.35	4.0	8.0	Q3
LM4040BIM3-10.0/NOPB	SOT-23	DBZ	3	3000	178.0	8.4	3.3	2.9	1.22	4.0	8.0	Q3
LM4040BIM3-2.0/NOPB	SOT-23	DBZ	3	3000	180.0	8.4	2.9	3.35	1.35	4.0	8.0	Q3
LM4040BIM3-2.5/NOPB	SOT-23	DBZ	3	3000	180.0	8.4	2.9	3.35	1.35	4.0	8.0	Q3
LM4040BIM3-3.0/NOPB	SOT-23	DBZ	3	3000	180.0	8.4	2.9	3.35	1.35	4.0	8.0	Q3

Device	Package Type	Package Drawing	Pins	SPQ	Reel Diameter (mm)	Reel Width W1 (mm)	A0 (mm)	B0 (mm)	K0 (mm)	P1 (mm)	W (mm)	Pin1 Quadrant
LM4040BIM3-4.1/NOPB	SOT-23	DBZ	3	3000	180.0	8.4	2.9	3.35	1.35	4.0	8.0	Q3
LM4040BIM3-5.0/NOPB	SOT-23	DBZ	3	3000	180.0	8.4	2.9	3.35	1.35	4.0	8.0	Q3
LM4040BIM3-8.2/NOPB	SOT-23	DBZ	3	3000	178.0	8.4	3.3	2.9	1.22	4.0	8.0	Q3
LM4040BIM3X-10/NOPB	SOT-23	DBZ	3	3000	178.0	8.4	3.3	2.9	1.22	4.0	8.0	Q3
LM4040BIM3X-2.0/NOPB	SOT-23	DBZ	3	3000	180.0	8.4	2.9	3.35	1.35	4.0	8.0	Q3
LM4040BIM3X-2.5/NOPB	SOT-23	DBZ	3	3000	180.0	8.4	2.9	3.35	1.35	4.0	8.0	Q3
LM4040BIM3X-3.0/NOPB	SOT-23	DBZ	3	3000	180.0	8.4	2.9	3.35	1.35	4.0	8.0	Q3
LM4040BIM3X-4.1/NOPB	SOT-23	DBZ	3	3000	180.0	8.4	2.9	3.35	1.35	4.0	8.0	Q3
LM4040BIM3X-5.0/NOPB	SOT-23	DBZ	3	3000	180.0	8.4	2.9	3.35	1.35	4.0	8.0	Q3
LM4040BIM7-2.0/NOPB	SC70	DCK	5	3000	178.0	8.4	2.25	2.45	1.2	4.0	8.0	Q3
LM4040BIM7-2.5/NOPB	SC70	DCK	5	3000	178.0	8.4	2.25	2.45	1.2	4.0	8.0	Q3
LM4040BIM7-5.0/NOPB	SC70	DCK	5	3000	178.0	8.4	2.25	2.45	1.2	4.0	8.0	Q3
LM4040BIM7X-2.5/NOPB	SC70	DCK	5	3000	178.0	8.4	2.25	2.45	1.2	4.0	8.0	Q3
LM4040CEM3-2.5/NOPB	SOT-23	DBZ	3	3000	180.0	8.4	2.9	3.35	1.35	4.0	8.0	Q3
LM4040CEM3-3.0/NOPB	SOT-23	DBZ	3	3000	180.0	8.4	2.9	3.35	1.35	4.0	8.0	Q3
LM4040CEM3-5.0/NOPB	SOT-23	DBZ	3	3000	180.0	8.4	2.9	3.35	1.35	4.0	8.0	Q3
LM4040CEM3X-3.0/NOPB	SOT-23	DBZ	3	3000	180.0	8.4	2.9	3.35	1.35	4.0	8.0	Q3
LM4040CEM3X-5.0/NOPB	SOT-23	DBZ	3	3000	180.0	8.4	2.9	3.35	1.35	4.0	8.0	Q3
LM4040CIM3-10.0/NOPB	SOT-23	DBZ	3	3000	178.0	8.4	3.3	2.9	1.22	4.0	8.0	Q3
LM4040CIM3-2.0/NOPB	SOT-23	DBZ	3	3000	180.0	8.4	2.9	3.35	1.35	4.0	8.0	Q3
LM4040CIM3-2.5/NOPB	SOT-23	DBZ	3	3000	180.0	8.4	2.9	3.35	1.35	4.0	8.0	Q3
LM4040CIM3-3.0/NOPB	SOT-23	DBZ	3	3000	180.0	8.4	2.9	3.35	1.35	4.0	8.0	Q3
LM4040CIM3-4.1/NOPB	SOT-23	DBZ	3	3000	180.0	8.4	2.9	3.35	1.35	4.0	8.0	Q3
LM4040CIM3-5.0/NOPB	SOT-23	DBZ	3	3000	180.0	8.4	2.9	3.35	1.35	4.0	8.0	Q3
LM4040CIM3-8.2/NOPB	SOT-23	DBZ	3	3000	178.0	8.4	3.3	2.9	1.22	4.0	8.0	Q3
LM4040CIM3X-10/NOPB	SOT-23	DBZ	3	3000	178.0	8.4	3.3	2.9	1.22	4.0	8.0	Q3
LM4040CIM3X-2.0/NOPB	SOT-23	DBZ	3	3000	180.0	8.4	2.9	3.35	1.35	4.0	8.0	Q3
LM4040CIM3X-2.5/NOPB	SOT-23	DBZ	3	3000	180.0	8.4	2.9	3.35	1.35	4.0	8.0	Q3
LM4040CIM3X-3.0/NOPB	SOT-23	DBZ	3	3000	180.0	8.4	2.9	3.35	1.35	4.0	8.0	Q3
LM4040CIM3X-4.1/NOPB	SOT-23	DBZ	3	3000	180.0	8.4	2.9	3.35	1.35	4.0	8.0	Q3
LM4040CIM3X-5.0/NOPB	SOT-23	DBZ	3	3000	180.0	8.4	2.9	3.35	1.35	4.0	8.0	Q3
LM4040CIM7-2.0/NOPB	SC70	DCK	5	3000	178.0	8.4	2.25	2.45	1.2	4.0	8.0	Q3
LM4040CIM7-2.5/NOPB	SC70	DCK	5	3000	178.0	8.4	2.25	2.45	1.2	4.0	8.0	Q3
LM4040CIM7X-2.5/NOPB	SC70	DCK	5	3000	178.0	8.4	2.25	2.45	1.2	4.0	8.0	Q3
LM4040DEM3-2.0/NOPB	SOT-23	DBZ	3	3000	180.0	8.4	2.9	3.35	1.35	4.0	8.0	Q3
LM4040DEM3-2.5/NOPB	SOT-23	DBZ	3	3000	180.0	8.4	2.9	3.35	1.35	4.0	8.0	Q3
LM4040DEM3-3.0/NOPB	SOT-23	DBZ	3	3000	180.0	8.4	2.9	3.35	1.35	4.0	8.0	Q3
LM4040DEM3-5.0/NOPB	SOT-23	DBZ	3	3000	180.0	8.4	2.9	3.35	1.35	4.0	8.0	Q3
LM4040DEM3X-2.5/NOPB	SOT-23	DBZ	3	3000	180.0	8.4	2.9	3.35	1.35	4.0	8.0	Q3
LM4040DEM3X-5.0/NOPB	SOT-23	DBZ	3	3000	180.0	8.4	2.9	3.35	1.35	4.0	8.0	Q3
LM4040DIM3-10.0/NOPB	SOT-23	DBZ	3	3000	178.0	8.4	3.3	2.9	1.22	4.0	8.0	Q3

Device	Package Type	Package Drawing	Pins	SPQ	Reel Diameter (mm)	Reel Width W1 (mm)	A0 (mm)	B0 (mm)	K0 (mm)	P1 (mm)	W (mm)	Pin1 Quadrant
LM4040DIM3-2.0/NOPB	SOT-23	DBZ	3	3000	180.0	8.4	2.9	3.35	1.35	4.0	8.0	Q3
LM4040DIM3-2.5/NOPB	SOT-23	DBZ	3	3000	180.0	8.4	2.9	3.35	1.35	4.0	8.0	Q3
LM4040DIM3-3.0/NOPB	SOT-23	DBZ	3	3000	180.0	8.4	2.9	3.35	1.35	4.0	8.0	Q3
LM4040DIM3-4.1/NOPB	SOT-23	DBZ	3	3000	180.0	8.4	2.9	3.35	1.35	4.0	8.0	Q3
LM4040DIM3-5.0/NOPB	SOT-23	DBZ	3	3000	180.0	8.4	2.9	3.35	1.35	4.0	8.0	Q3
LM4040DIM3-8.2/NOPB	SOT-23	DBZ	3	3000	178.0	8.4	3.3	2.9	1.22	4.0	8.0	Q3
LM4040DIM3X-10/NOPB	SOT-23	DBZ	3	3000	178.0	8.4	3.3	2.9	1.22	4.0	8.0	Q3
LM4040DIM3X-2.0/NOPB	SOT-23	DBZ	3	3000	180.0	8.4	2.9	3.35	1.35	4.0	8.0	Q3
LM4040DIM3X-2.5/NOPB	SOT-23	DBZ	3	3000	180.0	8.4	2.9	3.35	1.35	4.0	8.0	Q3
LM4040DIM3X-3.0/NOPB	SOT-23	DBZ	3	3000	180.0	8.4	2.9	3.35	1.35	4.0	8.0	Q3
LM4040DIM3X-4.1/NOPB	SOT-23	DBZ	3	3000	180.0	8.4	2.9	3.35	1.35	4.0	8.0	Q3
LM4040DIM3X-5.0/NOPB	SOT-23	DBZ	3	3000	180.0	8.4	2.9	3.35	1.35	4.0	8.0	Q3
LM4040DIM7-2.0/NOPB	SC70	DCK	5	3000	178.0	8.4	2.25	2.45	1.2	4.0	8.0	Q3
LM4040DIM7-2.5/NOPB	SC70	DCK	5	3000	178.0	8.4	2.25	2.45	1.2	4.0	8.0	Q3
LM4040DIM7-5.0/NOPB	SC70	DCK	5	3000	178.0	8.4	2.25	2.45	1.2	4.0	8.0	Q3
LM4040EEM3-2.5/NOPB	SOT-23	DBZ	3	3000	180.0	8.4	2.9	3.35	1.35	4.0	8.0	Q3
LM4040EIM3-3.0/NOPB	SOT-23	DBZ	3	1000	180.0	8.4	2.9	3.35	1.35	4.0	8.0	Q3
LM4040EIM3X-2.5/NOPB	SOT-23	DBZ	3	3000	180.0	8.4	2.9	3.35	1.35	4.0	8.0	Q3
LM4040EIM3X-3.0/NOPB	SOT-23	DBZ	3	3000	180.0	8.4	2.9	3.35	1.35	4.0	8.0	Q3
LM4040EIM7-2.0/NOPB	SC70	DCK	5	1000	178.0	8.4	2.25	2.45	1.2	4.0	8.0	Q3
LM4040QAIM3-2.5/NOPB	SOT-23	DBZ	3	3000	178.0	8.4	3.3	2.9	1.22	4.0	8.0	Q3
LM4040QAIM3X2.5/NOPB	SOT-23	DBZ	3	3000	178.0	8.4	3.3	2.9	1.22	4.0	8.0	Q3
LM4040QBIM3-2.5/NOPB	SOT-23	DBZ	3	1000	178.0	8.4	3.3	2.9	1.22	4.0	8.0	Q3
LM4040QBIM3X2.5/NOPB	SOT-23	DBZ	3	3000	178.0	8.4	3.3	2.9	1.22	4.0	8.0	Q3
LM4040QCEM3-2.5/ NOPB	SOT-23	DBZ	3	3000	178.0	8.4	3.3	2.9	1.22	4.0	8.0	Q3
LM4040QCEM3-3.0/ NOPB	SOT-23	DBZ	3	3000	178.0	8.4	3.3	2.9	1.22	4.0	8.0	Q3
LM4040QCIM3-2.5/NOPB	SOT-23	DBZ	3	3000	178.0	8.4	3.3	2.9	1.22	4.0	8.0	Q3
LM4040QCIM3X2.5/ NOPB	SOT-23	DBZ	3	3000	178.0	8.4	3.3	2.9	1.22	4.0	8.0	Q3
LM4040QDEM3-2.5/ NOPB	SOT-23	DBZ	3	3000	178.0	8.4	3.3	2.9	1.22	4.0	8.0	Q3
LM4040QDEM3-3.0/ NOPB	SOT-23	DBZ	3	3000	178.0	8.4	3.3	2.9	1.22	4.0	8.0	Q3
LM4040QDIM3-2.5/NOPB	SOT-23	DBZ	3	3000	178.0	8.4	3.3	2.9	1.22	4.0	8.0	Q3
LM4040QDIM3X2.5/ NOPB	SOT-23	DBZ	3	3000	178.0	8.4	3.3	2.9	1.22	4.0	8.0	Q3
LM4040QEEM3-2.5/ NOPB	SOT-23	DBZ	3	1000	178.0	8.4	3.3	2.9	1.22	4.0	8.0	Q3
LM4040QEEM3-3.0/ NOPB	SOT-23	DBZ	3	1000	178.0	8.4	3.3	2.9	1.22	4.0	8.0	Q3
LM4040QEIM3-2.5/NOPB	SOT-23	DBZ	3	1000	178.0	8.4	3.3	2.9	1.22	4.0	8.0	Q3
LM4040QEIM3X2.5/NOPB	SOT-23	DBZ	3	3000	178.0	8.4	3.3	2.9	1.22	4.0	8.0	Q3

TAPE AND REEL BOX DIMENSIONS

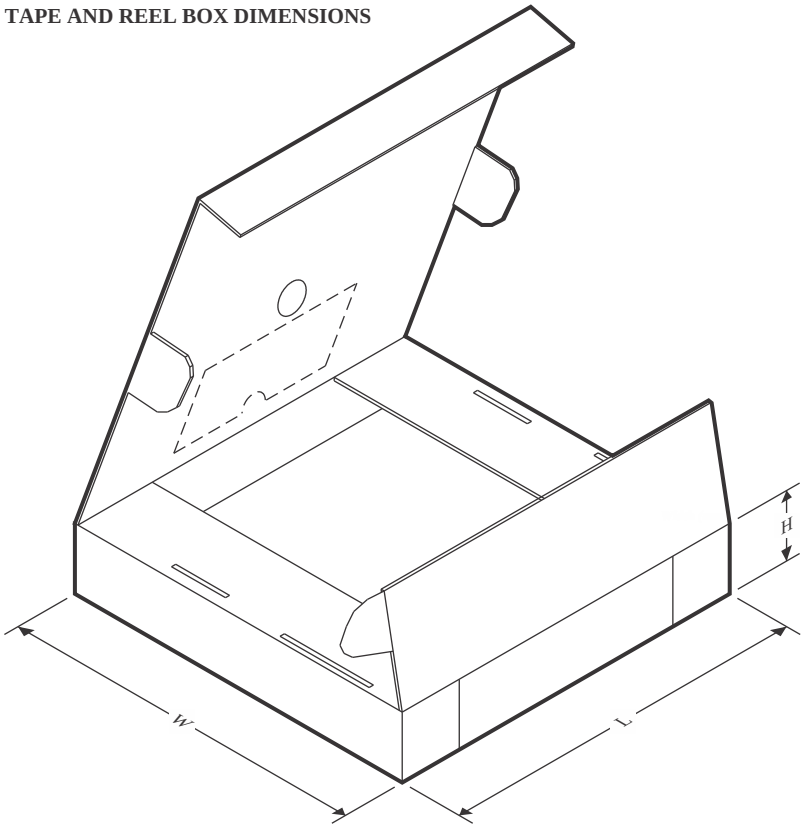

*All dimensions are nominal

Device	Package Type	Package Drawing	Pins	SPQ	Length (mm)	Width (mm)	Height (mm)
LM4040AIM3-10.0/NOPB	SOT-23	DBZ	3	3000	208.0	191.0	35.0
LM4040AIM3-2.0/NOPB	SOT-23	DBZ	3	3000	210.0	185.0	35.0
LM4040AIM3-2.5/NOPB	SOT-23	DBZ	3	3000	210.0	185.0	35.0
LM4040AIM3-3.0/NOPB	SOT-23	DBZ	3	3000	210.0	185.0	35.0
LM4040AIM3-4.1/NOPB	SOT-23	DBZ	3	3000	210.0	185.0	35.0
LM4040AIM3-5.0/NOPB	SOT-23	DBZ	3	3000	210.0	185.0	35.0
LM4040AIM3X-10/NOPB	SOT-23	DBZ	3	3000	208.0	191.0	35.0
LM4040AIM3X-2.0/NOPB	SOT-23	DBZ	3	3000	210.0	185.0	35.0
LM4040AIM3X-2.5/NOPB	SOT-23	DBZ	3	3000	210.0	185.0	35.0
LM4040AIM3X-3.0/NOPB	SOT-23	DBZ	3	3000	210.0	185.0	35.0
LM4040AIM3X-4.1/NOPB	SOT-23	DBZ	3	3000	210.0	185.0	35.0
LM4040AIM3X-5.0/NOPB	SOT-23	DBZ	3	3000	210.0	185.0	35.0
LM4040BIM3-10.0/NOPB	SOT-23	DBZ	3	3000	208.0	191.0	35.0
LM4040BIM3-2.0/NOPB	SOT-23	DBZ	3	3000	210.0	185.0	35.0
LM4040BIM3-2.5/NOPB	SOT-23	DBZ	3	3000	210.0	185.0	35.0
LM4040BIM3-3.0/NOPB	SOT-23	DBZ	3	3000	210.0	185.0	35.0
LM4040BIM3-4.1/NOPB	SOT-23	DBZ	3	3000	210.0	185.0	35.0
LM4040BIM3-5.0/NOPB	SOT-23	DBZ	3	3000	210.0	185.0	35.0

Device	Package Type	Package Drawing	Pins	SPQ	Length (mm)	Width (mm)	Height (mm)
LM4040BIM3-8.2/NOPB	SOT-23	DBZ	3	3000	208.0	191.0	35.0
LM4040BIM3X-10/NOPB	SOT-23	DBZ	3	3000	208.0	191.0	35.0
LM4040BIM3X-2.0/NOPB	SOT-23	DBZ	3	3000	210.0	185.0	35.0
LM4040BIM3X-2.5/NOPB	SOT-23	DBZ	3	3000	210.0	185.0	35.0
LM4040BIM3X-3.0/NOPB	SOT-23	DBZ	3	3000	210.0	185.0	35.0
LM4040BIM3X-4.1/NOPB	SOT-23	DBZ	3	3000	210.0	185.0	35.0
LM4040BIM3X-5.0/NOPB	SOT-23	DBZ	3	3000	210.0	185.0	35.0
LM4040BIM7-2.0/NOPB	SC70	DCK	5	3000	208.0	191.0	35.0
LM4040BIM7-2.5/NOPB	SC70	DCK	5	3000	208.0	191.0	35.0
LM4040BIM7-5.0/NOPB	SC70	DCK	5	3000	208.0	191.0	35.0
LM4040BIM7X-2.5/NOPB	SC70	DCK	5	3000	208.0	191.0	35.0
LM4040CEM3-2.5/NOPB	SOT-23	DBZ	3	3000	210.0	185.0	35.0
LM4040CEM3-3.0/NOPB	SOT-23	DBZ	3	3000	210.0	185.0	35.0
LM4040CEM3-5.0/NOPB	SOT-23	DBZ	3	3000	210.0	185.0	35.0
LM4040CEM3X-3.0/NOPB	SOT-23	DBZ	3	3000	210.0	185.0	35.0
LM4040CEM3X-5.0/NOPB	SOT-23	DBZ	3	3000	210.0	185.0	35.0
LM4040CIM3-10.0/NOPB	SOT-23	DBZ	3	3000	208.0	191.0	35.0
LM4040CIM3-2.0/NOPB	SOT-23	DBZ	3	3000	210.0	185.0	35.0
LM4040CIM3-2.5/NOPB	SOT-23	DBZ	3	3000	210.0	185.0	35.0
LM4040CIM3-3.0/NOPB	SOT-23	DBZ	3	3000	210.0	185.0	35.0
LM4040CIM3-4.1/NOPB	SOT-23	DBZ	3	3000	210.0	185.0	35.0
LM4040CIM3-5.0/NOPB	SOT-23	DBZ	3	3000	210.0	185.0	35.0
LM4040CIM3-8.2/NOPB	SOT-23	DBZ	3	3000	208.0	191.0	35.0
LM4040CIM3X-10/NOPB	SOT-23	DBZ	3	3000	208.0	191.0	35.0
LM4040CIM3X-2.0/NOPB	SOT-23	DBZ	3	3000	210.0	185.0	35.0
LM4040CIM3X-2.5/NOPB	SOT-23	DBZ	3	3000	210.0	185.0	35.0
LM4040CIM3X-3.0/NOPB	SOT-23	DBZ	3	3000	210.0	185.0	35.0
LM4040CIM3X-4.1/NOPB	SOT-23	DBZ	3	3000	210.0	185.0	35.0
LM4040CIM3X-5.0/NOPB	SOT-23	DBZ	3	3000	210.0	185.0	35.0
LM4040CIM7-2.0/NOPB	SC70	DCK	5	3000	208.0	191.0	35.0
LM4040CIM7-2.5/NOPB	SC70	DCK	5	3000	208.0	191.0	35.0
LM4040CIM7X-2.5/NOPB	SC70	DCK	5	3000	208.0	191.0	35.0
LM4040DEM3-2.0/NOPB	SOT-23	DBZ	3	3000	210.0	185.0	35.0
LM4040DEM3-2.5/NOPB	SOT-23	DBZ	3	3000	210.0	185.0	35.0
LM4040DEM3-3.0/NOPB	SOT-23	DBZ	3	3000	210.0	185.0	35.0
LM4040DEM3-5.0/NOPB	SOT-23	DBZ	3	3000	210.0	185.0	35.0
LM4040DEM3X-2.5/NOPB	SOT-23	DBZ	3	3000	210.0	185.0	35.0
LM4040DEM3X-5.0/NOPB	SOT-23	DBZ	3	3000	210.0	185.0	35.0
LM4040DIM3-10.0/NOPB	SOT-23	DBZ	3	3000	208.0	191.0	35.0
LM4040DIM3-2.0/NOPB	SOT-23	DBZ	3	3000	210.0	185.0	35.0
LM4040DIM3-2.5/NOPB	SOT-23	DBZ	3	3000	210.0	185.0	35.0
LM4040DIM3-3.0/NOPB	SOT-23	DBZ	3	3000	210.0	185.0	35.0
LM4040DIM3-4.1/NOPB	SOT-23	DBZ	3	3000	210.0	185.0	35.0

Device	Package Type	Package Drawing	Pins	SPQ	Length (mm)	Width (mm)	Height (mm)
LM4040DIM3-5.0/NOPB	SOT-23	DBZ	3	3000	210.0	185.0	35.0
LM4040DIM3-8.2/NOPB	SOT-23	DBZ	3	3000	208.0	191.0	35.0
LM4040DIM3X-10/NOPB	SOT-23	DBZ	3	3000	208.0	191.0	35.0
LM4040DIM3X-2.0/NOPB	SOT-23	DBZ	3	3000	210.0	185.0	35.0
LM4040DIM3X-2.5/NOPB	SOT-23	DBZ	3	3000	210.0	185.0	35.0
LM4040DIM3X-3.0/NOPB	SOT-23	DBZ	3	3000	210.0	185.0	35.0
LM4040DIM3X-4.1/NOPB	SOT-23	DBZ	3	3000	210.0	185.0	35.0
LM4040DIM3X-5.0/NOPB	SOT-23	DBZ	3	3000	210.0	185.0	35.0
LM4040DIM7-2.0/NOPB	SC70	DCK	5	3000	208.0	191.0	35.0
LM4040DIM7-2.5/NOPB	SC70	DCK	5	3000	208.0	191.0	35.0
LM4040DIM7-5.0/NOPB	SC70	DCK	5	3000	208.0	191.0	35.0
LM4040EEM3-2.5/NOPB	SOT-23	DBZ	3	3000	210.0	185.0	35.0
LM4040EIM3-3.0/NOPB	SOT-23	DBZ	3	1000	210.0	185.0	35.0
LM4040EIM3X-2.5/NOPB	SOT-23	DBZ	3	3000	210.0	185.0	35.0
LM4040EIM3X-3.0/NOPB	SOT-23	DBZ	3	3000	210.0	185.0	35.0
LM4040EIM7-2.0/NOPB	SC70	DCK	5	1000	208.0	191.0	35.0
LM4040QAIM3-2.5/NOPB	SOT-23	DBZ	3	3000	208.0	191.0	35.0
LM4040QAIM3X2.5/NOPB	SOT-23	DBZ	3	3000	208.0	191.0	35.0
LM4040QBIM3-2.5/NOPB	SOT-23	DBZ	3	1000	208.0	191.0	35.0
LM4040QBIM3X2.5/NOPB	SOT-23	DBZ	3	3000	208.0	191.0	35.0
LM4040QCEM3-2.5/NOPB	SOT-23	DBZ	3	3000	208.0	191.0	35.0
LM4040QCEM3-3.0/NOPB	SOT-23	DBZ	3	3000	208.0	191.0	35.0
LM4040QCIM3-2.5/NOPB	SOT-23	DBZ	3	3000	208.0	191.0	35.0
LM4040QCIM3X2.5/NOPB	SOT-23	DBZ	3	3000	208.0	191.0	35.0
LM4040QDEM3-2.5/NOPB	SOT-23	DBZ	3	3000	208.0	191.0	35.0
LM4040QDEM3-3.0/NOPB	SOT-23	DBZ	3	3000	208.0	191.0	35.0
LM4040QDIM3-2.5/NOPB	SOT-23	DBZ	3	3000	208.0	191.0	35.0
LM4040QDIM3X2.5/NOPB	SOT-23	DBZ	3	3000	208.0	191.0	35.0
LM4040QEEM3-2.5/NOPB	SOT-23	DBZ	3	1000	208.0	191.0	35.0
LM4040QEEM3-3.0/NOPB	SOT-23	DBZ	3	1000	208.0	191.0	35.0
LM4040QEIM3-2.5/NOPB	SOT-23	DBZ	3	1000	208.0	191.0	35.0
LM4040QEIM3X2.5/NOPB	SOT-23	DBZ	3	3000	208.0	191.0	35.0

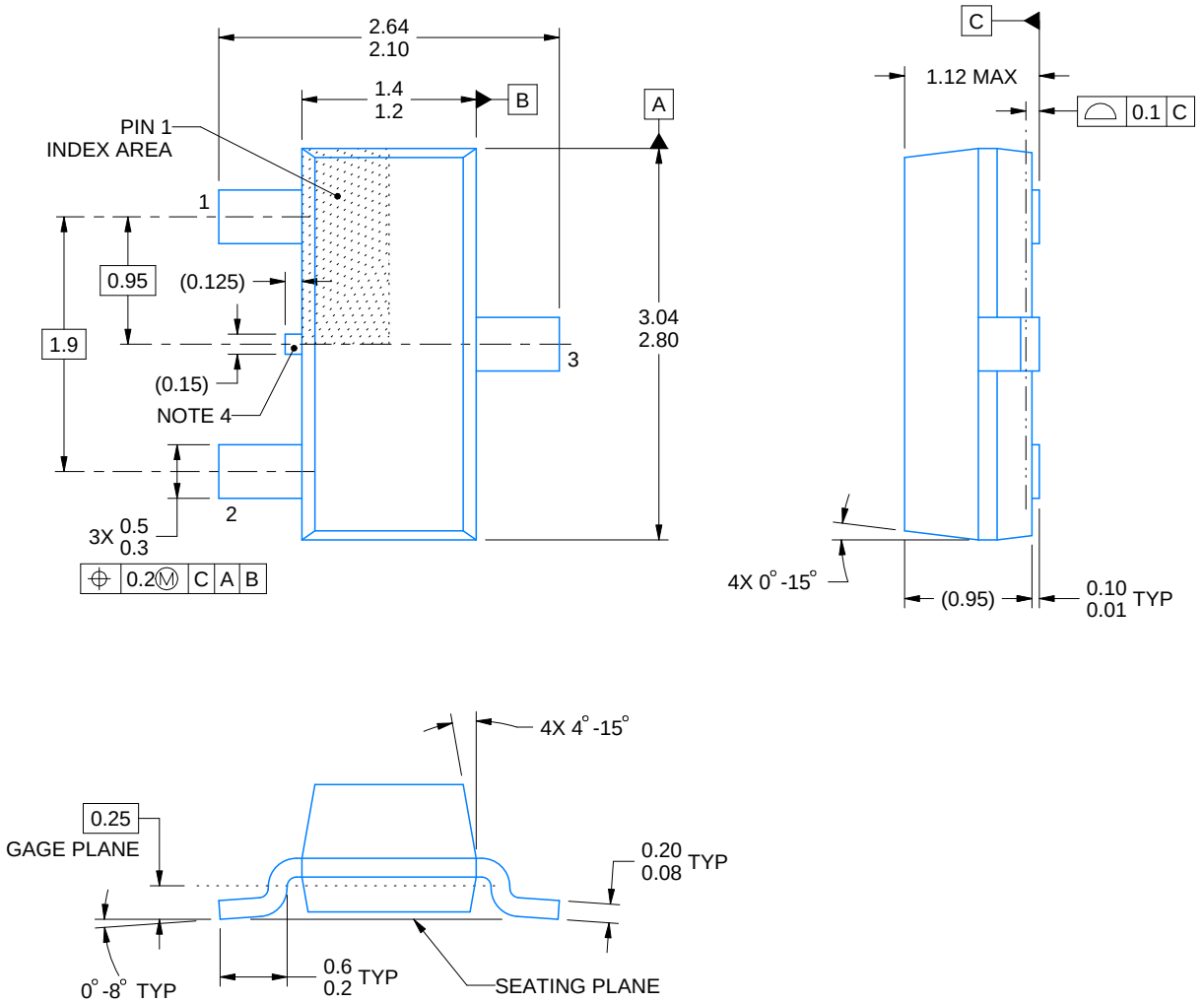

4214838/F 08/2024

NOTES:

1. All linear dimensions are in millimeters. Any dimensions in parenthesis are for reference only. Dimensioning and tolerancing per ASME Y14.5M.
2. This drawing is subject to change without notice.
3. Reference JEDEC registration TO-236, except minimum foot length.
4. Support pin may differ or may not be present.
5. Body dimensions do not include mold flash, protrusions, or gate burrs. Mold flash, protrusions, or gate burrs shall not exceed 0.25mm per side

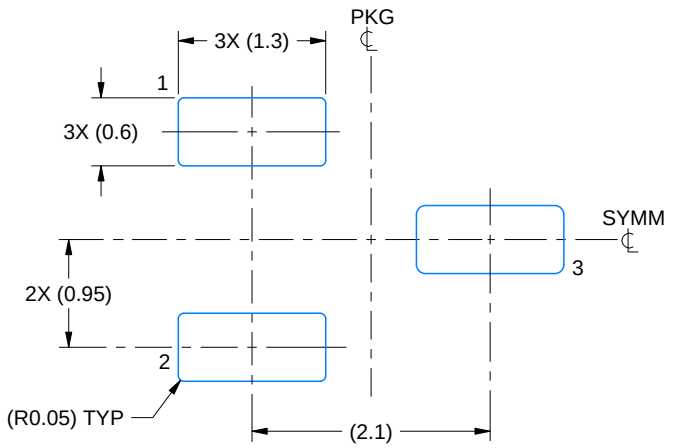

LAND PATTERN EXAMPLE
SCALE:15X

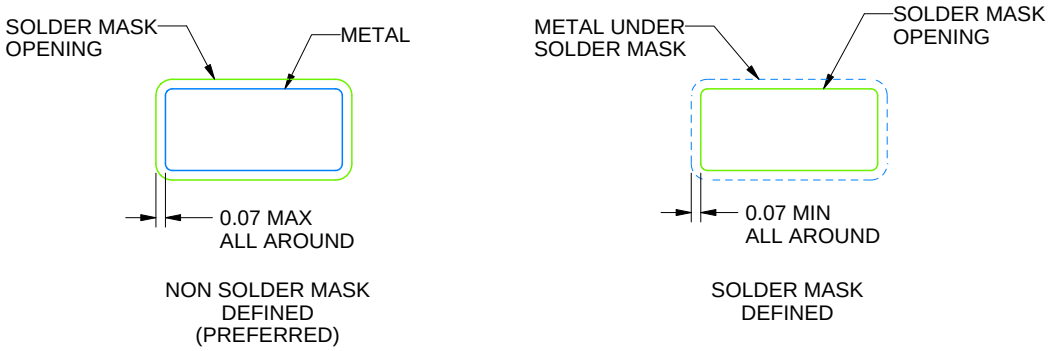

SOLDER MASK DETAILS

4214838/F 08/2024

NOTES: (continued)

5. Publication IPC-7351 may have alternate designs.
6. Solder mask tolerances between and around signal pads can vary based on board fabrication site.

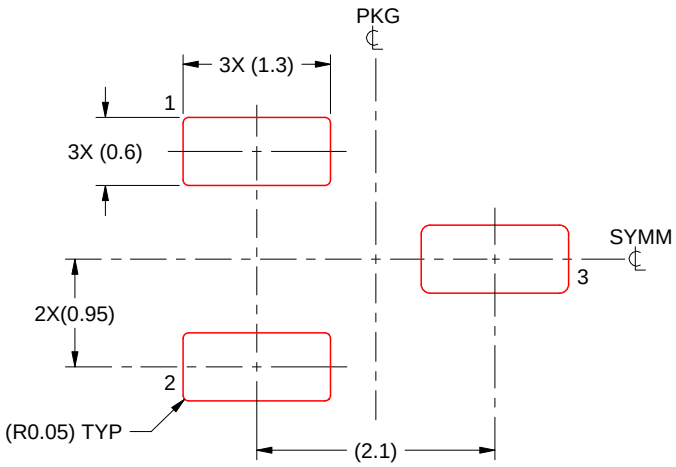

SOLDER PASTE EXAMPLE
BASED ON 0.125 THICK STENCIL
SCALE:15X

4214838/F 08/2024

NOTES: (continued)

7. Laser cutting apertures with trapezoidal walls and rounded corners may offer better paste release. IPC-7525 may have alternate design recommendations.
8. Board assembly site may have different recommendations for stencil design.

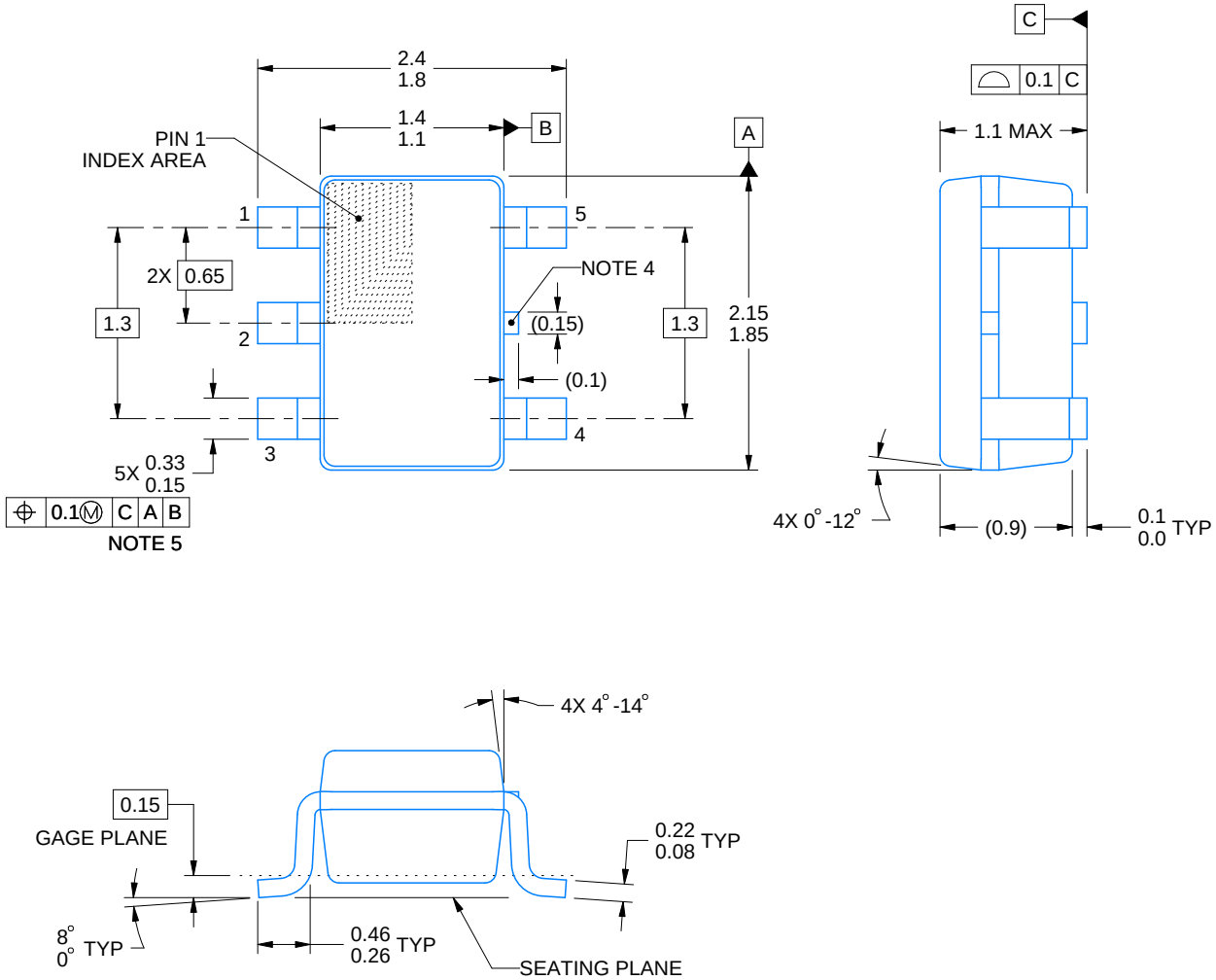

4214834/F 08/2024

NOTES:

1. All linear dimensions are in millimeters. Any dimensions in parenthesis are for reference only. Dimensioning and tolerancing per ASME Y14.5M.
2. This drawing is subject to change without notice.
3. Refernce JEDEC MO-203.
4. Support pin may differ or may not be present.
5. Lead width does not comply with JEDEC.
6. Body dimensions do not include mold flash, protrusions, or gate burrs. Mold flash, protrusions, or gate burrs shall not exceed 0.25mm per side

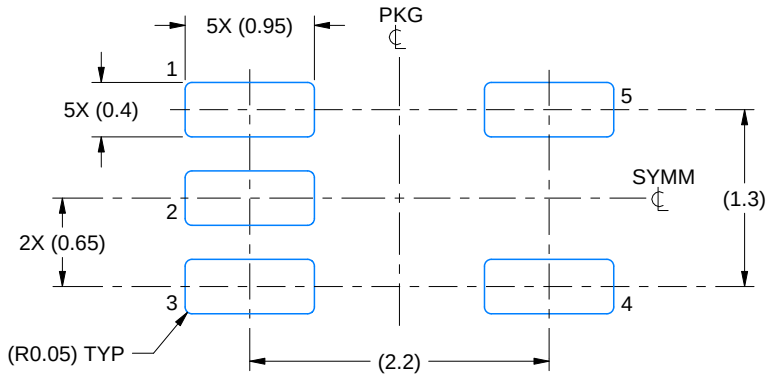

LAND PATTERN EXAMPLE
EXPOSED METAL SHOWN
SCALE:18X

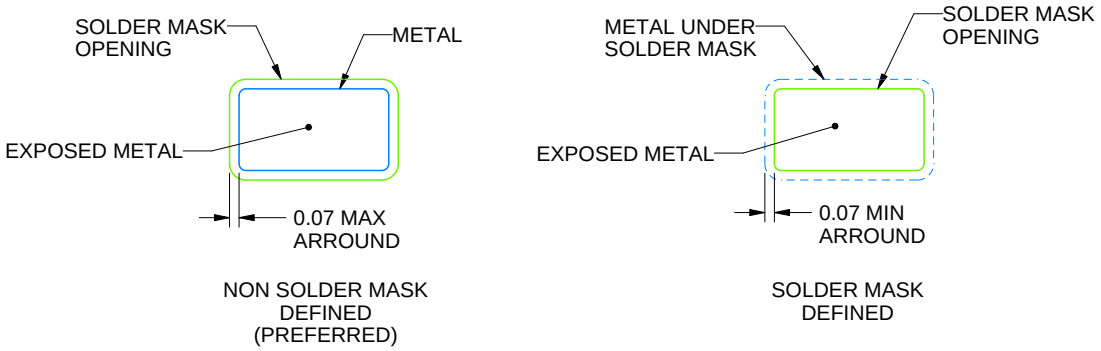

SOLDER MASK DETAILS

4214834/F 08/2024

NOTES: (continued)

7. Publication IPC-7351 may have alternate designs.
8. Solder mask tolerances between and around signal pads can vary based on board fabrication site.

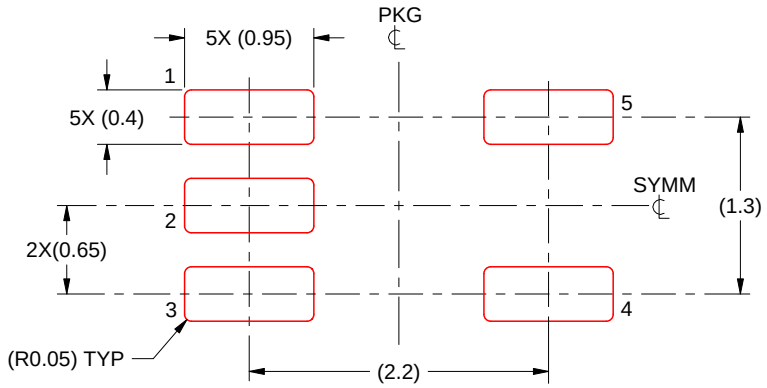

SOLDER PASTE EXAMPLE
BASED ON 0.125 THICK STENCIL
SCALE:18X

4214834/F 08/2024

NOTES: (continued)

9. Laser cutting apertures with trapezoidal walls and rounded corners may offer better paste release. IPC-7525 may have alternate design recommendations.
10. Board assembly site may have different recommendations for stencil design.

Images above are just a representation of the package family, actual package may vary.
Refer to the product data sheet for package details.

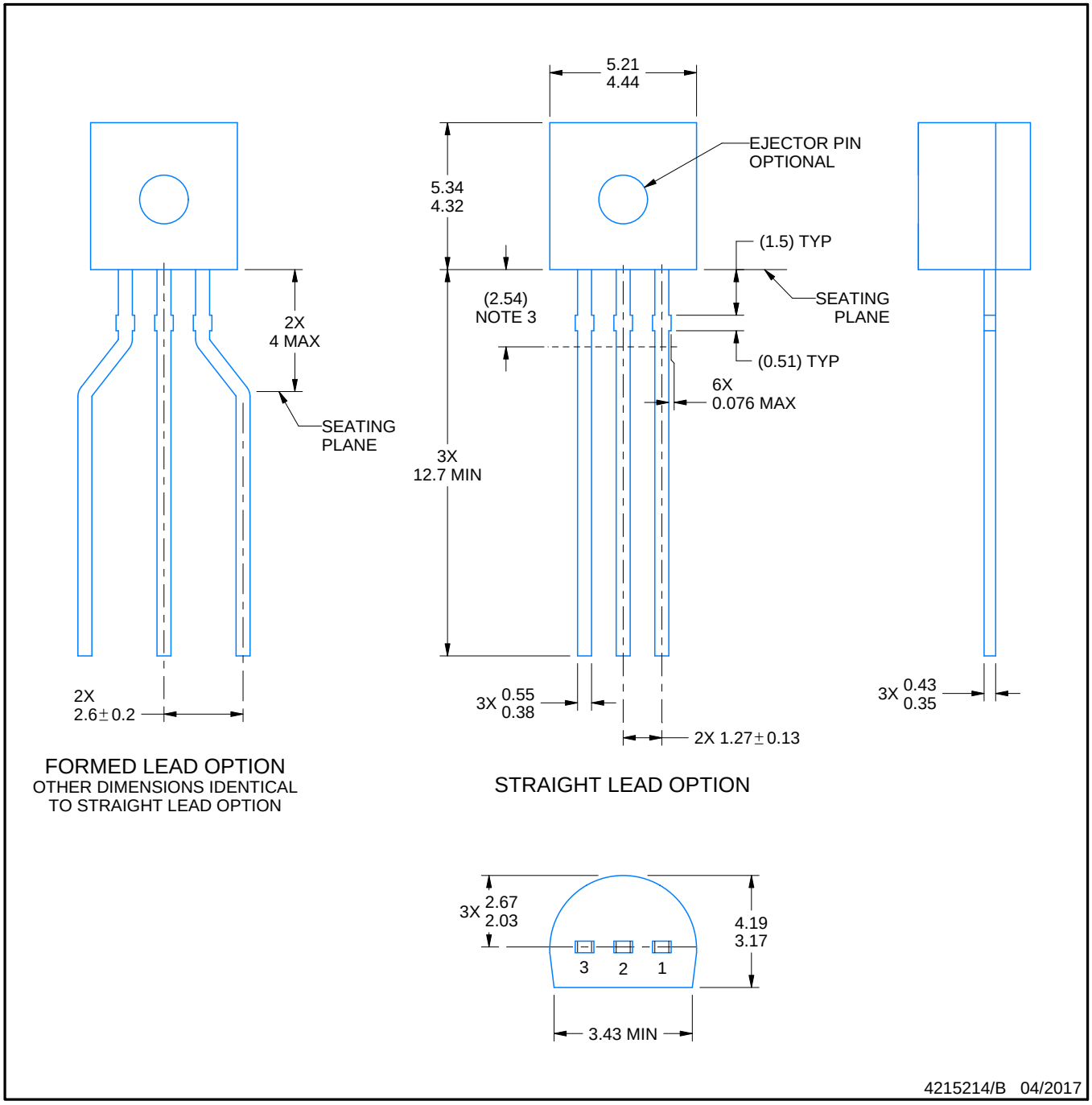

NOTES:

1. All linear dimensions are in millimeters. Any dimensions in parenthesis are for reference only. Dimensioning and tolerancing per ASME Y14.5M.
2. This drawing is subject to change without notice.
3. Lead dimensions are not controlled within this area.
4. Reference JEDEC TO-226, variation AA.
5. Shipping method:
   a. Straight lead option available in bulk pack only.
   b. Formed lead option available in tape and reel or ammo pack.
   c. Specific products can be offered in limited combinations of shipping medium and lead options.
   d. Consult product folder for more information on available options.

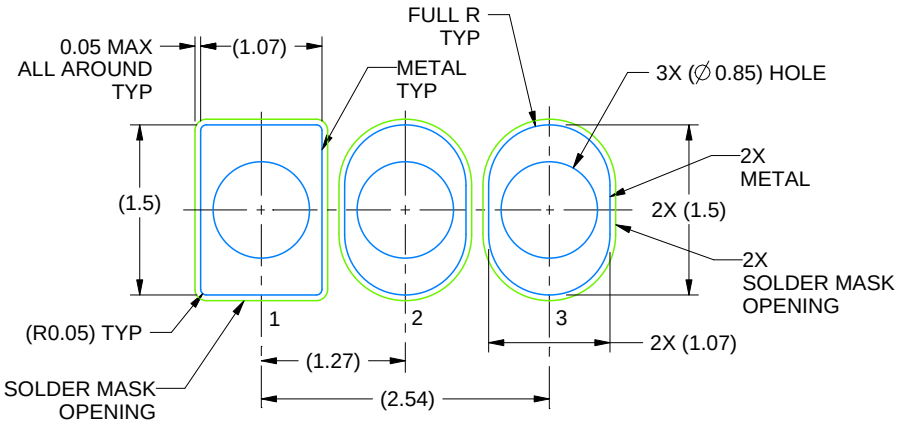

LAND PATTERN EXAMPLE
STRAIGHT LEAD OPTION
NON-SOLDER MASK DEFINED
SCALE:15X

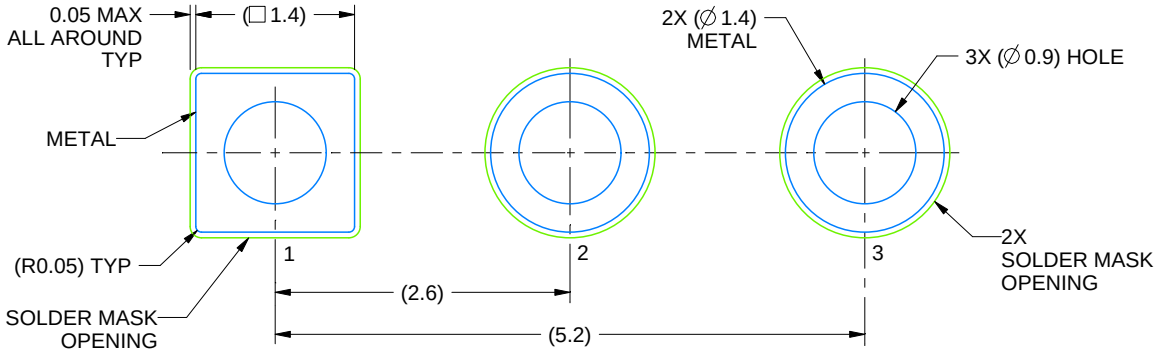

LAND PATTERN EXAMPLE
FORMED LEAD OPTION
NON-SOLDER MASK DEFINED
SCALE:15X

4215214/B 04/2017

TO-92

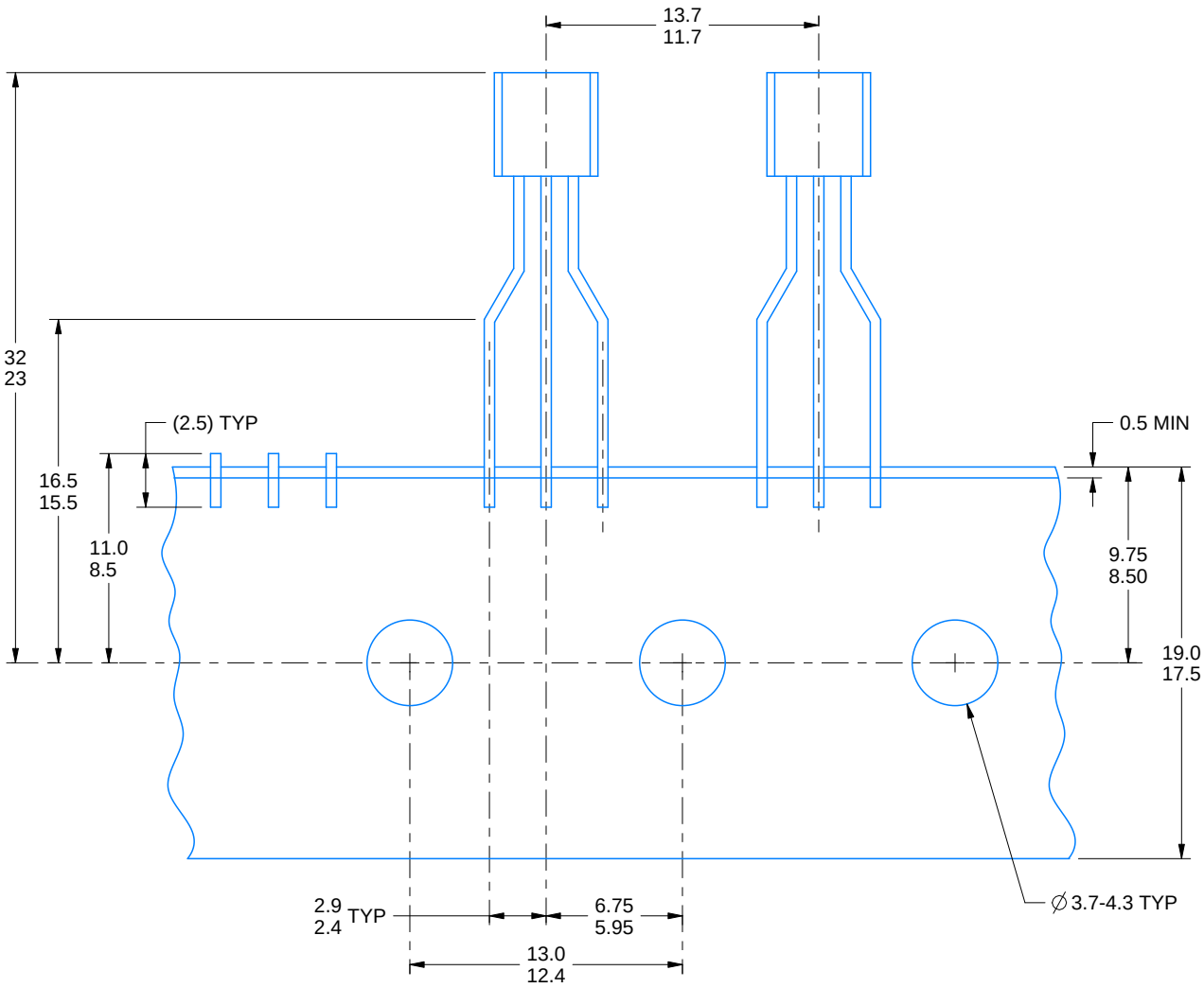

FOR FORMED LEAD OPTION PACKAGE

4215214/B 04/2017

IMPORTANT NOTICE AND DISCLAIMER

TI PROVIDES TECHNICAL AND RELIABILITY DATA (INCLUDING DATA SHEETS), DESIGN RESOURCES (INCLUDING REFERENCE DESIGNS), APPLICATION OR OTHER DESIGN ADVICE, WEB TOOLS, SAFETY INFORMATION, AND OTHER RESOURCES “AS IS” AND WITH ALL FAULTS, AND DISCLAIMS ALL WARRANTIES, EXPRESS AND IMPLIED, INCLUDING WITHOUT LIMITATION ANY IMPLIED WARRANTIES OF MERCHANTABILITY, FITNESS FOR A PARTICULAR PURPOSE OR NON-INFRINGEMENT OF THIRD PARTY INTELLECTUAL PROPERTY RIGHTS.

These resources are intended for skilled developers designing with TI products. You are solely responsible for (1) selecting the appropriate TI products for your application, (2) designing, validating and testing your application, and (3) ensuring your application meets applicable standards, and any other safety, security, regulatory or other requirements.

These resources are subject to change without notice. TI grants you permission to use these resources only for development of an application that uses the TI products described in the resource. Other reproduction and display of these resources is prohibited. No license is granted to any other TI intellectual property right or to any third party intellectual property right. TI disclaims responsibility for, and you will fully indemnify TI and its representatives against, any claims, damages, costs, losses, and liabilities arising out of your use of these resources.

TI’s products are provided subject to TI’s Terms of Sale or other applicable terms available either on ti.com or provided in conjunction with such TI products. TI’s provision of these resources does not expand or otherwise alter TI’s applicable warranties or warranty disclaimers for TI products.

TI objects to and rejects any additional or different terms you may have proposed.

Mailing Address: Texas Instruments, Post Office Box 655303, Dallas, Texas 75265
Copyright © 2024, Texas Instruments Incorporated