Series 18

Streamlined. Compact and tactile.

https://eao.com/18

sales@prom-elec.com / ООО ПРОМЭЛЕКТРОНИКА

18 Information about the Series

Key advantages

- Excellent tactile feedback when switching
- Gold-plated silver contacts available for low voltages and currents
- Bright, homogenous illumination
- Compact construction
- Can be mounted on PCBs
- Raised 8mm or flush 16mm mounting

Typical application areas

- Audio / video
- Measurement technology
- Medical engineering

Functions

- Pushbutton
- Illuminated pushbutton
- Indicator

Design

- Flush
- Raised

IP front protection

- IP40

Raitings

- 42 VAC (100 mA)

Mounting cut-outs

- Ø 8 mm
- Ø 16 mm
- Square

Terminal

- Soldering terminal
- PCB (with PCB plug-in base)

Lens Material

- Plastic

Markings

- Engraving
- Laser marking

Approvals

- No approbations

Conformities

- CE
- UKCA
- 2011/65/EU (RoHS)

Flush design	
Pushbutton square	368
Pushbutton round	370
Illuminated pushbutton square	372
Illuminated pushbutton round	374
Indicator square	376
Indicator	378
Raised design	
Pushbutton square	380
Pushbutton rectangular	382
Pushbutton round	384
Illuminated pushbutton square	386
Illuminated pushbutton rectangular	388
Illuminated pushbutton round	390
Indicator square	392
Indicator rectangular	394
Indicator round	396
Components	**398**
Accessories	**401**
Technical data	**404**
Application guidelines	**405**

01
02
03
04
09
14
17
18
19
22
31
41
45
51
56
57
61
70
71
82
84
92
96

Pushbutton square, IP40

Product can differ from the current configuration.

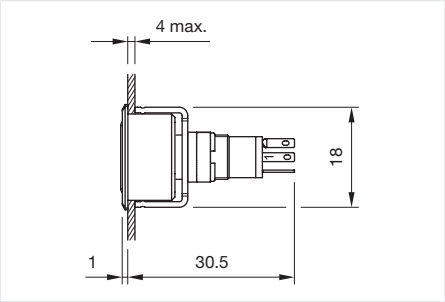

Dimensions [mm]

General information

- +/- terminals are not connected

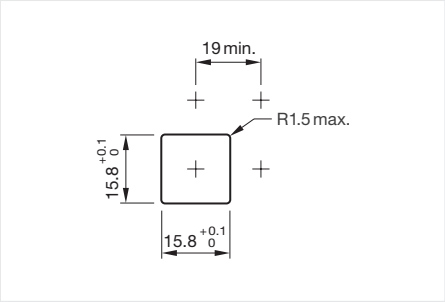

Mounting cut-outs [mm]

Equipment consisting of (schematic overview)

Lens Page 392

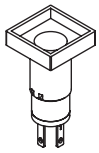

Actuator

Front bezel set Page 393

Fixing nut

Each Part Number listed below includes all the black components shown in the 3D-drawing.

To obtain a complete unit, please select the red components from the pages shown.

Actuator, Front dimension 19 mm x 19 mm

Switching action	Contacts	Terminal	Part No.	Wiring diagram	Component Layout
Momentary	1 NO	Soldering terminal	18-187.035	133	7
	1 NC	Soldering terminal	18-188.035	131	7
Maintained	1 NO	Soldering terminal	18-287.035	134	7
	1 NC	Soldering terminal	18-288.035	132	7

Contacts: NC = Normally closed, NO = Normally open

Wiring diagrams

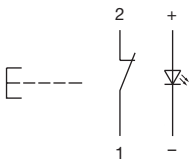

Wiring diagram 131

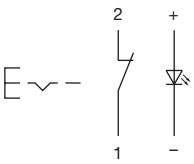

Wiring diagram 132

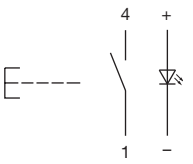

Wiring diagram 133

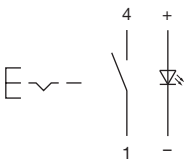

Wiring diagram 134

Component layouts

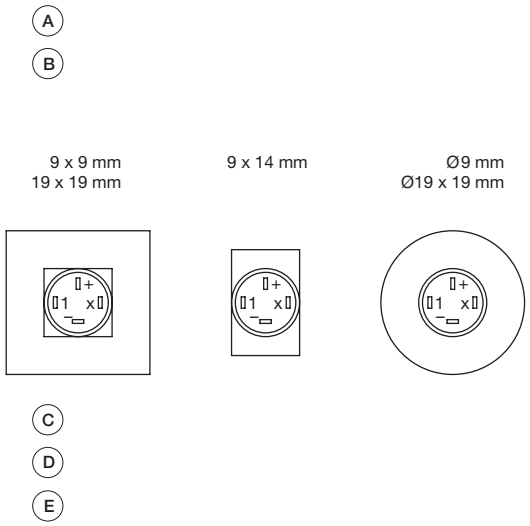

Component layout 7

A = Terminals (rear side)
B = Illuminated pushbutton
C = x = Contact No.
D = 2 = Normally open
E = 4 = Normally close

01 02 03 04 09 14 17 18 19 22 31 41 45 51 56 57 61 70 71 82 84 92 96

Pushbutton round, IP40

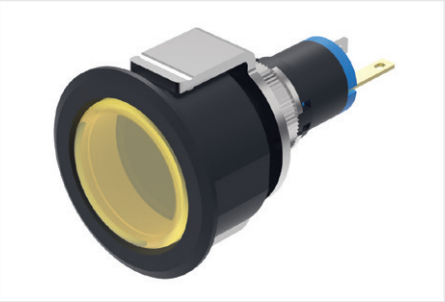

Product can differ from the current configuration.

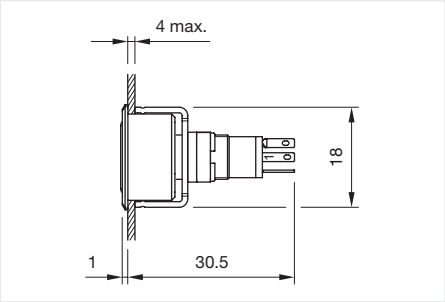

Dimensions [mm]

General information

- +/- terminals are not connected

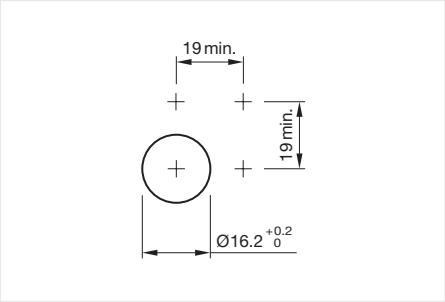

Mounting cut-outs [mm]

Equipment consisting of (schematic overview)

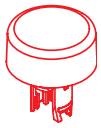

Lens — Page 392

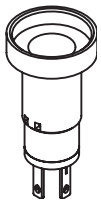

Actuator

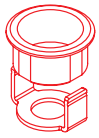

Front bezel set — Page 393

Fixing nut

Each Part Number listed below includes all the black components shown in the 3D-drawing.

To obtain a complete unit, please select the red components from the pages shown.

Actuator, Front dimension Ø 19 mm

Switching action	Contacts	Terminal	Part No.	Wiring diagram	Component Layout
Momentary	1 NO	Soldering terminal	18-167.035	133	7
	1 NC	Soldering terminal	18-168.035	131	7
Maintained	1 NO	Soldering terminal	18-267.035	134	7
	1 NC	Soldering terminal	18-268.035	132	7

Contacts: NC = Normally closed, NO = Normally open

Wiring diagrams

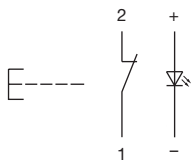

Wiring diagram 131

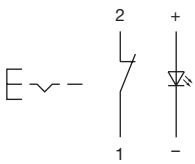

Wiring diagram 132

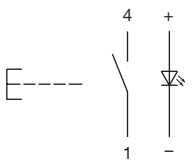

Wiring diagram 133

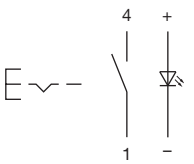

Wiring diagram 134

Component layouts

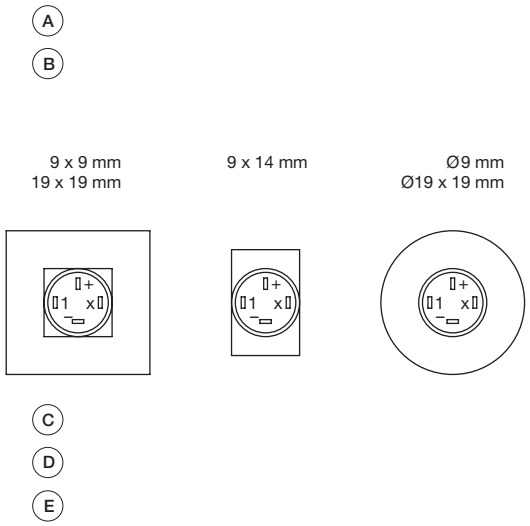

Component layout 7

A = Terminals (rear side)
B = Illuminated pushbutton
C = x = Contact No.
D = 2 = Normally open
E = 4 = Normally close

01
02
03
04
09
14
17
18
19
22
31
41
45
51
56
57
61
70
71
82
84
92
96

Illuminated pushbutton square, IP40

Product can differ from the current configuration.

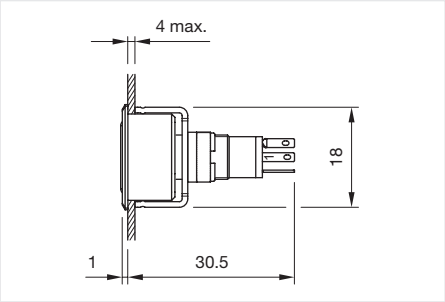

Dimensions [mm]

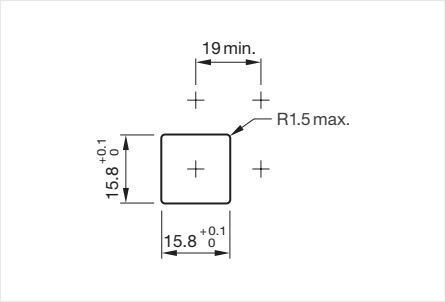

Mounting cut-outs [mm]

Equipment consisting of (schematic overview)

Lens Page 392

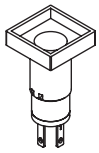

Actuator

Front bezel set Page 393

Fixing nut

Each Part Number listed below includes all the black components shown in the 3D-drawing.

To obtain a complete unit, please select the red components from the pages shown.

Actuator, Front dimension 19 mm x 19 mm

Switching action	Contacts	Terminal	Part No.	Wiring diagram	Component Layout
Momentary	1 NO	Soldering terminal	18-187.035	133	7
	1 NC	Soldering terminal	18-188.035	131	7
Maintained	1 NO	Soldering terminal	18-287.035	134	7
	1 NC	Soldering terminal	18-288.035	132	7

Contacts: NC = Normally closed, NO = Normally open

Wiring diagrams

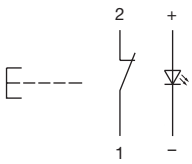

Wiring diagram 131

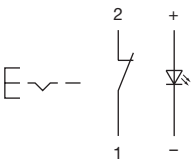

Wiring diagram 132

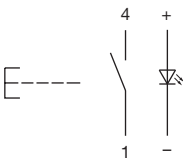

Wiring diagram 133

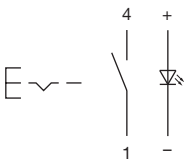

Wiring diagram 134

Component layouts

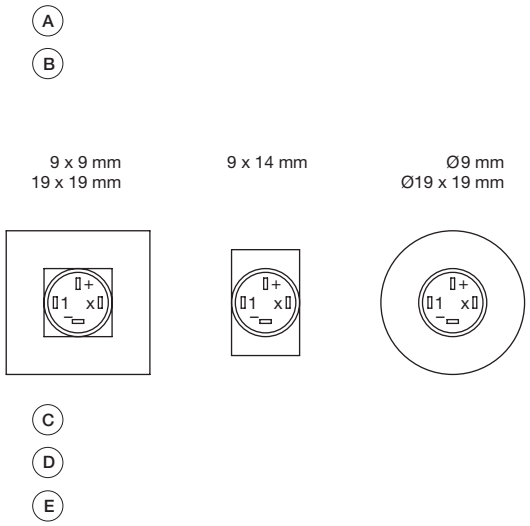

Component layout 7

A = Terminals (rear side)
B = Illuminated pushbutton
C = x = Contact No.
D = 2 = Normally open
E = 4 = Normally close

Tactile, compact and bright.
EAO Series 18.

Especially well-suited as controls and indicators – thanks to the tactile feedback and the outstanding illumination.

- Excellent tactile feedback
- Outstanding illumination
- Long service life
- Gold-plated nickel contacts
- Flush and raised variants
- Compact design

www.eao.com/18

Your Expert Partner for **Human Machine Interfaces**

01 02 03 04 09 14 17 18 19 22 31 41 45 51 56 57 61 70 71 82 84 92 96

Illuminated pushbutton round, IP40

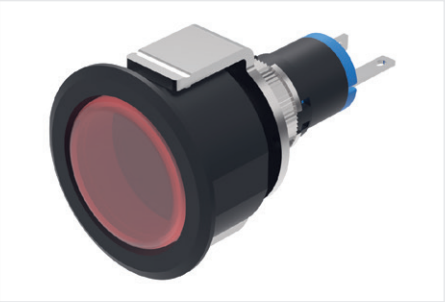

Product can differ from the current configuration.

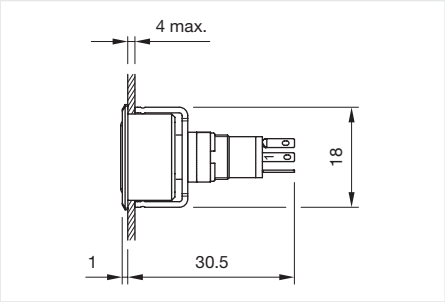

Dimensions [mm]

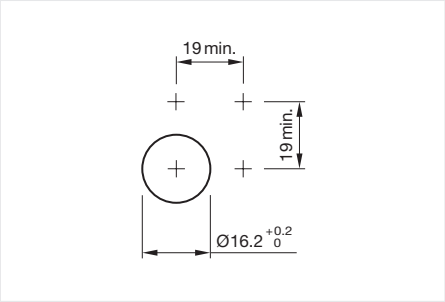

Mounting cut-outs [mm]

Equipment consisting of (schematic overview)

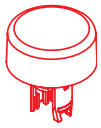

Lens Page 392

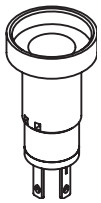

Actuator

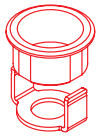

Front bezel set Page 393

Fixing nut

Each Part Number listed below includes all the black components shown in the 3D-drawing.

To obtain a complete unit, please select the red components from the pages shown.

Actuator, Front dimension Ø 19 mm

Switching action	Contacts	Terminal	Part No.	Wiring diagram	Component Layout
Momentary	1 NO	Soldering terminal	18-167.035	133	7
	1 NC	Soldering terminal	18-168.035	131	7
Maintained	1 NO	Soldering terminal	18-267.035	134	7
	1 NC	Soldering terminal	18-268.035	132	7

Contacts: NC = Normally closed, NO = Normally open

Wiring diagrams

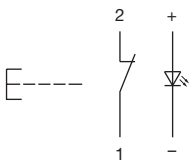

Wiring diagram 131

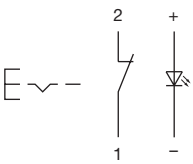

Wiring diagram 132

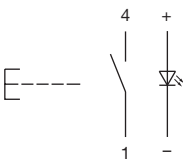

Wiring diagram 133

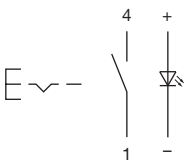

Wiring diagram 134

Component layouts

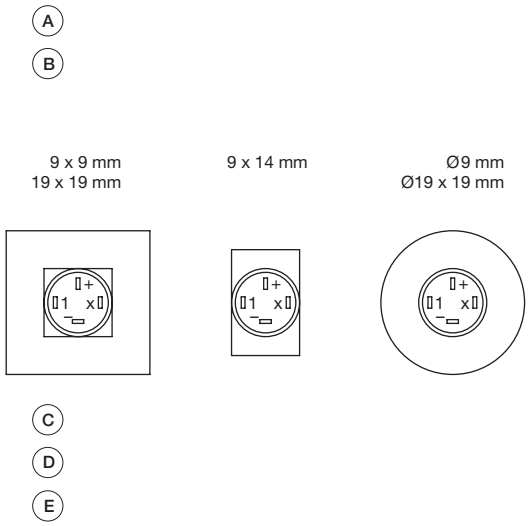

Component layout 7

A = Terminals (rear side)
B = Illuminated pushbutton
C = x = Contact No.
D = 2 = Normally open
E = 4 = Normally close

01
02
03
04
09
14
17
18
19
22
31
41
45
51
56
57
61
70
71
82
84
92
96

Indicator square, IP40

Product can differ from the current configuration.

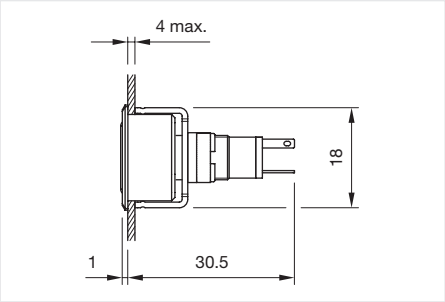

Dimensions [mm]

General information

- Luminosity and wave length variations caused by LED manufacturing processes may cause slight differences regarding the illumination. The customer has to decide what resistor shall be used to the LED
- The customer has to decide what series resistor shall be used to the LED

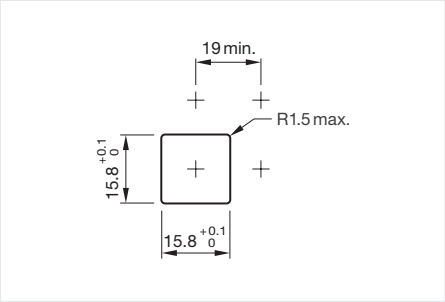

Mounting cut-outs [mm]

Equipment consisting of (schematic overview)

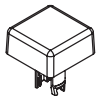

Lens

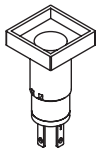

Actuator

Front bezel set Page 393

Fixing nut

Each Part Number listed below includes all the black components shown in the 3D-drawing.

To obtain a complete unit, please select the red components from the pages shown.

Actuator, Front dimension 19 mm x 19 mm

Operating voltage	Illumination colour	Lens colour	Lens shape	Terminal	Part No.	Wiring diagram	Component Layout
Customer specific	Red	Red	flush	Soldering terminal	18-080.0052L	130	6
	White	Yellow	flush	Soldering terminal	18-080.0054L	130	6
	Green	Green	flush	Soldering terminal	18-080.0055L	130	6
12 V DC ±10 %	Red	Red	flush	Soldering terminal	18-081.0052L	440	6
24 V DC ±10 %	Red	Red	flush	Soldering terminal	18-082.0052L	440	6
	Yellow	Yellow	flush	Soldering terminal	18-082.0054L	440	6
	Green	Green	flush	Soldering terminal	18-082.0055L	440	6

Wiring diagrams

Wiring diagram 130

Wiring diagram

Component layouts

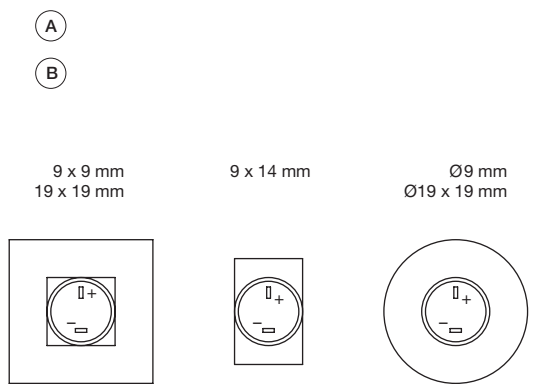

Component layout 6

A = Terminals (rear side)
B = Indicator

01 02 03 04 09 14 17 18 19 22 31 41 45 51 56 57 61 70 71 82 84 92 96

Indicator, IP40

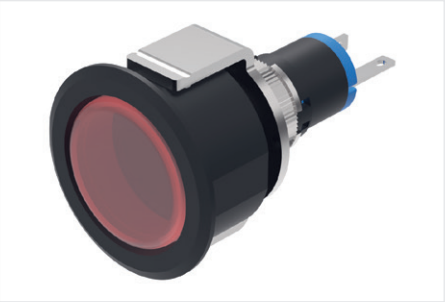

Product can differ from the current configuration.

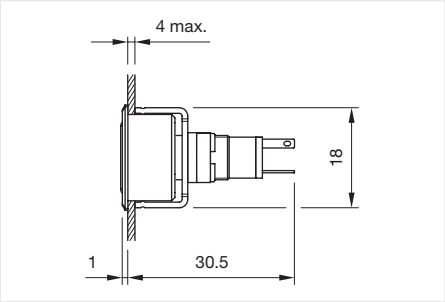

Dimensions [mm]

General information

- Luminosity and wave length variations caused by LED manufacturing processes may cause slight differences regarding the illumination. The customer has to decide what resistor shall be used to the LED
- The customer has to decide what series resistor shall be used to the LED

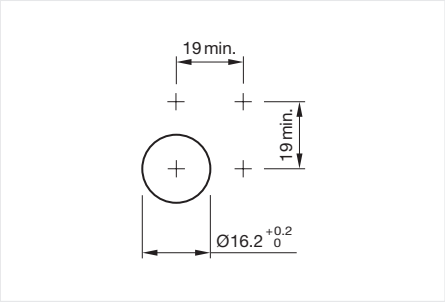

Mounting cut-outs [mm]

Equipment consisting of (schematic overview)

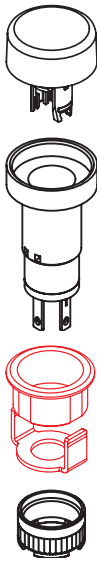

Lens

Actuator

Front bezel set Page 393

Fixing nut

Each Part Number listed below includes all the black components shown in the 3D-drawing.

To obtain a complete unit, please select the red components from the pages shown.

Actuator, Front dimension Ø 19 mm

Operating voltage	Illumination colour	Lens colour	Lens shape	Terminal	Part No.	Wiring diagram	Com-ponent Layout
Customer specific	Red	Red	flush	Soldering terminal	18-060.0052L	130	6
	White	Yellow	flush	Soldering terminal	18-060.0054L	130	6
	Green	Green	flush	Soldering terminal	18-060.0055L	130	6
12 V DC ±10 %	Red	Red	flush	Soldering terminal	18-061.0052L	440	6
	Yellow	Yellow	flush	Soldering terminal	18-061.0054L	440	6
	Green	Green	flush	Soldering terminal	18-061.0055L	440	6
24 V DC ±10 %	Red	Red	flush	Soldering terminal	18-062.0052L	440	6
	Yellow	Yellow	flush	Soldering terminal	18-062.0054L	440	6
	Green	Green	flush	Soldering terminal	18-062.0055L	440	6

Wiring diagrams

Wiring diagram 130

Wiring diagram

Component layouts

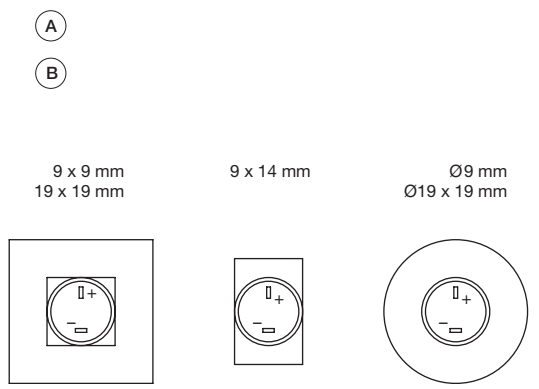

Component layout 6

A = Terminals (rear side)
B = Indicator

Taktil, kompakt und lichtstark.
EAO Baureihe 18.

Prädestiniert für Steuerungen und Statusanzeigen – dank des taktilen Schaltgefühls und einer lichtstarken Ausleuchtung.

- Hervorragendes, taktiles Schaltgefühl
- Ausgezeichnete Ausleuchtung
- Lange Lebensdauer
- Goldplattierte Nickelkontakte
- Flache und erhabene Versionen
- Kompaktes Design

www.eao.com/18

Your Expert Partner for **Human Machine Interfaces**

01
02
03
04
09
14
17
18
19
22
31
41
45
51
56
57
61
70
71
82
84
92
96

Pushbutton rectangular, IP40

Product can differ from the current configuration.

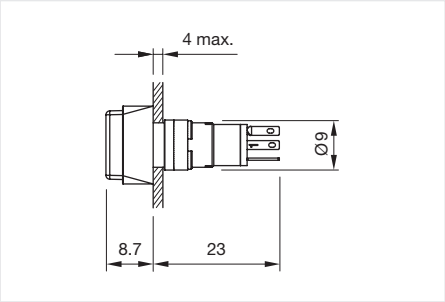

Dimensions [mm]

General information

- +/- terminals are not connected

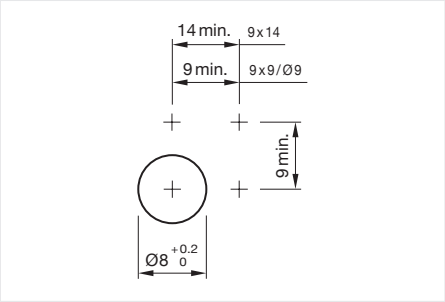

Mounting cut-outs [mm]

Equipment consisting of (schematic overview)

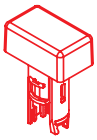

Lens Page 392

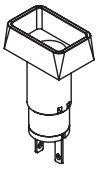

Actuator

Fixing nut

Each Part Number listed below includes all the black components shown in the 3D-drawing.

To obtain a complete unit, please select the red components from the pages shown.

Actuator, Front dimension 14 mm x 9 mm

Switching action	Contacts	Terminal	Part No.	Wiring diagram	Component Layout
Momentary	1 NO	Soldering terminal	18-147.035	133	7
Maintained	1 NO	Soldering terminal	18-247.035	134	7
	1 NC	Soldering terminal	18-248.035	132	7

Contacts: NC = Normally closed, NO = Normally open

Wiring diagrams

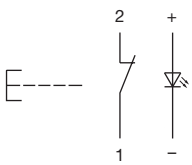

Wiring diagram 131

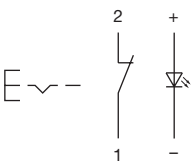

Wiring diagram 132

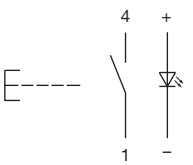

Wiring diagram 133

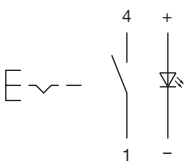

Wiring diagram 134

Component layouts

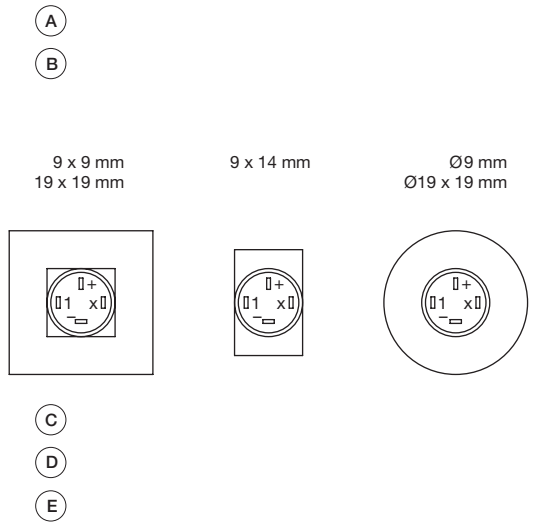

Component layout 7

A = Terminals (rear side)
B = Illuminated pushbutton
C = x = Contact No.
D = 2 = Normally open
E = 4 = Normally close

01
02
03
04
09
14
17
18
19
22
31
41
45
51
56
57
61
70
71
82
84
92
96

Pushbutton round, IP40

Product can differ from the current configuration.

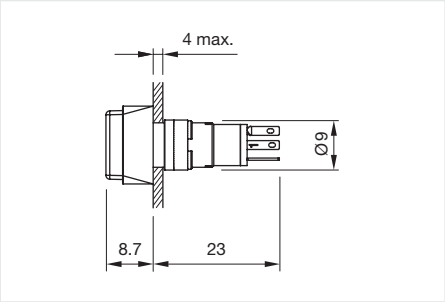

Dimensions [mm]

General information

- +/- terminals are not connected

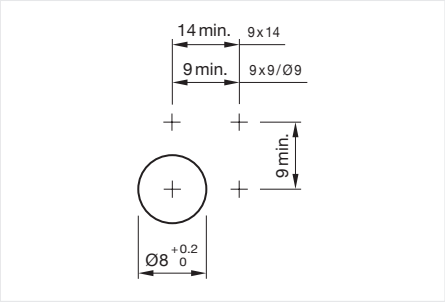

Mounting cut-outs [mm]

Equipment consisting of (schematic overview)

Lens Page 392

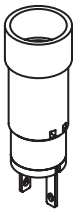

Actuator

Fixing nut

Each Part Number listed below includes all the black components shown in the 3D-drawing.

To obtain a complete unit, please select the red components from the pages shown.

Actuator, Front dimension Ø 9 mm

Switching action	Contacts	Terminal	Part No.	Wiring diagram	Component Layout
Momentary	1 NO	Soldering terminal	18-137.035	133	7
	1 NC	Soldering terminal	18-138.035	131	7
Maintained	1 NO	Soldering terminal	18-237.035	134	7
	1 NC	Soldering terminal	18-238.035	132	7

Contacts: NC = Normally closed, NO = Normally open

Wiring diagrams

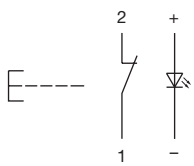

Wiring diagram 131

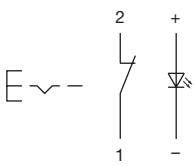

Wiring diagram 132

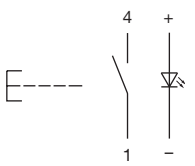

Wiring diagram 133

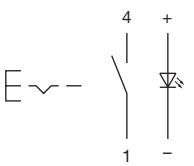

Wiring diagram 134

Component layouts

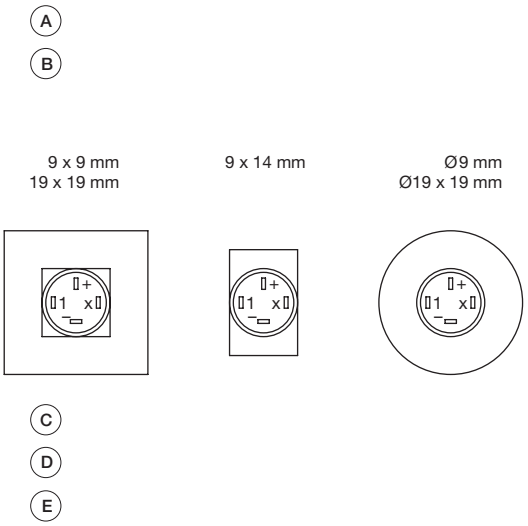

Component layout 7

A = Terminals (rear side)
B = Illuminated pushbutton
C = x = Contact No.
D = 2 = Normally open
E = 4 = Normally close

Come take a look at our LinkedIn profile today! *Be sure to give us a follow so that you can fully interact with us.*

https://www.linkedin.com/company/eao/

www.eao.com

eao

Your Expert Partner for **Human Machine Interfaces**

01
02
03
04
09
14
17
18
19
22
31
41
45
51
56
57
61
70
71
82
84
92
96

Illuminated pushbutton rectangular, IP40

Product can differ from the current configuration.

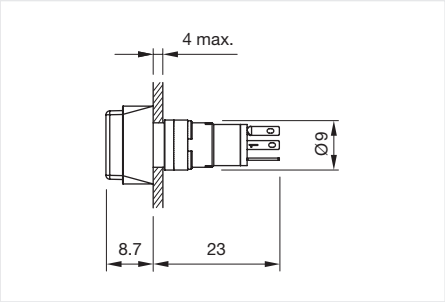

Dimensions [mm]

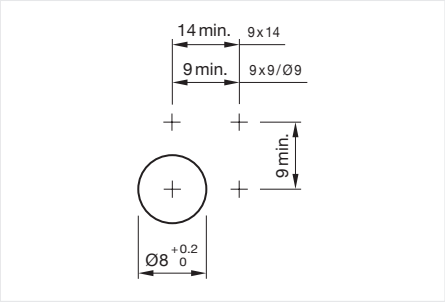

Mounting cut-outs [mm]

Equipment consisting of (schematic overview)

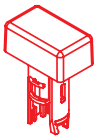

Lens Page 392

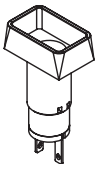

Actuator

Fixing nut

Each Part Number listed below includes all the black components shown in the 3D-drawing.

To obtain a complete unit, please select the red components from the pages shown.

Actuator, Front dimension 14 mm x 9 mm

Switching action	Contacts	Terminal	Part No.	Wiring diagram	Component Layout
Momentary	1 NO	Soldering terminal	18-147.035	133	7
	1 NC	Soldering terminal	18-148.035	131	7
Maintained	1 NO	Soldering terminal	18-247.035	134	7
	1 NC	Soldering terminal	18-248.035	132	7

Contacts: NC = Normally closed, NO = Normally open

Wiring diagrams

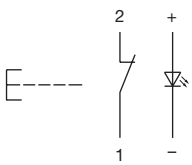

Wiring diagram 131

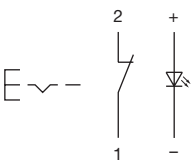

Wiring diagram 132

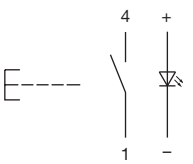

Wiring diagram 133

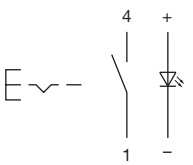

Wiring diagram 134

Component layouts

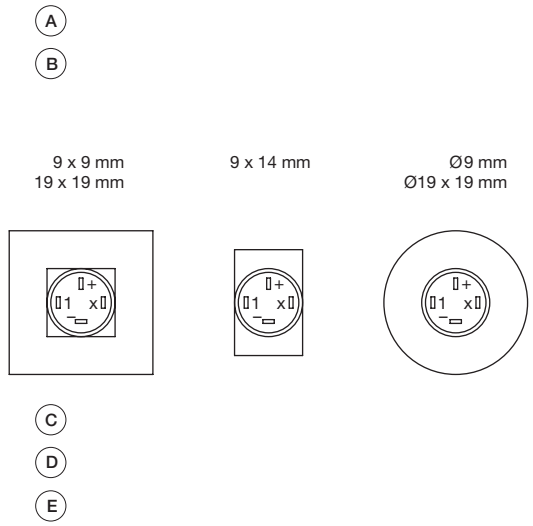

Component layout 7

A = Terminals (rear side)
B = Illuminated pushbutton
C = x = Contact No.
D = 2 = Normally open
E = 4 = Normally close

01
02
03
04
09
14
17
18
19
22
31
41
45
51
56
57
61
70
71
82
84
92
96

Illuminated pushbutton round, IP40

Product can differ from the current configuration.

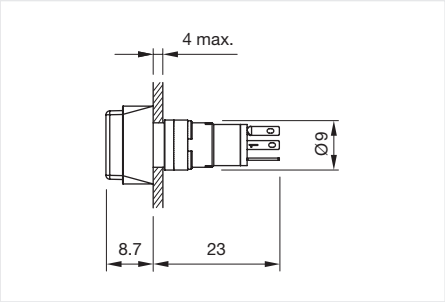

Dimensions [mm]

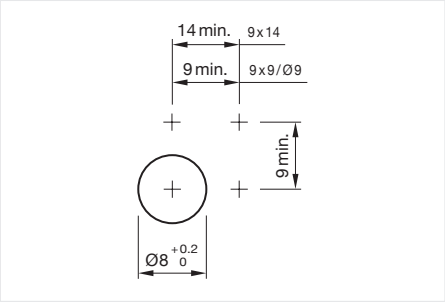

Mounting cut-outs [mm]

Equipment consisting of (schematic overview)

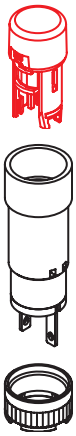

Lens Page 392

Actuator

Fixing nut

Each Part Number listed below includes all the black components shown in the 3D-drawing.

To obtain a complete unit, please select the red components from the pages shown.

Actuator, Front dimension Ø 9 mm

Switching action	Contacts	Terminal	Part No.	Wiring diagram	Component Layout
Momentary	1 NO	Soldering terminal	18-137.035	133	7
	1 NC	Soldering terminal	18-138.035	131	7
Maintained	1 NO	Soldering terminal	18-237.035	134	7
	1 NC	Soldering terminal	18-238.035	132	7

Contacts: NC = Normally closed, NO = Normally open

Wiring diagrams

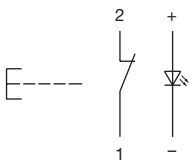

Wiring diagram 131

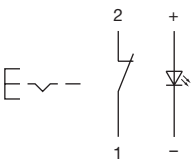

Wiring diagram 132

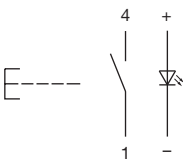

Wiring diagram 133

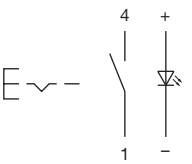

Wiring diagram 134

Component layouts

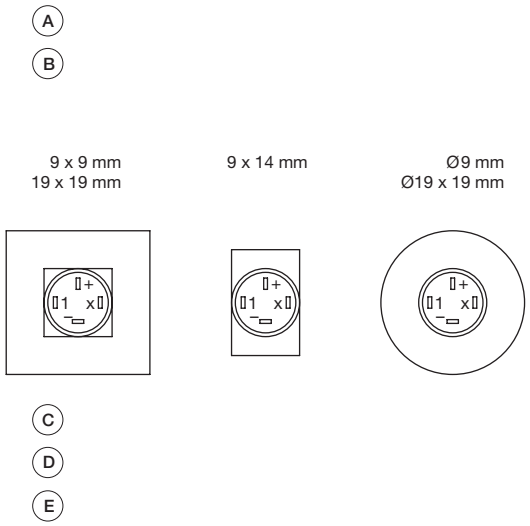

Component layout 7

A = Terminals (rear side)
B = Illuminated pushbutton
C = x = Contact No.
D = 2 = Normally open
E = 4 = Normally close

Come take a look at our YouTube profile today! *Be sure to give us a follow so that you can fully interact with us.*

https://www.youtube.com/user/eaoswitches

www.eao.com

eao

Your Expert Partner for **Human Machine Interfaces**

01
02
03
04
09
14
17
18
19
22
31
41
45
51
56
57
61
70
71
82
84
92
96

Indicator rectangular, IP40

Product can differ from the current configuration.

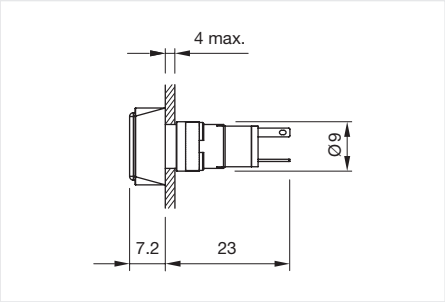

Dimensions [mm]

General information

- Luminosity and wave length variations caused by LED manufacturing processes may cause slight differences regarding the illumination. The customer has to decide what resistor shall be used to the LED

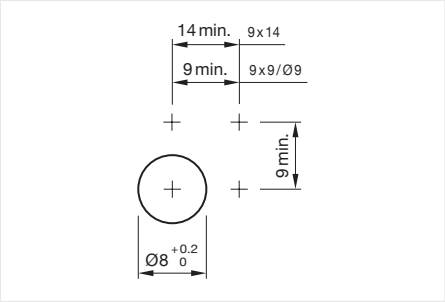

Mounting cut-outs [mm]

Equipment consisting of (schematic overview)

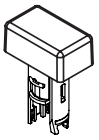

Lens

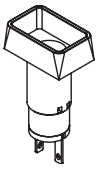

Actuator

Fixing nut

Each Part Number listed below includes all the black components shown in the 3D-drawing.

To obtain a complete unit, please select the red components from the pages shown.

Actuator, Front dimension 14 mm x 9 mm

Operating voltage	Illumination colour	Lens colour	Lens shape	Terminal	Part No.	Wiring diagram	Com-ponent Layout
Customer specific	Green	Green	flush	Soldering terminal	18-040.0055L	130	6
24 V DC ±10 %		Green	flush	Soldering terminal	18-042.0055L	130	6

Wiring diagrams

Wiring diagram 130

Component layouts

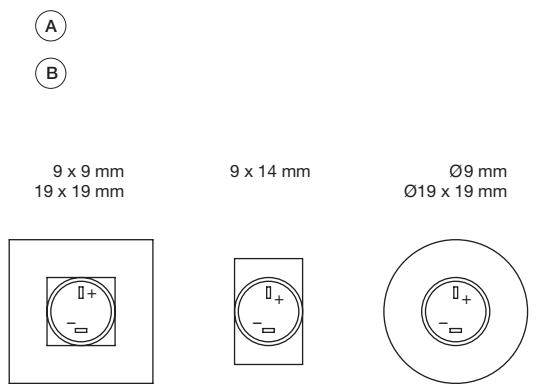

Component layout 6

A = Terminals (rear side)
B = Indicator

Indicator round, IP40

Product can differ from the current configuration.

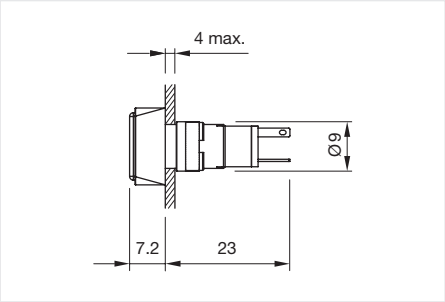

Dimensions [mm]

General information

- Luminosity and wave length variations caused by LED manufacturing processes may cause slight differences regarding the illumination. The customer has to decide what resistor shall be used to the LED

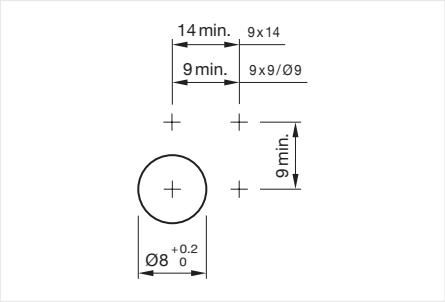

Mounting cut-outs [mm]

Equipment consisting of (schematic overview)

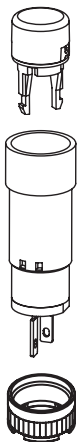

Each Part Number listed below includes all the black components shown in the 3D-drawing.

Actuator, Front dimension Ø 9 mm

Operating voltage	Illumination colour	Lens colour	Lens shape	Terminal	Part No.	Wiring diagram	Component Layout
Customer specific	Red	Red	flush	Soldering terminal	18-030.0052L	130	6
	White	Yellow	flush	Soldering terminal	18-030.0054L	130	6
	Green	Green	flush	Soldering terminal	18-030.0055L	130	6
12 V DC ±10 %	Red	Red	flush	Soldering terminal	18-031.0052L	130	6
	Green	Green	flush	Soldering terminal	18-031.0055L	130	6
24 V DC ±10 %	Red	Red	flush	Soldering terminal	18-032.0052L	130	6
	Yellow	Yellow	flush	Soldering terminal	18-032.0054L	130	6
	Green	Green	flush	Soldering terminal	18-032.0055L	130	6

Wiring diagrams

Wiring diagram 130

Component layouts

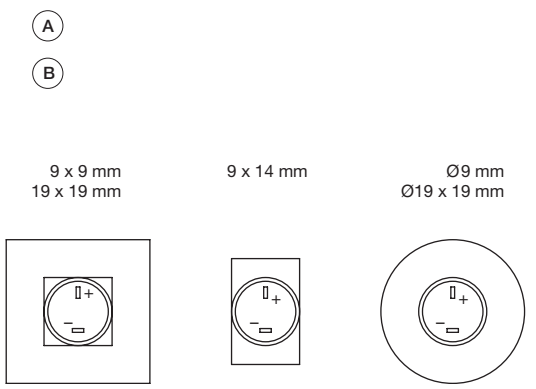

Component layout 6

A = Terminals (rear side)
B = Indicator

On our website you can download technical data, assembly instructions, catalogs, brochures *and much more.*

www.eao.com

eao

Your Expert Partner for **Human Machine Interfaces**

01
02
03
04
09
14
17
18
19
22
31
41
45
51
56
57
61
70
71
82
84
92
96

Lens with LED raised design

Lens material	Lens colour	Lens optics	Lens shape	Lens illumination	Dimensions	Part No.	Wiring diagram
Plastic	Green	translucent	flush	illuminative	7,5 mm x 12.5 mm	18-941.5L	139
	Red	translucent	flush	illuminative	Ø 7.5 mm	18-931.2L	139
	Yellow	translucent	flush	illuminative	Ø 7.5 mm	18-931.4L	139
	Green	translucent	flush	illuminative	Ø 7.5 mm	18-931.5L	139

Additional information

- Luminosity and wave length variations caused by LED manufacturing processes may cause slight differences regarding the illumination. The customer has to decide what resistor shall be used to the LED
- Red LED Vf = 2.0 V DC, yellow lens with white LED Vf = 3.2 V, green LED Vf = 3.2 V

Wiring diagrams

Wiring diagram 139

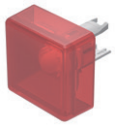

Lens with LED flush design

Lens material	Lens colour	Lens optics	Lens shape	Lens illumination	Dimensions	Part No.	Wiring diagram
Plastic	Red	translucent	flush	illuminative	13.8 mm x 13.8 mm	18-981.2L	139
	Yellow	translucent	flush	illuminative	13.8 mm x 13.8 mm	18-981.4L	139
	Green	translucent	flush	illuminative	13.8 mm x 13.8 mm	18-981.5L	139
	Red	translucent	flush	illuminative	Ø 13.8 mm	18-961.2L	139
	Yellow	translucent	flush	illuminative	Ø 13.8 mm	18-961.4L	139
	Green	translucent	flush	illuminative	Ø 13.8 mm	18-961.5L	139

Additional information

- Luminosity and wave length variations caused by LED manufacturing processes may cause slight differences regarding the illumination. The customer has to decide what resistor shall be used to the LED
- Red LED Vf = 2.0 V DC, yellow lens with white LED Vf = 3.2 V, green LED Vf = 3.2 V

Wiring diagrams

Wiring diagram 139

Lens without LED raised design

Lens material	Lens colour	Lens optics	Lens shape	Lens illumination	Dimensions	Part No.
Plastic	Green	translucent	flush	illuminative	7.5 mm x 12.5 mm	18-942.5
	White	translucent	flush	illuminative	7.5 mm x 12.5 mm	18-942.9
	Black	opaque	flush	non illuminative	Ø 7.5 mm	18-932.0
	Red	translucent	flush	illuminative	Ø 7.5 mm	18-932.2
	Yellow	translucent	flush	illuminative	Ø 7.5 mm	18-932.4
	Green	translucent	flush	illuminative	Ø 7.5 mm	18-932.5
	Grey	opaque	flush	non illuminative	Ø 7.5 mm	18-932.8

Lens without LED flush design

Lens material	Lens colour	Lens optics	Lens shape	Lens illumination	Dimensions	Part No.
Plastic	Black	opaque	flush	non illuminative	13.8 mm x 13.8 mm	18-982.0
	Red	translucent	flush	illuminative	13.8 mm x 13.8 mm	18-982.2
	Yellow	translucent	flush	illuminative	13.8 mm x 13.8 mm	18-982.4
	Green	translucent	flush	illuminative	13.8 mm x 13.8 mm	18-982.5
	Grey	opaque	flush	non illuminative	13.8 mm x 13.8 mm	18-982.8
	White	translucent	flush	illuminative	13.8 mm x 13.8 mm	18-982.9
	Black	opaque	flush	non illuminative	Ø 13.8 mm	18-962.0
	Red	translucent	flush	illuminative	Ø 13.8 mm	18-962.2
	Yellow	translucent	flush	illuminative	Ø 13.8 mm	18-962.4
	Green	translucent	flush	illuminative	Ø 13.8 mm	18-962.5
	Grey	opaque	flush	non illuminative	Ø 13.8 mm	18-962.8
	White	translucent	flush	illuminative	Ø 13.8 mm	18-962.9

Front bezel set flush design

Product attributes	Front bezel material	Front bezel colour	Mounting cut-out	Dimensions	Part No.
For square lens	Plastic	Black	15.8 mm x 15.8 mm	19 mm x 19 mm	18-920.1
For round lens	Plastic	Black	15.8 mm x 15.8 mm	19 mm x 19 mm	18-920.2
	Plastic	Black	Ø 16 mm	Ø 19 mm	18-920.3

01
02
03
04
09
14
17
18
19
22
31
41
45
51
56
57
61
70
71
82
84
92
96

Front side

Blind plug

Dimensions	Material	Colour	Mounting cut-out	Part No.
9 mm x 9 mm	plastic	Black	Ø 8 mm	19-948.0
Ø 9 mm	plastic	Black	Ø 8 mm	19-949.0

Rear side

PCB plug-in base

Terminal	Pins	Part No.	Com-ponent Layout
PCB terminal	Axial	18-945	14
	90° angled	18-946	15

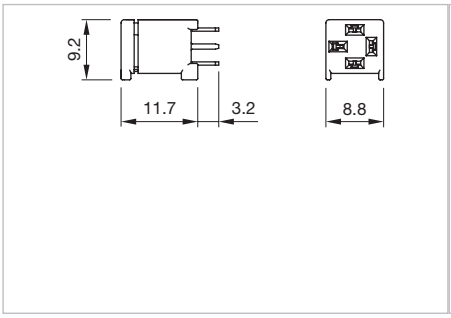

Dimensions [mm]
for Part No. 18-945

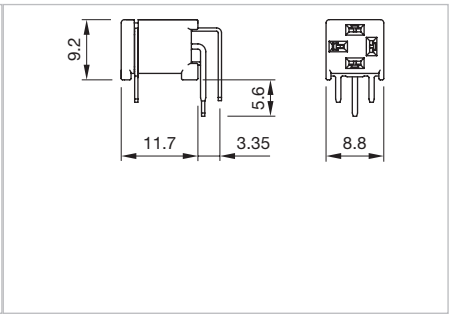

Dimensions [mm]
for Part No. 18-946

Component layouts

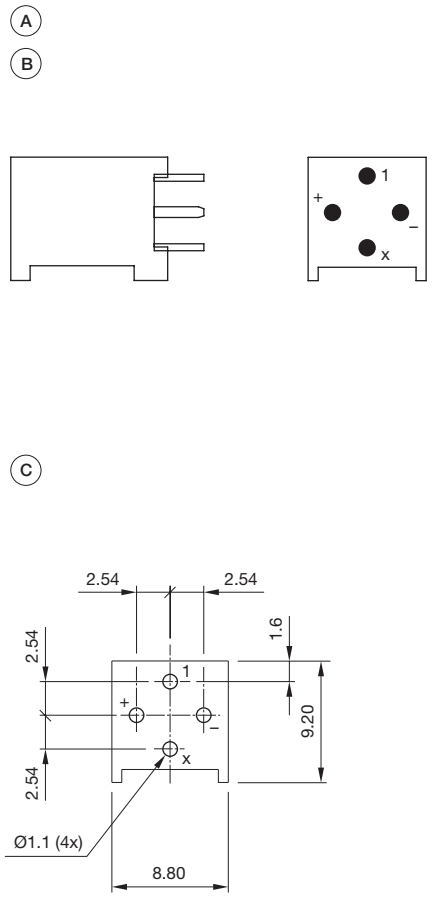

Component layout 14

Dimensions [mm]
A = Axial socket
B = Occupancy plan (component side)
C = Drilling plan (component side)

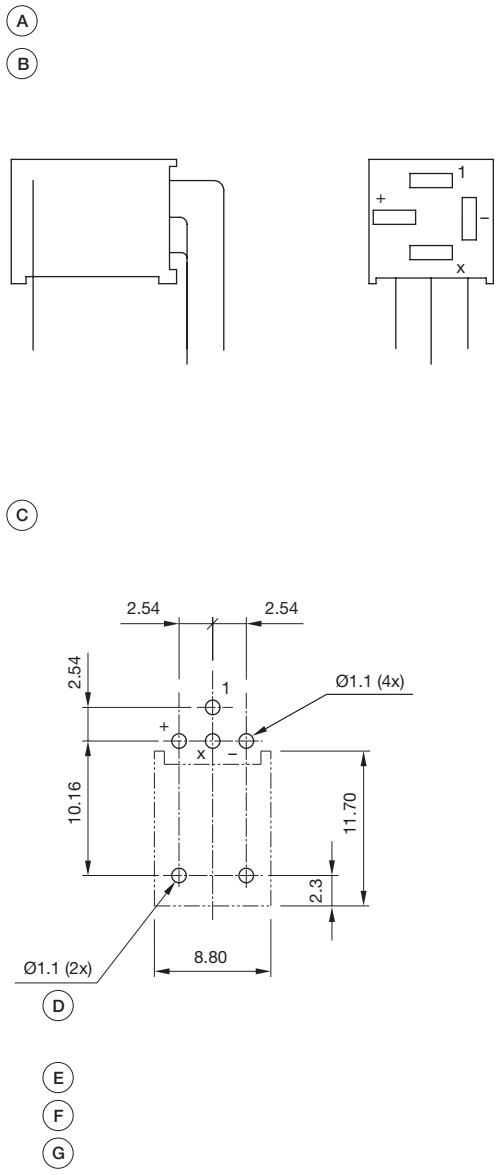

Component layout 15

Dimensions [mm]
A = Socket 90° angled
B = Occupancy plan (component side)
C = Drilling plan (component side)
D = non-metallic
E = x = Contact No.
F = 2 = Normaly open
G = 4 = Normaly close

Mounting

Fixing nut

Dimensions	Material	Thread	Part No.
Ø 9 mm	metal	M8 x 13 mm	19-991

Lens remover

Material	Part No.
metal / plastic	18-910

Mounting tool

Product attributes	Material	Part No.
For fixing nut long Part No. 19-991	metal	19-905

01
02
03
04
09
14
17
18
19
22
31
41
45
51
56
57
61
70
71
82
84
92
96

Actuator with snap-action switching element

Switching system

The snap-action switching system was designed for switching low powers in electronic circuits.
Single-break snap-action contact.

Material

Lens
Plastic

Material of contact
Gold contact on nickel plating

Actuator housing
Plastic, colour black

Mechanical characteristics

Terminals
The terminals can be used as soldering terminals.

Max. wire diameter	2 x 0.5 mm²
Max. wire cross-section of stranded cable	1 x 0.75 mm²
Wire cross-section of terminal	1.6 x 0.4 mm²

Tightening torque
For fixing nut max. 0.2 Nm

Actuating force
1.4 N

Actuating travel
Approx. 2.2 mm ± 0.2 mm

Mechanical lifetime

Momentary action	2 million cycles of operation
Maintained action	1 million cycles of operation

Electrical characteristics

Illumination

Operating voltage LED:	12 VDC ± 10 %	
	24 VDC ± 10 %	
	customer-specific *)	

*) The series resistance for LEDs need to be determined and integrated by customers.

Operating data LED:	red	2.0 VDC @ 20mA
	yellow	2.1 VDC @ 20mA
	green	3.2 VDC @ 20mA
	white	3.2 VDC @ 20mA

Electrical life
≥ 500 000 cycles of operation at 30 VDC, 100 mA, according to IEC 61058-1

Switching voltage and switching current
100 mA at 42 VAC / VDC

Electric strength
500 VAC, 50 Hz, 1 minute between all terminals and earth, as per IEC 60512-2-11

Ambient conditions

Storage temperature
– 40 °C … + 80 °C

Operating temperature
– 25 °C … + 65 °C

Protection degree
IP40 front side, as per IEC 60529

Shock resistance
(Single impacts, semi-sinusodial)
50 g for 11 ms, as per DIN EN 60068-2-27

Vibration resistance
(sinusoidal)
10 g at 10 – 2000 Hz, amplitude 0.75 mm, as per IEC 60512-4-4

Approvals

Conformities
2014 / 35 / EC (LVD) for version 230 VAC
2011 / 65 / EC (RoHS)

EAO reserves the right to alter specifications without further notice.

Suppressor circuits

When switching inductive loads such as relays, DC motors, and DC solenoids, it is always important to absorb surges (e.g. with a diode) to protect the contacts. When these inductive loads are switched off, a counter emf can severely damage switch contacts and greatly shorten lifetime.

Fig. 1 shows an inductive load with a free-wheeling diode connected in parallel. This free-wheeling diode provides a path for the inductor current to flow when the current is interrupted by the switch. Without this free-wheeling diode, the voltage across the coil will be limited only by dielectric breakdown voltages of the circuit or parasitic elements of the coil. This voltage can be kilovolts in amplitude even when nominal circuit voltages are low (e.g. 12 VDC) see Fig. 2.

The free-wheeling diode should be chosen so that the reverse breakdown voltage is greater than the voltage driving the inductive load. The DC blocking voltage (VR) of the free-wheeling diode can be found in the datasheet of a diode. The forward current should be equal or greater than the maximum current flowing through the load.

To get an efficient protection, the free-wheeling diode must be connected as close as possible to the inductive load!

Switching with inductive load
Fig. 1

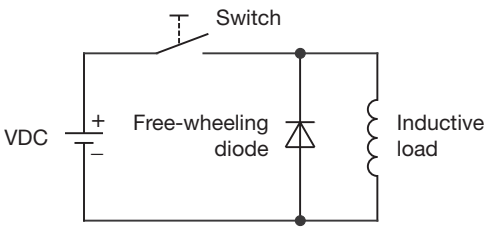
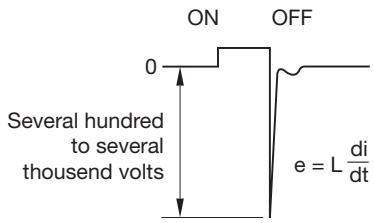
Counter EMF
over load without free-wheeling diode
Fig. 2