CLD-2412-INT-EB25

12V / 2A Wall mounted type AC/DC adaptor

Features:

- *Universal AC input / Full range*
- *Wall mounted type, Isolation class II design*
- *ErP step II / CEC level VI compliance*
- *No load power consumption P < 0.075W*
- *Protections: Overload / Short circuit / Over Temperature*

ELECTRICAL SPECIFICATION

MODEL	CLD-2412-INT-EB25
OUTPUT	
Rated Voltage	12V
Rated Current	2A
Current Range	0 ÷ 2A
Rated Power	24W
Line Regulation	± 2%
Load Regulation	± 5%
Tolerance [3]	± 8%
Ripple & Noise (max.) [2]	$120mV_{P-P}$
Setup, Rise Time [4]	1000ms, 20ms / 230VAC at full load
Hold up Time (typ.)	50ms / 230VAC at full load
INPUT	
Voltage Range	90 ÷ 264VAC
Frequency Range	47 ÷ 63Hz
Efiiciency (typ.)	87,47%
AC Current (typ.)	0.49A / 115VAC, 0.23A / 230VAC
No load Power Consumption (max.)	0.075W
PROTECTIONS	
Overload	Range: 140 ÷ 170%
	Type: hiccup mode, auto-recovery.
Short Circuit	Type: hiccup mode, auto-recovery.
Over voltage	Range: 12 ÷ 18V
	Type: hiccup mode, auto-recovery

CLD-2412-INT-EB25

12V / 2A Wall mounted type AC/DC adaptor

WORKING ENVIRONMENT

Working Temperature	0°C ÷ 40°C
Working Humidity	10 ÷ 90% RH non-condensing
Storage Temperature and Humidity	-20°C ÷ 85°C, 5 ÷ 90% RH non-condensing

SAFETY and EMC REGULATIONS

Safety Standards	Compliance to EN 62368
Withstand Voltage	IN/OUT: 3.6kVAC
Isolation Resistance	IN/OUT: 100MΩ/500VDC/25°C/70%
EMC Emission	Compliance to EN55032
EMC Immunity	Compliance to EN61000-4-2, -3, -4, -5
Harmonic Current	Compliance to EN61000-3-3; EN61000-3-2

MECHANICAL SPECIFICATION

Wire and plug	Wire: 20AWG, length = 105cm ±50mm	Plug: IEC C8
	Wire: 22AWG, length = 105cm ±50mm	Plug: 2.5/5.5, positive inside
Dimensions	95 x 68 x 31mm (L x W x H)	
Net Weight / gross	180g / 209g	

1. All parameters NOT specially mentioned are measured at 230VAC input, rated load and 25°C of ambient temperature.
2. Ripple & noise are measured at 20MHz of bandwidth by using a 12" twisted pair-wire terminated with a 0.1μF i 47μF parallel capacitor.
3. Tolerance includes set up tolerance, line regulation and load regulation.
4. Setup and rise time is measured from 0 to 90% rated output voltage.
5.Power supply is considered as component not indented to apply by end-user. Power supply meets safety and EMC standards however the final equipment with power supply must be re-quality to comply with EMC Directives.

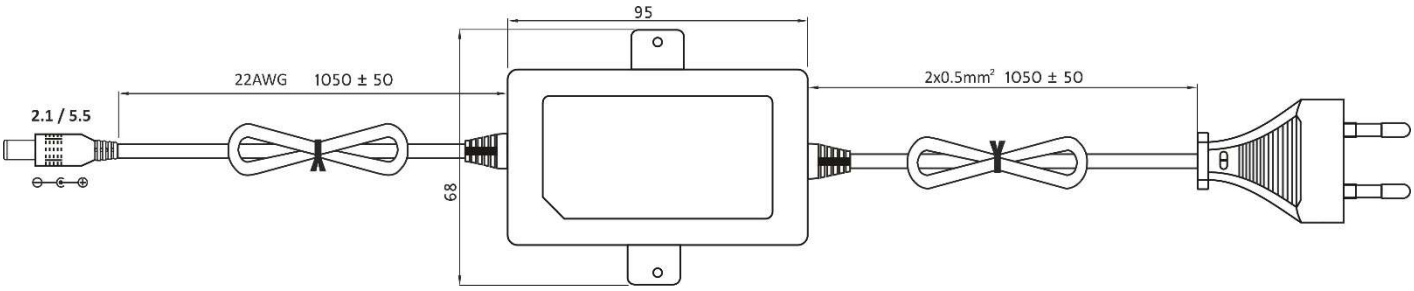

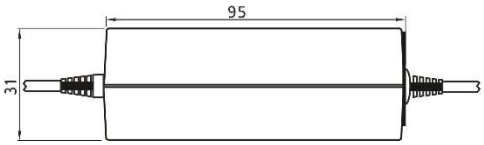

CLD-2412-INT-EB25

12V / 2A Wall mounted type AC/DC adaptor

MECHANICAL SPECIFICATION - Wire and plug

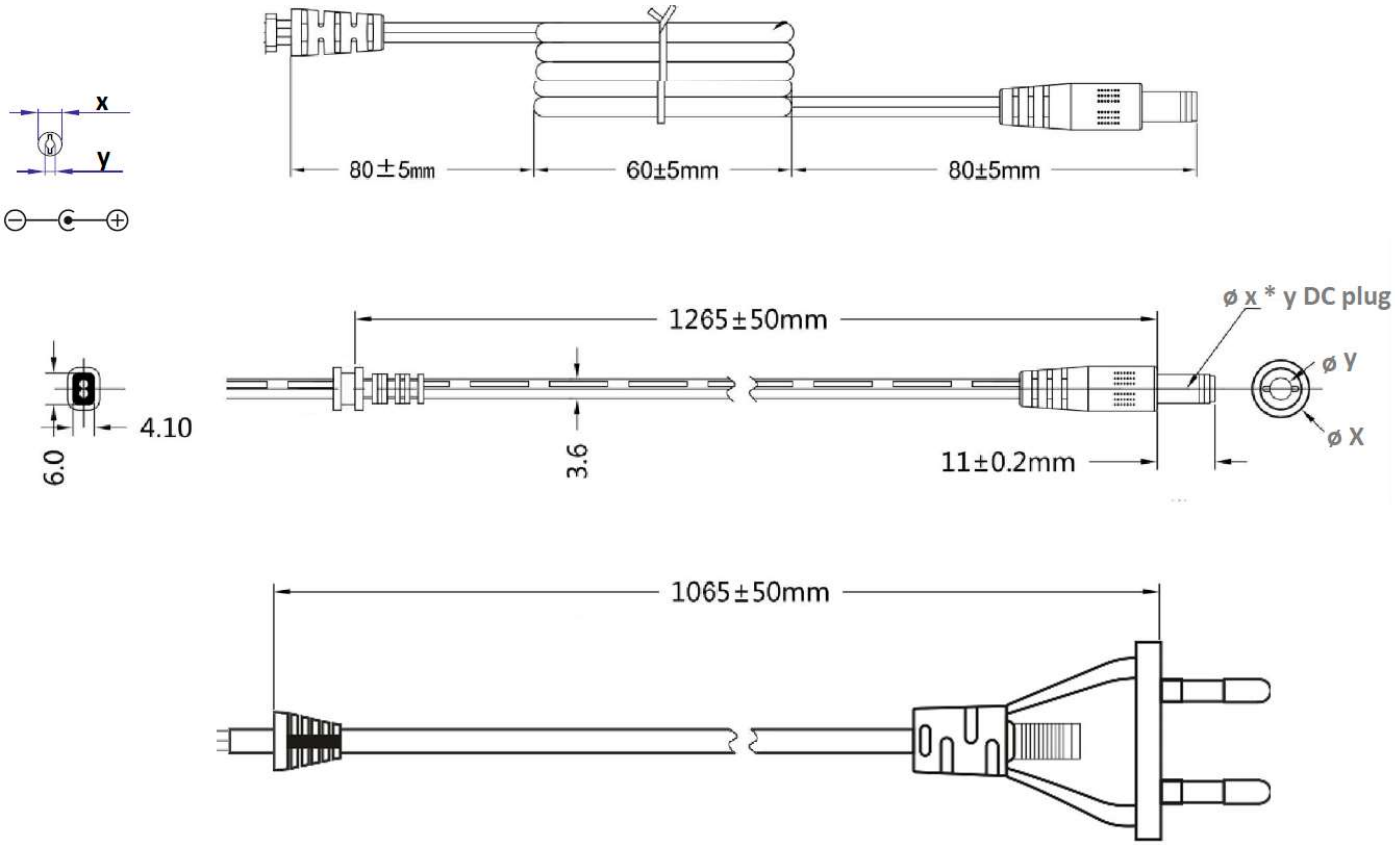

*MODEL	DC PLUG	X [mm}	Y [mm]	Polarity
CLD-2412-INT-EB	5.5x2.1mm	5.5	2.1	center positive
CLD-2412-INT-EB25	**5.5x2.5mm**	**5.5**	**2.5**	**center positive**
CLD-2412-INT-EB13	3.5x1.3mm	3.5	1.3	center positive
CLD-2412-INT-EB40	4.0x1.7mm	4.0	1.7	center positive
CLD-2412-INT-EB48	4.8x1.7mm	4.8	1.7	center positive
CLD-2412-INT-EB-CN	5.5x2.1mm	5.5	2.1	center negative
CLD-2412-INT-EB25-CN	5.5x2.5mm	5.5	2.5	center negative
CLD-2412-INT-EB13-CN	3.5x1.3mm	3.5	1.3	center negative
CLD-2412-INT-EB40-CN	4.0x1.7mm	4.0	1.7	center negative
CLD-2412-INT-EB48-CN	4.8x1.7mm	4.8	1.7	center negative