ESD, X7R Dielectric, 16 – 250 VDC (Commercial & Automotive Grade)

KEMET a YAGEO company

Overview

The KEMET electrostatic discharge (ESD) rated commercial and automotive grade surface mount capacitors in X7R dielectric are suited for a variety of applications where electrostatic discharge (ESD) events during assembly or operation could damage the capacitor or the circuit. These ESD rated capacitors provide the ability to design within a given ESD criteria per the human body model (HBM) AEC Q200–002 criteria. The KEMET automotive grade capacitors also meet the other demanding Automotive Electronics Council's AEC–Q200 qualification requirements.

The X7R dielectric features a 125°C maximum operating temperature and is considered “temperature stable.” The Electronics Industries Alliance (EIA) characterizes X7R dielectric as a Class II material. Components of this classification are fixed, ceramic dielectric capacitors, suited for bypass and decoupling applications and for frequency discriminating circuits, where Q and stability of capacitance characteristics are not critical. The X7R dielectric exhibits a predictable change in capacitance with respect to time and voltage, and boasts a minimal change in capacitance compared to its value at 25°C. Capacitance change is limited to ±15% from −55°C to +125°C.

Benefits

- AEC-Q200 automotive qualified
- ESD qualified per HBM - AEC Q200-002
- Available in package size EIA 0402, 0603, 0805, 1206
- DC Voltage ratings of 16 V, 25 V, 50 V, 63 V, 100 V, 200 V and 250 V
- Capacitance range from 1 nF to 2.2 µF
- −55°C to +125°C operating temperature range
- Lead (Pb)-free, RoHS and REACH compliant
- Available capacitance tolerances of ±5%, ±10% and ±20%
- 100% pure matte tin-plated termination finish allowing for excellent solderability
- Non-polar devices, minimizing installation concerns
- Flexible termination option available

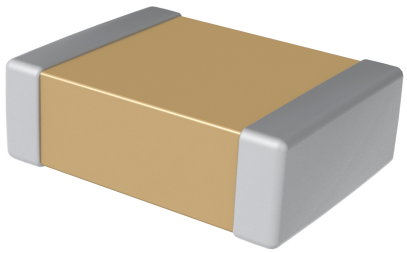

Click image above for interactive 3D content

Open PDF in Adobe Reader for full functionality

Applications

Typical applications include: electrostatic discharge (ESD), integrated circuit (IC) protection, radio frequency (RF) filtering function, input and output automotive applications such as controllers, navigation systems, airbags and keyless systems.

© KEMET Electronics Corporation • KEMET Tower • One East Broward Boulevard
Fort Lauderdale, FL 33301 USA • 954-766-2800 • www.kemet.com

sales@prom-elec.com / ООО ПРОМЭЛЕКТРОНИКА

Ordering Information

C	0603	C	104	J	3	R	E	C	AUTO
Ceramic	Case Size (L" x W")	Specification/ Series	Capacitance Code (pF)	Capacitance Tolerance	Rated Voltage (VDC)	Dielectric	Failure Rate/ Design	Termination Finish[2]	Packaging/ Grade (C-Spec)
	0402 0603 0805 1206	C = Standard X = Flexible Termination	Two significant digits and number of zeros	J = ±5% K = ±10% M = ±20%	4 = 16 3 = 25 5 = 50 M = 63 1 = 100 2 = 200 A = 250	R = X7R	E = ESD	C = 100% Matte Sn	See "Packaging C-Spec Ordering Options Table"

[1] *The flexible termination option is not available on EIA 0402 case size product. "C" must be used in the 6th character position when ordering this case size.*

[2] *Additional termination finish options may be available. Contact KEMET for details.Applications*

Table 1A – Capacitance Range/Selection Waterfall

Capacitance	Cap Code	Case Size/ Series	C0402C			C0603C					
		Rated Voltage (VDC)	16	25	50	16	25	50	63	100	200
		Voltage Code	4	3	5	4	3	5	M	1	2
		Cap Tolerance	ESD Level per AEC–Q200								
1.0 nF	102	J = ±5% K = ±10% M = ±20%	2 kV	2 kV	2 kV	25 kV	25 kV	25 kV	25 kV	25 kV	25 kV
1.5 nF	152		4 kV	4 kV	4 kV	12 kV	12 kV	12 kV	12 kV	12 kV	12 kV
2.2 nF	222		6 kV	6 kV	6 kV	25 kV	25 kV	25 kV	25 kV	25 kV	25 kV
3.3 nF	332		8 kV	8 kV	8 kV	12 kV	12 kV	12 kV	12 kV	12 kV	12 kV
4.7 nF	472		8 kV	8 kV	8 kV	16 kV	16 kV	16 kV	16 kV	16 kV	16 kV
6.8 nF	682		4 kV	4 kV	4 kV	25 kV	25 kV	25 kV	25 kV	25 kV	25 kV
10 nF	103		6 kV	6 kV	6 kV	25 kV	25 kV	25 kV	25 kV	25 kV	25 kV
15 nF	153		6 kV	6 kV	6 kV	16 kV	16 kV	16 kV	16 kV	16 kV	
22 nF	223		8 kV	8 kV	8 kV	16 kV	16 kV	16 kV	16 kV	16 kV	
33 nF	333		8 kV	8 kV		25 kV	25 kV	25 kV	25 kV	25 kV	
47 nF	473		12 kV	12 kV		25 kV	25 kV	25 kV	25 kV	25 kV	
68 nF	683		12 kV			25 kV	25 kV	25 kV			
100 nF	104		16 kV			25 kV	25 kV	25 kV			
150 nF	154					25 kV	25 kV	25 kV			
220 nF	224					25 kV	25 kV				

Table 1A – Capacitance Range/Selection Waterfall (cont.)

Capacitance	Cap Code	Case Size/ Series	C0805C							C1206C						
		Rated Voltage (VDC)	16	25	50	63	100	200	250	16	25	50	63	100	200	250
		Voltage Code	4	3	5	M	1	2	A	4	3	5	M	1	2	A
		Cap Tolerance	ESD Level per AEC–Q200													
1.0 nF	102		12 kV	12 kV	12 kV	12 kV	12 kV	12 kV	12 kV	4 kV	4 kV	4 kV	4 kV	4 kV	4 kV	4 kV
1.5 nF	152		4 kV	4 kV	4 kV	4 kV	4 kV	4 kV	4 kV	6 kV	6 kV	6 kV	6 kV	6 kV	6 kV	6 kV
2.2 nF	222		4 kV	4 kV	4 kV	4 kV	4 kV	4 kV	4 kV	8 kV	8 kV	8 kV	8 kV	8 kV	8 kV	8 kV
3.3 nF	332		16 kV	16 kV	16 kV	16 kV	16 kV	16 kV	16 kV	16 kV	16 kV	16 kV	16 kV	16 kV	16 kV	16 kV
4.7 nF	472		25 kV	25 kV	25 kV	25 kV	25 kV	25 kV	25 kV	25 kV	25 kV	25 kV	25 kV	25 kV	25 kV	25 kV
6.8 nF	682		25 kV	25 kV	25 kV	25 kV	25 kV	25 kV	25 kV	25 kV	25 kV	25 kV	25 kV	25 kV	25 kV	25 kV
10 nF	103		25 kV	25 kV	25 kV	25 kV	25 kV	25 kV	25 kV	25 kV	25 kV	25 kV	25 kV	25 kV	25 kV	25 kV
15 nF	153		25 kV	25 kV	25 kV	25 kV	25 kV	25 kV	25 kV	25 kV	25 kV	25 kV	25 kV	25 kV	25 kV	25 kV
22 nF	223		25 kV	25 kV	25 kV	25 kV	25 kV	25 kV	25 kV	25 kV	25 kV	25 kV	25 kV	25 kV	25 kV	25 kV
33 nF	333	J = ±5%	25 kV	25 kV	25 kV	25 kV	25 kV	25 kV		25 kV	25 kV	25 kV	25 kV	25 kV	25 kV	25 kV
47 nF	473	K = ±10%	25 kV	25 kV	25 kV	25 kV	25 kV	25 kV		25 kV	25 kV	25 kV	25 kV	25 kV	25 kV	25 kV
68 nF	683	M = ±20%	25 kV	25 kV	25 kV	25 kV	25 kV			25 kV	25 kV	25 kV	25 kV	25 kV	25 kV	25 kV
100 nF	104		25 kV	25 kV	25 kV	25 kV	25 kV			25 kV	25 kV	25 kV	25 kV	25 kV	25 kV	25 kV
150 nF	154		25 kV	25 kV	25 kV	25 kV	25 kV			25 kV	25 kV	25 kV	25 kV	25 kV	25 kV	
220 nF	224		25 kV	25 kV	25 kV	25 kV	25 kV			25 kV	25 kV	25 kV	25 kV	25 kV		
330 nF	334		25 kV	25 kV	25 kV					25 kV	25 kV	25 kV	25 kV	25 kV		
470 nF	474		25 kV	25 kV	25 kV					25 kV	25 kV	25 kV	25 kV	25 kV		
680 nF	684		25 kV	25 kV	25 kV					25 kV	25 kV	25 kV				
1.0 µF	105		25 kV	25 kV						25 kV	25 kV	25 kV				
1.5 µF	155		25 kV							25 kV	25 kV	25 kV				
2.2 µF	225		25 kV							25 kV	25 kV	25 kV				

Packaging C-Spec Ordering Options Table

Packaging Type	Packaging/Grade Ordering Code (C-Spec)
Commercial Grade[1]	
Bulk Bag	Not required (blank)
7" Reel/Unmarked	TU
13" Reel/Unmarked	7411 (EIA 0603 and smaller case sizes) 7210 (EIA 0805 and larger case sizes)
7" Reel/Unmarked/2 mm pitch[2]	7081
13" Reel/Unmarked/2 mm pitch[2]	7082
Automotive Grade[3]	
7" Reel	AUTO
13" Reel/Unmarked	AUTO7411 (EIA 0603 and smaller case sizes) AUTO7210 (EIA 0805 and larger case sizes)
7" Reel/Unmarked/2 mm pitch[2]	3190
13" Reel/Unmarked/2 mm pitch[2]	3191

[1] Default packaging is "Bulk Bag." An ordering code C-Spec is not required for "Bulk Bag" packaging.
[1] The terms "Marked" and "Unmarked" pertain to laser marking option of capacitors. All packaging options labeled as "Unmarked" will contain capacitors that have not been laser marked. The option to laser mark is not available on these devices. For more information see "Capacitor Marking."
[2] The 2 mm pitch option allows for double the packaging quantity of capacitors on a given reel size. This option is limited to EIA 0603 (1608 metric) case size devices. For more information regarding 2 mm pitch option see "Tape & Reel Packaging Information."
[3] Reeling tape options (Paper or Plastic) are dependent on capacitor case size (L" x W") and thickness dimension. See "Chip Thickness/Tape & Reel Packaging Quantities" and "Tape & Reel Packaging Information."
[3] For additional information regarding "AUTO" C-Spec options, see "Automotive C-Spec Information."
[3] All automotive packaging C-Specs listed exclude the option to laser mark components. The option to laser mark is not available on these devices. For more information see "Capacitor Marking."

Automotive C-Spec Information

KEMET automotive grade products meet or exceed the requirements outlined by the Automotive Electronics Council. Details regarding test methods and conditions are referenced in document AEC–Q200, Stress Test Qualification for Passive Components. These products are supported by a Product Change Notification (PCN) and Production Part Approval Process warrant (PPAP).

Automotive products offered through our distribution channel have been assigned an inclusive ordering code C-Spec, "AUTO." This C-Spec was developed in order to better serve small and medium-sized companies that prefer an automotive grade component without the requirement to submit a customer Source Controlled Drawing (SCD) or specification for review by a KEMET engineering specialist. This C-Spec is therefore not intended for use by KEMET OEM automotive customers and are not granted the same "privileges" as other automotive C-Specs. Customer PCN approval and PPAP request levels are limited (see details below.)

Product Change Notification (PCN)

The KEMET product change notification system is used to communicate primarily the following types of changes:

- Product/process changes that affect product form, fit, function, and/or reliability
- Changes in manufacturing site
- Product obsolescence

KEMET Automotive C-Spec	Customer Notification Due To:		Days Prior To Implementation
	Process/Product change	Obsolescence*	
KEMET assigned[1]	Yes (with approval and sign off)	Yes	180 days minimum
AUTO	Yes (without approval)	Yes	90 days minimum

[1] *KEMET assigned C-Specs require the submittal of a customer SCD or customer specification for review. For additional information contact KEMET.*

Production Part Approval Process (PPAP)

The purpose of the Production Part Approval Process is:

- To ensure that supplier can meet the manufacturability and quality requirements for the purchased parts.
- To provide the evidence that all customer engineering design records and specification requirements are properly understood and fulfilled by the manufacturing organization.
- To demonstrate that the established manufacturing process has the potential to produce the part.

KEMET Automotive C-Spec	PPAP (Product Part Approval Process) Level				
	1	2	3	4	5
KEMET assigned[1]	●	●	●	●	●
AUTO			○		

[1] *KEMET assigned C-Specs require the submittal of a customer SCD or customer specification for review. For additional information contact KEMET.*

● Part number specific PPAP available
○ Product family PPAP only

Dimensions – Millimeters (Inches)

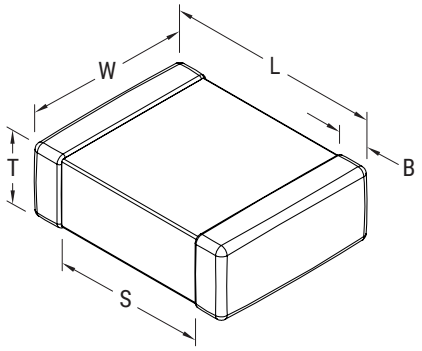

EIA Size Code	Metric Size Code	L Length	W Width	T Thickness	B Bandwidth	S Separation Minimum	Mounting Technique
Without Flexible Termination							
0402	1005	1.00 (0.040) ±0.05 (0.002)	0.50 (0.020) ±0.05 (0.002)	See Table 2 for Thickness	0.30 (0.012) ±0.10 (0.004)	0.30 (0.012)	Solder reflow only
0603	1608	1.60 (0.063) ±0.15 (0.006)	0.80 (0.032) ±0.15 (0.006)		0.35 (0.014) ±0.15 (0.006)	0.70 (0.028)	Solder wave or Solder reflow
0805	2012	2.00 (0.079) ±0.20 (0.008)	1.25 (0.049) ±0.20 (0.008)		0.50 (0.02) ±0.25 (0.010)	0.75 (0.030)	
1206	3216	3.20 (0.126) ±0.20 (0.008)	1.60 (0.063) ±0.20 (0.008)		0.50 (0.02) ±0.25 (0.010)	N/A	
With Flexible Termination							
0603	1608	1.60 (0.063) ±0.17 (0.007)	0.80 (0.032) ±0.15 (0.006)	See Table 2 for Thickness	0.45 (0.018) ±0.15 (0.006)	0.58 (0.023)	Solder wave or Solder reflow
0805	2012	2.00 (0.079) ±0.30 (0.012)	1.25 (0.049) ±0.30 (0.012)		0.50 (0.02) ±0.25 (0.010)	0.75 (0.030)	
1206	3216	3.30 (0.130) ±0.40 (0.016)	1.60 (0.063) ±0.35 (0.013)		0.60 (0.024) ±0.25 (0.010)	N/A	

Qualification/Certification

Commercial grade products are subject to internal qualification. Details regarding test methods and conditions are referenced in Table 4, Performance & Reliability.

Automotive grade products meet or exceed the requirements outlined by the Automotive Electronics Council. Details regarding test methods and conditions are referenced in document AEC–Q200, Stress Test Qualification for Passive Components. For additional information regarding the Automotive Electronics Council and AEC–Q200, please visit their website at www.aecouncil.com.

Environmental Compliance

Lead (Pb)-free, RoHS, and REACH compliant without exemptions.

Electrical Parameters/Characteristics

Item	Parameters/Characteristics
Operating Temperature Range	−55°C to +125°C
Capacitance Change with Reference to +25°C and 0 VDC Applied (TCC)	±15%
[1]Aging Rate (Maximum % Capacitance Loss/Decade Hour)	3.0%
[2]Dielectric Withstanding Voltage (DWV)	250% of rated voltage (5 ±1 seconds and charge/discharge not exceeding 50 mA)
[3]Dissipation Factor (DF) Maximum Limit at 25°C	See Dissipation Factor Limit table
[4]Insulation Resistance (IR) Minimum Limit at 25°C	See Insulation Resistance Limit table (Rated voltage applied for 120 ±5 seconds at 25°C)

[1] Regarding Aging Rate: Capacitance measurements (including tolerance) are indexed to a referee time of 48 or 1,000 hours. Please refer to a part number specific datasheet for referee time details

[2] DWV is the voltage a capacitor can withstand (survive) for a short period of time. It exceeds the nominal and continuous working voltage of the capacitor.

[3] Capacitance and dissipation factor (DF) measured under the following conditions:
1 kHz ± 50 Hz and 1.0 ± 0.2 V_{rms} if capacitance ≤ 10 µF
120 Hz ± 10 Hz and 0.5 ± 0.1 V_{rms} if capacitance > 10 µF

[4] To obtain IR limit, divide MΩ – µF value by the capacitance and compare to GΩ limit. Select the lower of the two limits.

Note: When measuring capacitance it is important to ensure the set voltage level is held constant. The HP4284 and Agilent E4980 have a feature known as Automatic Level Control (ALC). The ALC feature should be switched to "ON."

Post Environmental Limits

Post Environmental Limits					
EIA Case Size	Rated DC Voltage	Capacitance	Dissipation Factor (Maximum %)	Capacitance Shift	Insulation Resistance
All	< 16	All	7.5	±20%	10% of Initial limit
	16/25		5.0		
	> 25		3.0		

Dissipation Factor Limit Table

EIA Case Size	Rated DC Voltage	Capacitance	Dissipation Factor (Maximum %)
All	16/25	All	3.5
	> 25		2.5

Insulation Resistance (IR) Limits Table

EIA Case Size	1,000 megohm microfarads or 100 GΩ	500 megohm microfarads or 10 GΩ
0402	< .012 µF	≥ .012 µF
0603	< .047 µF	≥ .047 µF
0805	< 0.15 µF	≥ 0.15 µF
1206	< 0.47 µF	≥ 0.47 µF

Table 1B – Product Availability and Chip Thickness Waterfall – Standard Termination

Capacitance	Cap Code	Case Size/ Series	C0402C			C0603C					
		Rated Voltage (VDC)	16	25	50	16	25	50	63	100	200
		Voltage Code	4	3	5	4	3	5	M	1	2
		Cap Tolerance	Product Availability and Chip Thickness Codes – See Packaging Specs for Chip Thickness Dimensions								
1.0 nF	102	J = ±5% K = ±10% M = ±20%	BB	BB	BB	CF	CF	CF	CF	CF	CF
1.5 nF	152		BB	BB	BB	CF	CF	CF	CF	CF	CF
2.2 nF	222		BB	BB	BB	CF	CF	CF	CF	CF	CF
3.3 nF	332		BB	BB	BB	CF	CF	CF	CF	CF	CF
4.7 nF	472		BB	BB	BB	CF	CF	CF	CF	CF	CF
6.8 nF	682		BB	BB	BB	CF	CF	CF	CF	CF	CF
10 nF	103		BB	BB	BB	CF	CF	CF	CF	CF	CF
15 nF	153		BB	BB	BB	CF	CF	CF	CF	CF	
22 nF	223		BB	BB	BB	CF	CF	CF	CF	CF	
33 nF	333		BB	BB		CF	CF	CF	CF	CF	
47 nF	473		BB	BB		CF	CF	CF	CF	CF	
68 nF	683		BB			CF	CF	CF			
100 nF	104		BB			CF	CF	CF			
150 nF	154					CF	CF	CF			
220 nF	224					CF	CF				

Capacitance	Cap Code	Case Size/ Series	C0805C							C1206C						
		Rated Voltage (VDC)	16	25	50	63	100	200	250	16	25	50	63	100	200	250
		Voltage Code	4	3	5	M	1	2	A	4	3	5	M	1	2	A
		Cap Tolerance	Product Availability and Chip Thickness Codes – See Packaging Specs for Chip Thickness Dimensions													
1.0 nF	102	J = ±5% K = ±10% M = ±20%	DN	DN	DN	DN	DN	DN	DN	EB	EB	EB	EB	EB	EB	EB
1.5 nF	152		DN	DN	DN	DN	DN	DN	DN	EB	EB	EB	EB	EB	EB	EB
2.2 nF	222		DN	DN	DN	DN	DN	DN	DN	EB	EB	EB	EB	EB	EB	EB
3.3 nF	332		DN	DN	DN	DN	DN	DN	DN	EB	EB	EB	EB	EB	EB	EB
4.7 nF	472		DN	DN	DN	DN	DN	DN	DN	EB	EB	EB	EB	EB	EB	EB
6.8 nF	682		DN	DN	DN	DN	DN	DN	DN	EB	EB	EB	EB	EB	EB	EB
10 nF	103		DN	DN	DN	DN	DN	DN	DN	EB	EB	EB	EB	EB	EB	EB
15 nF	153		DN	DN	DN	DN	DN	DN	DN	EB	EB	EB	EB	EB	EB	EB
22 nF	223		DN	DN	DN	DN	DN	DN	DN	EB	EB	EB	EB	EB	EB	EB
33 nF	333		DE	DE	DE	DE	DE	DE		EB	EB	EB	EB	EB	EB	EB
47 nF	473		DG	DG	DG	DG	DG	DG		ED	ED	ED	ED	ED	ED	ED
68 nF	683		DE	DE	DE	DE	DE			ED	ED	ED	ED	ED	ED	ED
100 nF	104		DE	DE	DE	DE	DE			EM	EM	EM	EM	EM	EM	EM
150 nF	154		DG	DG	DG	DG	DG			EG	EG	EG	EG	EG	EG	
220 nF	224		DG	DG	DG	DG	DG			EC	EC	EC	EC	EC		
330 nF	334		DP	DP	DP					EM	EM	EM	EM	EM		
470 nF	474		DE	DE	DE					EH	EH	EH	EH	EH		
680 nF	684		DG	DG	DG					ED	ED	ED				
1.0 µF	105		DG	DG						ED	ED	ED				
1.5 µF	155		DG							EH	EH	EH				
2.2 µF	225		DG							EH	EH	EH				

Table 1C – Product Availability and Chip Thickness Waterfall – Flexible Termination

Capacitance	Cap Code	Case Size/ Series	C0603C					
		Rated Voltage (VDC)	16	25	50	63	100	200
		Voltage Code	4	3	5	M	1	2
		Cap Tolerance	Product Availability and Chip Thickness Codes – See Packaging Specs for Chip Thickness Dimensions					
1.0 nF	102	J = ±5% K = ±10% M = ±20%	CJ	CJ	CJ	CJ	CJ	CJ
1.5 nF	152		CJ	CJ	CJ	CJ	CJ	CJ
2.2 nF	222		CJ	CJ	CJ	CJ	CJ	CJ
3.3 nF	332		CJ	CJ	CJ	CJ	CJ	CJ
4.7 nF	472		CJ	CJ	CJ	CJ	CJ	CJ
6.8 nF	682		CJ	CJ	CJ	CJ	CJ	CJ
10 nF	103		CJ	CJ	CJ	CJ	CJ	CJ
15 nF	153		CJ	CJ	CJ	CJ	CJ	
22 nF	223		CJ	CJ	CJ	CJ	CJ	
33 nF	333		CJ	CJ	CJ	CJ	CJ	
47 nF	473		CJ	CJ	CJ	CJ	CJ	
68 nF	683		CJ	CJ	CJ			
100 nF	104		CJ	CJ	CJ			
150 nF	154		CJ	CJ	CJ			
220 nF	224		CJ	CJ				

Capacitance	Cap Code	Case Size/ Series	C0805C							C1206C						
		Rated Voltage (VDC)	16	25	50	63	100	200	250	16	25	50	63	100	200	250
		Voltage Code	4	3	5	M	1	2	A	4	3	5	M	1	2	A
		Cap Tolerance	Product Availability and Chip Thickness Codes – See Packaging Specs for Chip Thickness Dimensions													
1.0 nF	102	J = ±5% K = ±10% M = ±20%	DR	DR	DR	DR	DR	DR	DC	EQ	EQ	EQ	EQ	EQ	EQ	EQ
1.5 nF	152		DR	DR	DR	DR	DR	DR	DR	EQ	EQ	EQ	EQ	EQ	EQ	EQ
2.2 nF	222		DR	DR	DR	DR	DR	DR	DR	EQ	EQ	EQ	EQ	EQ	EQ	EQ
3.3 nF	332		DR	DR	DR	DR	DR	DR	DR	EQ	EQ	EQ	EQ	EQ	EQ	EQ
4.7 nF	472		DR	DR	DR	DR	DR	DR	DR	EQ	EQ	EQ	EQ	EQ	EQ	EQ
6.8 nF	682		DR	DR	DR	DR	DR	DR	DR	EQ	EQ	EQ	EQ	EQ	EQ	EQ
10 nF	103		DR	DR	DR	DR	DR	DR	DR	EQ	EQ	EQ	EQ	EQ	EQ	EQ
15 nF	153		DR	DR	DR	DR	DR	DR	DR	EQ	EQ	EQ	EQ	EQ	EQ	EQ
22 nF	223		DR	DR	DR	DR	DR	DR	DR	EQ	EQ	EQ	EQ	EQ	EQ	EQ
33 nF	333		DS	DS	DS	DS	DS	DS		EQ	EQ	EQ	EQ	EQ	EQ	EQ
47 nF	473		DH	DH	DH	DH	DH	DH		ES	ES	ES	ES	ES	ES	ES
68 nF	683		DS	DS	DS	DS	DS			ES	ES	ES	ES	ES	ES	ES
100 nF	104		DE	DE	DE	DE	DE			EM	EM	EM	EM	EM	EM	EM
150 nF	154		DG	DG	DG	DG	DG			EU	EU	EU	EU	EU	EU	
220 nF	224		DG	DG	DG	DG	DG			ER	ER	ER	ER	ER		
330 nF	334		DD	DD	DD					EM	EM	EM	EM	EM		
470 nF	474		DS	DS	DS					EU	EU	EU	EU	EU		
680 nF	684		DG	DG	DG					ES	ES	ES				
1.0 µF	105		DG	DG						ES	ES	ES				
1.5 µF	155		DG							EU	EU	EU				
2.2 µF	225		DG							EU	EU	EU				

Table 2 – Chip Thickness/Tape & Reel Packaging Quantities

Thickness Code	Case Size[1]	Thickness ± Range (mm)	Paper Quantity[1]		Plastic Quantity	
			7" Reel	13" Reel	7" Reel	13" Reel
BB	0402	0.50 ±0.05	10,000	50,000	0	0
CF	0603	0.80 ±0.07*	4,000	15,000	0	0
CJ	0603	0.80 ± 0.15*	4,000	15,000	0	0
DC	0805	0.78 ± 0.10	0	0	4,000	10,000
DD	0805	0.90 ± 0.10	0	0	4,000	10,000
DE	0805	1.00 ±0.10	0	0	2,500	10,000
DG	0805	1.25 ±0.15	0	0	2,500	10,000
DH	0805	1.25 ± 0.20	0	0	2,500	10,000
DN	0805	0.78 ±0.10*	4,000	15,000	0	0
DP	0805	0.90 ±0.10*	4,000	15,000	0	0
DR	0805	0.78 ± 0.20	0	0	4,000	10,000
DS	0805	1.00 ± 0.20	0	0	2,500	10,000
EB	1206	0.78 ±0.10	0	0	4,000	10,000
EC	1206	0.90 ±0.10	0	0	4,000	10,000
ED	1206	1.00 ±0.10	0	0	2,500	10,000
EG	1206	1.60 ±0.15	0	0	2,000	8,000
EH	1206	1.60 ±0.20	0	0	2,000	8,000
EM	1206	1.25 ±0.15	0	0	2,500	10,000
EQ	1206	0.78 ± 0.20	0	0	4,000	10,000
ER	1206	0.90 ± 0.20	0	0	4,000	10,000
ES	1206	1.00 ± 0.20	0	0	2,500	10,000
EU	1206	1.60 ± 0.25	0	0	2,000	8,000

Table 3 – Bulk Packaging Quantities

Packaging Type		Loose Packaging	
		Bulk Bag (default)	
Packaging C-Spec[1]		N/A[2]	
Case Size		Packaging Quantities (pieces/unit packaging)	
EIA (in)	Metric (mm)	Minimum	Maximum
0402	1005	1	50,000
0603	1608		
0805	2012		
1206	3216		
1210	3225		
1808	4520		20,000
1812	4532		
1825	4564		
2220	5650		
2225	5664		

[1] *The "Packaging C-Spec" is a 4 to 8 digit code which identifies the packaging type and/or product grade. When ordering, the proper code must be included in the 15th through 22nd character positions of the ordering code. See "Ordering Information" section of this document for further details. Commercial grade product ordered without a packaging C-Spec will default to our standard "Bulk Bag" packaging. Contact KEMET if you require a bulk bag packaging option for automotive grade products.*

[2] *A packaging C-Spec (see note 1 above) is not required for "Bulk Bag" packaging (excluding Anti-Static Bulk Bag and automotive grade products). The 15th through 22nd character positions of the ordering code should be left blank. All products ordered without a packaging C-Spec will default to our standard "Bulk Bag" packaging.*

Table 4 – Land Pattern Design Recommendations per IPC–7351

EIA Size Code	Metric Size Code	Density Level A: Maximum (Most) Land Protrusion (mm)					Density Level B: Median (Nominal) Land Protrusion (mm)					Density Level C: Minimum (Least) Land Protrusion (mm)				
		C	Y	X	V1	V2	C	Y	X	V1	V2	C	Y	X	V1	V2
Without Flexible Termination																
0402	1005	0.50	0.72	0.72	2.20	1.20	0.45	0.62	0.62	1.90	1.00	0.40	0.52	0.52	1.60	0.80
0603	1608	0.90	1.15	1.10	4.00	2.10	0.80	0.95	1.00	3.10	1.50	0.60	0.75	0.90	2.40	1.20
0805	2012	1.00	1.35	1.55	4.40	2.60	0.90	1.15	1.45	3.50	2.00	0.75	0.95	1.35	2.80	1.70
1206	3216	1.60	1.35	1.90	5.60	2.90	1.50	1.15	1.80	4.70	2.30	1.40	0.95	1.70	4.00	2.00
With Flexible Termination																
0603	1608	0.85	1.25	1.10	4.00	2.10	0.75	1.05	1.00	3.10	1.50	0.65	0.85	0.90	2.40	1.20
0805	2012	0.99	1.44	1.66	4.47	2.71	0.89	1.24	1.56	3.57	2.11	0.79	1.04	1.46	2.42	1.81
1206	3216	1.59	1.62	2.06	5.85	3.06	1.49	1.42	1.96	4.95	2.46	1.39	1.22	1.86	4.25	2.16

Density Level A: *For low-density product applications. Recommended for wave solder applications and provides a wider process window for reflow solder processes. KEMET only recommends wave soldering of EIA 0603, 0805 and 1206 case sizes.*
Density Level B: *For products with a moderate level of component density. Provides a robust solder attachment condition for reflow solder processes.*
Density Level C: *For high component density product applications. Before adapting the minimum land pattern variations the user should perform qualification testing based on the conditions outlined in IPC Standard 7351 (IPC–7351).*

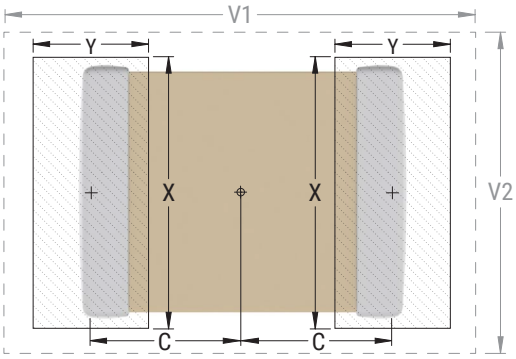

Grid Placement Courtyard

Soldering Process

Recommended Soldering Technique

- Solder wave or solder reflow for EIA case sizes 0603, 0805 and 1206
- All other EIA case sizes are limited to solder reflow only

Recommended Reflow Soldering Profile

The KEMET families of surface mount multilayer ceramic capacitors (SMD MLCCs) are compatible with wave (single or dual), convection, IR or vapor phase reflow techniques. Preheating of these components is recommended to avoid extreme thermal stress. KEMET's recommended profile conditions for convection and IR reflow reflect the profile conditions of the IPC/J-STD-020 standard for moisture sensitivity testing. These devices can safely withstand a maximum of three reflow passes at these conditions.

Profile Feature	Termination Finish
	100% Matte (Sn)
Preheat/Soak Temperature minimum (T_{Smin}) Temperature maximum (T_{Smax}) Time (t_S) from T_{Smin} to T_{Smax}	 150°C 200°C 60 – 120 seconds
Ramp-up rate (T_L to T_P)	3°C/second maximum
Liquidous temperature (T_L)	217°C
Time above liquidous (t_L)	60 – 150 seconds
Peak temperature (T_P)	260°C
Time within 5°C of maximum peak temperature (t_P)	30 seconds maximum
Ramp-down rate (T_P to T_L)	6°C/second maximum
Time 25°C to peak temperature	8 minutes maximum

Note: All temperatures refer to the center of the package, measured on the capacitor body surface that is facing up during assembly reflow.

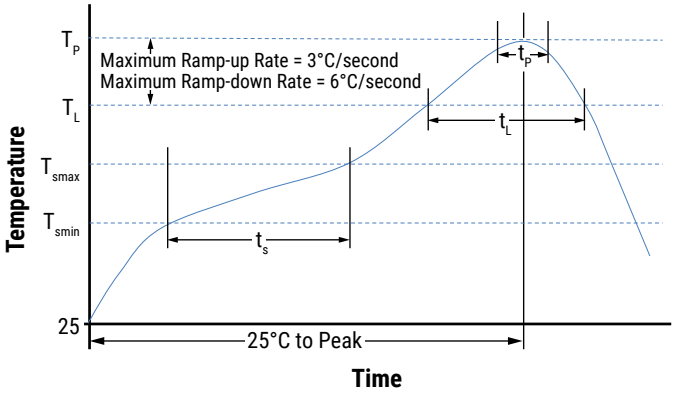

Table 5 – Performance & Reliability: Test Methods and Conditions

<table>
<tr><th>Stress</th><th>Reference</th><th>Test or Inspection Method</th></tr>
<tr><td>Terminal Strength</td><td>JIS–C–6429</td><td>Appendix 1, Note: Force of 1.8 kg for 60 seconds.</td></tr>
<tr><td>Board Flex</td><td>JIS–C–6429</td><td>Appendix 2, Note: Standard termination system – 2.0 mm (minimum) for all except 3 mm for C0G. Flexible termination system – 3.0 mm (minimum).</td></tr>
<tr><td rowspan="4">Solderability</td><td rowspan="4">J–STD–002</td><td>Magnification 50 X. Conditions:</td></tr>
<tr><td>a) Method B, 4 hours at 155°C, dry heat at 235°C</td></tr>
<tr><td>b) Method B at 215°C, category 3</td></tr>
<tr><td>c) Method D, at 260°C, category 3</td></tr>
<tr><td>Temperature Cycling</td><td>JESD22 Method JA–104</td><td>1,000 Cycles (–55°C to +125°C). Measurement at 24 hours ±4 hours after test conclusion.</td></tr>
<tr><td rowspan="2">Biased Humidity</td><td rowspan="2">MIL–STD–202
Method 103</td><td>Load humidity: 1,000 hours 85°C/85% RH and rated voltage. Add 100 K ohm resistor.
Measurement at 24 hours ±4 hours after test conclusion.</td></tr>
<tr><td>Low volt humidity: 1,000 hours 85°C/85% RH and 1.5 V. Add 100 K ohm resistor.
Measurement at 24 hours ±4 hours after test conclusion.</td></tr>
<tr><td>Moisture Resistance</td><td>MIL–STD–202
Method 106</td><td>t = 24 hours/cycle. Steps 7a and 7b not required.
Measurement at 24 hours ±4 hours after test conclusion.</td></tr>
<tr><td>Thermal Shock</td><td>MIL–STD–202
Method 107</td><td>–55°C/+125°C. Note: Number of cycles required – 300. Maximum transfer time – 20 seconds.
Dwell time – 15 minutes. Air – Air.</td></tr>
<tr><td>High Temperature Life</td><td>MIL–STD–202
Method 108/EIA–198</td><td>1,000 hours at 125°C with 2 X rated voltage applied excluding the following:
<table>
<tr><th>Case Size</th><th>Capacitance</th><th>Applied Voltage</th></tr>
<tr><td>0603 and 0805</td><td>≥ 1.0 µF</td><td rowspan="2">1.5 X</td></tr>
<tr><td>1206 and 1210</td><td>≥ 10 µF</td></tr>
</table></td></tr>
<tr><td>Storage Life</td><td>MIL–STD–202
Method 108</td><td>150°C, 0 VDC for 1,000 hours.</td></tr>
<tr><td>Vibration</td><td>MIL–STD–202
Method 204</td><td>5 g's for 20 minutes, 12 cycles each of 3 orientations. Note: use 8" X 5" PCB 0.031" thick 7 secure points on one long side and 2 secure points at corners of opposite sides. Parts mounted within 2" from any secure point. Test from 10 – 2,000 Hz</td></tr>
<tr><td>Mechanical Shock</td><td>MIL–STD–202
Method 213</td><td>Figure 1 of Method 213, Condition F.</td></tr>
<tr><td>Resistance to Solvents</td><td>MIL–STD–202
Method 215</td><td>Add aqueous wash chemical, OKEM Clean or equivalent.</td></tr>
</table>

Storage and Handling

Ceramic chip capacitors should be stored in normal working environments. While the chips themselves are quite robust in other environments, solderability will be degraded by exposure to high temperatures, high humidity, corrosive atmospheres, and long term storage. In addition, packaging materials will be degraded by high temperature – reels may soften or warp and tape peel force may increase. KEMET recommends that maximum storage temperature not exceed 40ºC and maximum storage humidity not exceed 70% relative humidity. Temperature fluctuations should be minimized to avoid condensation on the parts and atmospheres should be free of chlorine and sulfur bearing compounds. For optimized solderability chip stock should be used promptly, preferably within 1.5 years of receipt.

Construction – Standard Termination

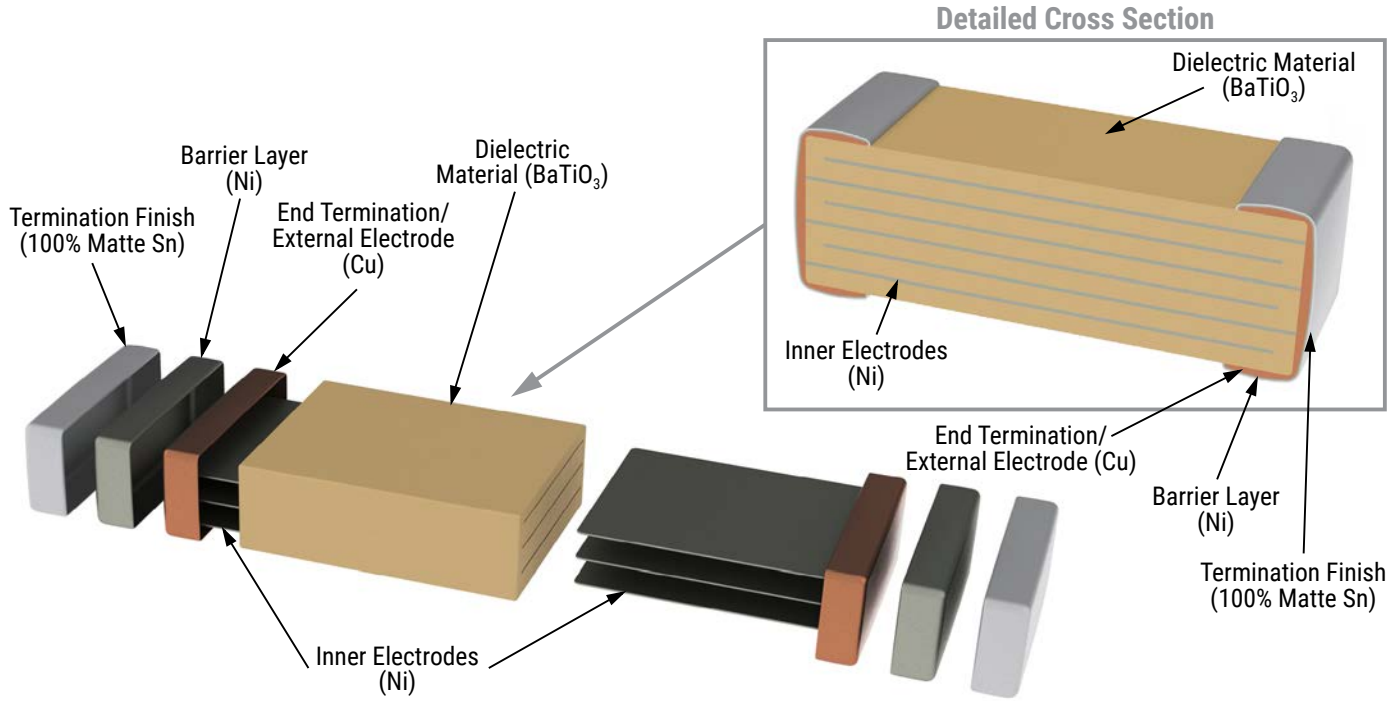

Construction – Flexible Termination

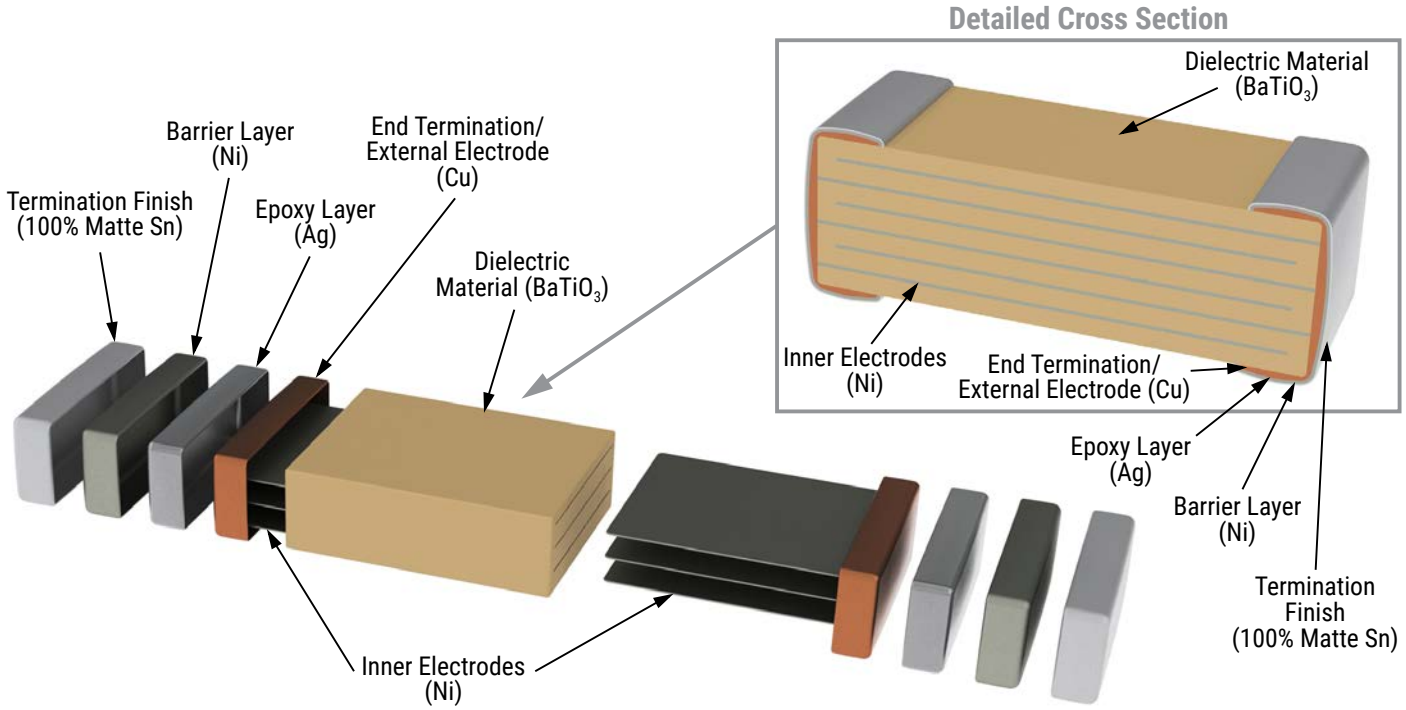

Capacitor Marking (Optional)

These surface mount multilayer ceramic capacitors are normally supplied unmarked. If required, they can be marked as an extra cost option. Marking is available on most KEMET devices, but must be requested using the correct ordering code identifier(s). If this option is requested, two sides of the ceramic body will be laser marked with a "K" to identify KEMET, followed by two characters (per EIA–198 - see table below) to identify the capacitance value. EIA 0603 case size devices are limited to the "K" character only.

Laser marking option is not available on:

- C0G, ultra stable X8R and Y5V dielectric devices.
- EIA 0402 case size devices.
- EIA 0603 case size devices with flexible termination option.
- KPS commercial and automotive grade stacked devices.
- X7R dielectric products in capacitance values outlined below.

EIA Case Size	Metric Size Code	Capacitance
0603	1608	≤ 170 pF
0805	2012	≤ 150 pF
1206	3216	≤ 910 pF
1210	3225	≤ 2,000 pF
1808	4520	≤ 3,900 pF
1812	4532	≤ 6,700 pF
1825	4564	≤ 0.018 µF
2220	5650	≤ 0.027 µF
2225	5664	≤ 0.033 µF

Marking appears in legible contrast. Illustrated below is an example of an MLCC with laser marking of "KA8", which designates a KEMET device with rated capacitance of 100 µF. Orientation of marking is vendor optional.

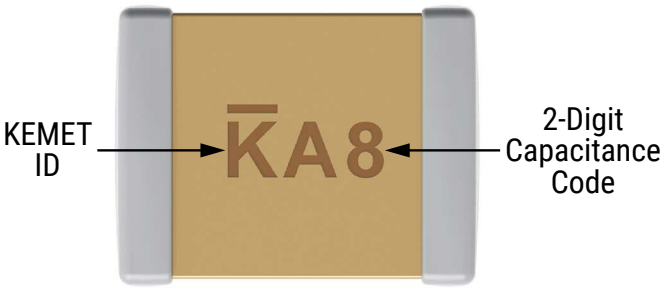

Capacitor Marking (Optional) cont.

Capacitance (pF) For Various Alpha/Numeral Identifiers										
Alpha Character	Numeral									
	9	0	1	2	3	4	5	6	7	8
	Capacitance (pF)									
A	0.10	1.0	10	100	1,000	10,000	100,000	1,000,000	10,000,000	100,000,000
B	0.11	1.1	11	110	1,100	11,000	110,000	1,100,000	11,000,000	110,000,000
C	0.12	1.2	12	120	1,200	12,000	120,000	1,200,000	12,000,000	120,000,000
D	0.13	1.3	13	130	1,300	13,000	130,000	1,300,000	13,000,000	130,000,000
E	0.15	1.5	15	150	1,500	15,000	150,000	1,500,000	15,000,000	150,000,000
F	0.16	1.6	16	160	1,600	16,000	160,000	1,600,000	16,000,000	160,000,000
G	0.18	1.8	18	180	1,800	18,000	180,000	1,800,000	18,000,000	180,000,000
H	0.20	2.0	20	200	2,000	20,000	200,000	2,000,000	20,000,000	200,000,000
J	0.22	2.2	22	220	2,200	22,000	220,000	2,200,000	22,000,000	220,000,000
K	0.24	2.4	24	240	2,400	24,000	240,000	2,400,000	24,000,000	240,000,000
L	0.27	2.7	27	270	2,700	27,000	270,000	2,700,000	27,000,000	270,000,000
M	0.30	3.0	30	300	3,000	30,000	300,000	3,000,000	30,000,000	300,000,000
N	0.33	3.3	33	330	3,300	33,000	330,000	3,300,000	33,000,000	330,000,000
P	0.36	3.6	36	360	3,600	36,000	360,000	3,600,000	36,000,000	360,000,000
Q	0.39	3.9	39	390	3,900	39,000	390,000	3,900,000	39,000,000	390,000,000
R	0.43	4.3	43	430	4,300	43,000	430,000	4,300,000	43,000,000	430,000,000
S	0.47	4.7	47	470	4,700	47,000	470,000	4,700,000	47,000,000	470,000,000
T	0.51	5.1	51	510	5,100	51,000	510,000	5,100,000	51,000,000	510,000,000
U	0.56	5.6	56	560	5,600	56,000	560,000	5,600,000	56,000,000	560,000,000
V	0.62	6.2	62	620	6,200	62,000	620,000	6,200,000	62,000,000	620,000,000
W	0.68	6.8	68	680	6,800	68,000	680,000	6,800,000	68,000,000	680,000,000
X	0.75	7.5	75	750	7,500	75,000	750,000	7,500,000	75,000,000	750,000,000
Y	0.82	8.2	82	820	8,200	82,000	820,000	8,200,000	82,000,000	820,000,000
Z	0.91	9.1	91	910	9,100	91,000	910,000	9,100,000	91,000,000	910,000,000
a	0.25	2.5	25	250	2,500	25,000	250,000	2,500,000	25,000,000	250,000,000
b	0.35	3.5	35	350	3,500	35,000	350,000	3,500,000	35,000,000	350,000,000
d	0.40	4.0	40	400	4,000	40,000	400,000	4,000,000	40,000,000	400,000,000
e	0.45	4.5	45	450	4,500	45,000	450,000	4,500,000	45,000,000	450,000,000
f	0.50	5.0	50	500	5,000	50,000	500,000	5,000,000	50,000,000	500,000,000
m	0.60	6.0	60	600	6,000	60,000	600,000	6,000,000	60,000,000	600,000,000
n	0.70	7.0	70	700	7,000	70,000	700,000	7,000,000	70,000,000	700,000,000
t	0.80	8.0	80	800	8,000	80,000	800,000	8,000,000	80,000,000	800,000,000
y	0.90	9.0	90	900	9,000	90,000	900,000	9,000,000	90,000,000	900,000,000

Tape & Reel Packaging Information

KEMET offers multilayer ceramic chip capacitors packaged in 8, 12 and 16 mm tape on 7" and 13" reels in accordance with EIA Standard 481. This packaging system is compatible with all tape-fed automatic pick and place systems. See Table 2 for details on reeling quantities for commercial chips.

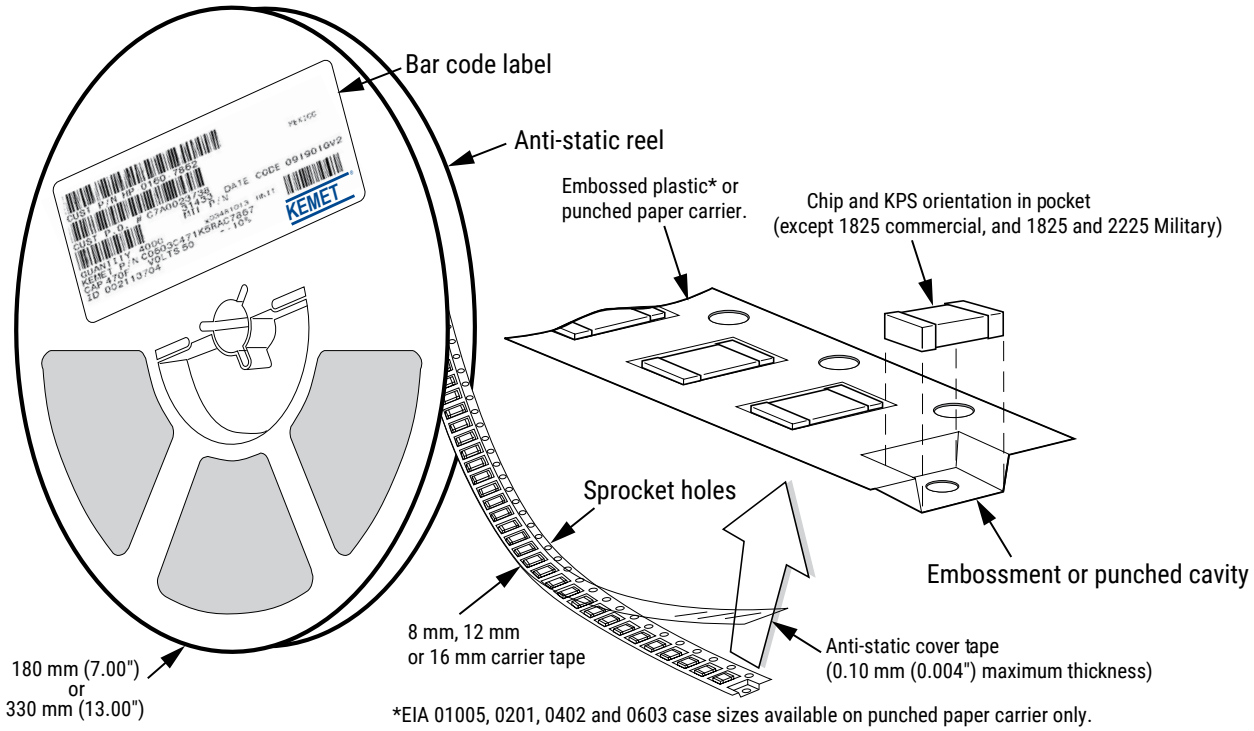

Table 6 – Carrier Tape Configuration, Embossed Plastic & Punched Paper (mm)

EIA Case Size	Tape Size (W)*	Embossed Plastic		Punched Paper	
		7" Reel	13" Reel	7" Reel	13" Reel
		Pitch (P_1)*		Pitch (P_1)*	
01005 – 0402	8			2	2
0603	8			2/4	2/4
0805	8	4	4	4	4
1206 – 1210	8	4	4	4	4
1805 – 1808	12	4	4		
≥ 1812	12	8	8		
KPS 1210	12	8	8		
KPS 1812 and 2220	16	12	12		
Array 0612	8	4	4		

**Refer to Figures 1 and 2 for W and P_1 carrier tape reference locations.*
**Refer to Tables 6 and 7 for tolerance specifications.*

New 2 mm Pitch Reel Options*

Packaging Ordering Code (C-Spec)	Packaging Type/Options
C-3190	Automotive grade 7" reel unmarked
C-3191	Automotive grade 13" reel unmarked
C-7081	Commercial grade 7" reel unmarked
C-7082	Commercial grade 13" reel unmarked

** 2 mm pitch reel only available for 0603 EIA case size.*
2 mm pitch reel for 0805 EIA case size under development.

Benefits of Changing from 4 mm to 2 mm Pitching Spacing

- Lower placement costs.
- Double the parts on each reel results in fewer reel changes and increased efficiency.
- Fewer reels result in lower packaging, shipping and storage costs, reducing waste.

Figure 1 – Embossed (Plastic) Carrier Tape Dimensions

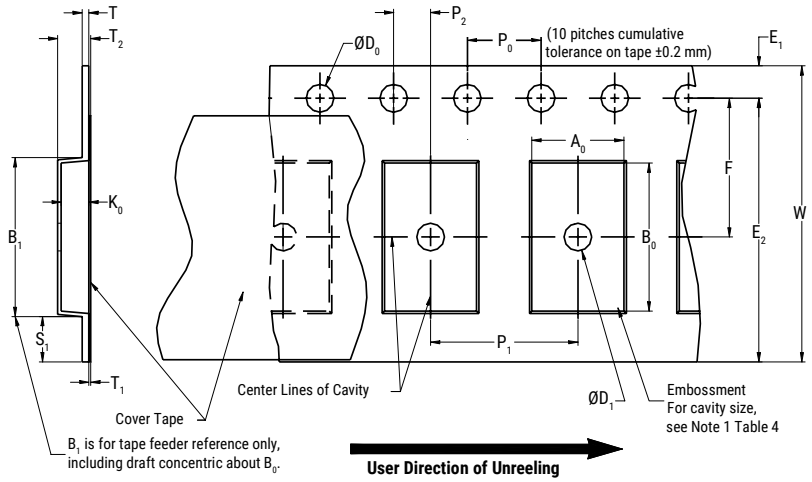

Table 7 – Embossed (Plastic) Carrier Tape Dimensions

Metric will govern

Constant Dimensions — Millimeters (Inches)									
Tape Size	D_0	D_1 Minimum Note 1	E_1	P_0	P_2	R Reference Note 2	S_1 Minimum Note 3	T Maximum	T_1 Maximum
8 mm	1.5 +0.10/−0.0 (0.059 +0.004/−0.0)	1.0 (0.039)	1.75 ±0.10 (0.069 ±0.004)	4.0 ±0.10 (0.157 ±0.004)	2.0 ±0.05 (0.079 ±0.002)	25.0 (0.984)	0.600 (0.024)	0.600 (0.024)	0.100 (0.004)
12 mm		1.5 (0.059)				30 (1.181)			
16 mm									

Variable Dimensions — Millimeters (Inches)								
Tape Size	Pitch	B_1 Maximum Note 4	E_2 Minimum	F	P_1	T_2 Maximum	W Maximum	A_0,B_0 & K_0
8 mm	Single (4 mm)	4.35 (0.171)	6.25 (0.246)	3.5 ±0.05 (0.138 ±0.002)	4.0 ±0.10 (0.157 ±0.004)	2.5 (0.098)	8.3 (0.327)	Note 5
12 mm	Single (4 mm) and Double (8 mm)	8.2 (0.323)	10.25 (0.404)	5.5 ±0.05 (0.217 ±0.002)	8.0 ±0.10 (0.315 ±0.004)	4.6 (0.181)	12.3 (0.484)	
16 mm	Triple (12 mm)	12.1 (0.476)	14.25 (0.561)	7.5 ±0.05 (0.138 ±0.002)	12.0 ±0.10 (0.157 ±0.004)	4.6 (0.181)	16.3 (0.642)	

1. The embossment hole location shall be measured from the sprocket hole controlling the location of the embossment. Dimensions of embossment location and hole location shall be applied independent of each other.
2. The tape with or without components shall pass around R without damage (see Figure 6.)
3. If S_1 < 1.0 mm, there may not be enough area for cover tape to be properly applied (see EIA Standard 481, paragraph 4.3, section b.)
4. B_1 dimension is a reference dimension for tape feeder clearance only.
5. The cavity defined by A_0, B_0 and K_0 shall surround the component with sufficient clearance that:
(a) the component does not protrude above the top surface of the carrier tape.
(b) the component can be removed from the cavity in a vertical direction without mechanical restriction, after the top cover tape has been removed.
(c) rotation of the component is limited to 20° maximum for 8 and 12 mm tapes, and 10° maximum for 16 mm tapes (see Figure 3.)
(d) lateral movement of the component is restricted to 0.5 mm maximum for 8 and 12 mm wide tape, and to 1.0 mm maximum for 16 mm tape (see Figure 4.)
(e) for KPS product, A_0 and B_0 are measured on a plane 0.3 mm above the bottom of the pocket.
(f) see addendum in EIA Standard 481 for standards relating to more precise taping requirements.

Figure 2 – Punched (Paper) Carrier Tape Dimensions

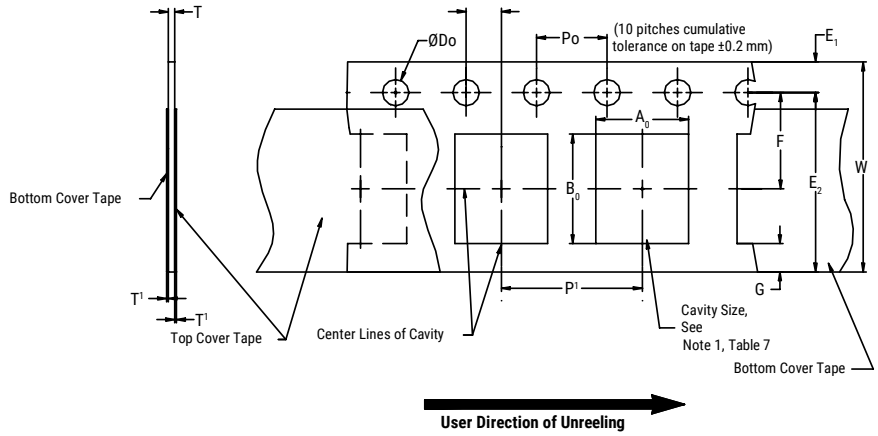

Table 8 – Punched (Paper) Carrier Tape Dimensions

Metric will govern

Constant Dimensions — Millimeters (Inches)							
Tape Size	D_0	E_1	P_0	P_2	T_1 Maximum	G Minimum	R Reference Note 2
8 mm	1.5 +0.10 -0.0 (0.059 +0.004 -0.0)	1.75 ±0.10 (0.069 ±0.004)	4.0 ±0.10 (0.157 ±0.004)	2.0 ±0.05 (0.079 ±0.002)	0.10 (0.004) maximum	0.75 (0.030)	25 (0.984)

Variable Dimensions — Millimeters (Inches)							
Tape Size	Pitch	E2 Minimum	F	P_1	T Maximum	W Maximum	A_0 B_0
8 mm	Half (2 mm)	6.25 (0.246)	3.5 ±0.05 (0.138 ±0.002)	2.0 ±0.05 (0.079 ±0.002)	1.1 (0.098)	8.3 (0.327)	Note 1
8 mm	Single (4 mm)			4.0 ±0.10 (0.157 ±0.004)		8.3 (0.327)	

1. The cavity defined by A_0, B_0 and T shall surround the component with sufficient clearance that:
a) the component does not protrude beyond either surface of the carrier tape.
b) the component can be removed from the cavity in a vertical direction without mechanical restriction, after the top cover tape has been removed.
c) rotation of the component is limited to 20° maximum (see Figure 3.)
d) lateral movement of the component is restricted to 0.5 mm maximum (see Figure 4.)
e) see addendum in EIA Standard 481 for standards relating to more precise taping requirements.
2. The tape with or without components shall pass around R without damage (see Figure 6.)

Packaging Information Performance Notes

1. Cover Tape Break Force: 1.0 kg minimum.
2. Cover Tape Peel Strength: The total peel strength of the cover tape from the carrier tape shall be:

Tape Width	Peel Strength
8 mm	0.1 to 1.0 newton (10 to 100 gf)
12 and 16 mm	0.1 to 1.3 newton (10 to 130 gf)

The direction of the pull shall be opposite the direction of the carrier tape travel. The pull angle of the carrier tape shall be 165° to 180° from the plane of the carrier tape. During peeling, the carrier and/or cover tape shall be pulled at a velocity of 300 ±10 mm/minute.
3. Labeling: Bar code labeling (standard or custom) shall be on the side of the reel opposite the sprocket holes. *Refer to EIA Standards 556 and 624*.

Figure 3 – Maximum Component Rotation

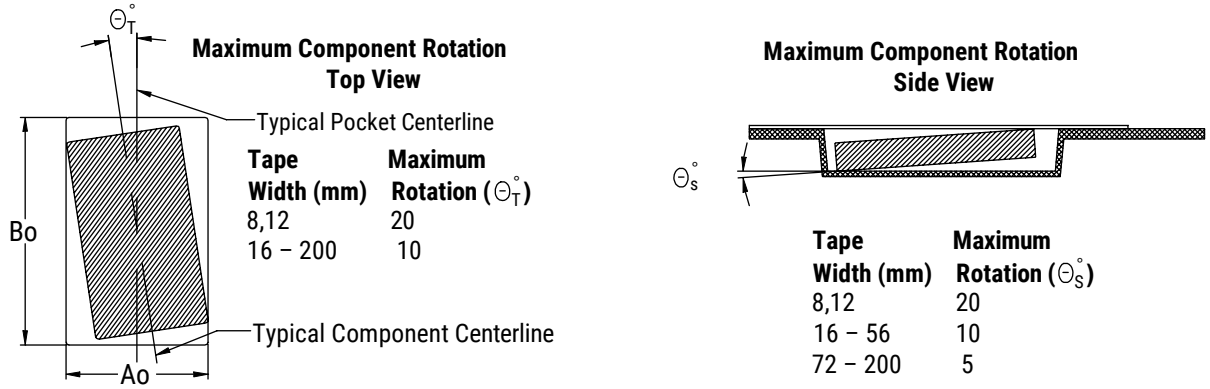

Figure 4 – Maximum Lateral Movement

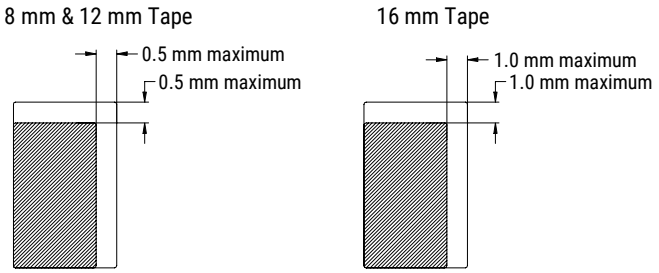

Figure 5 – Bending Radius

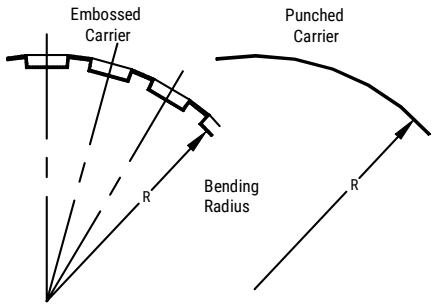

Figure 6 – Reel Dimensions

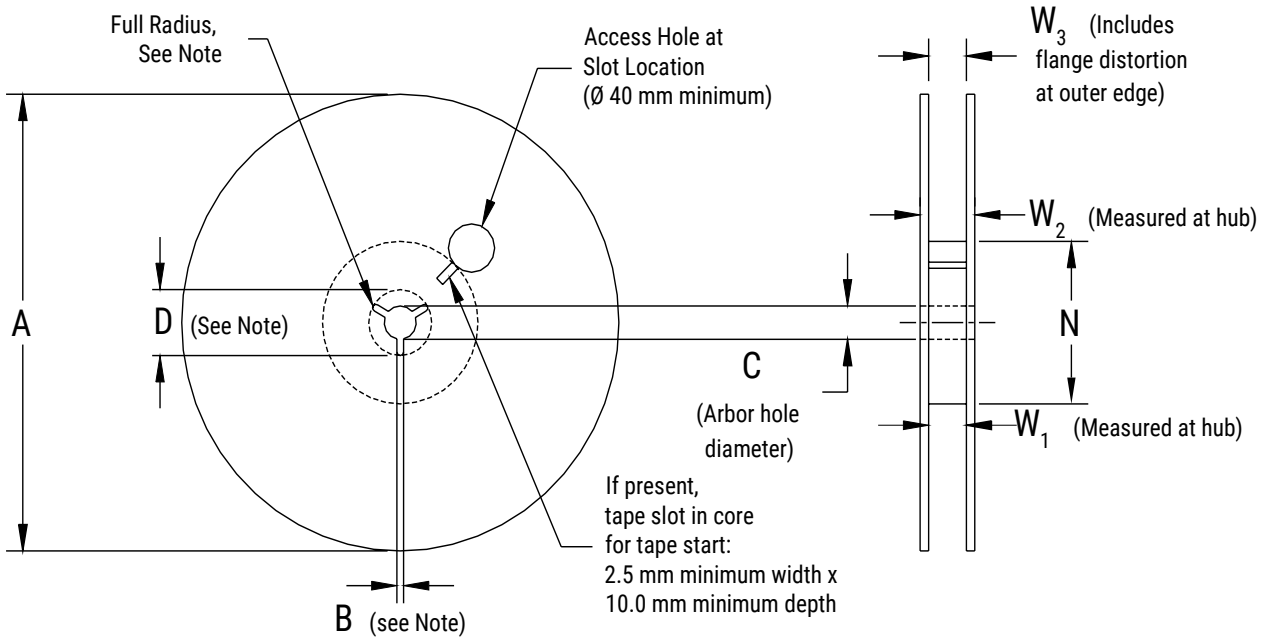

Note: Drive spokes optional; if used, dimensions B and D shall apply.

Table 9 – Reel Dimensions

Metric will govern

Constant Dimensions — Millimeters (Inches)				
Tape Size	A	B Minimum	C	D Minimum
8 mm	178 ±0.20 (7.008 ±0.008) or 330 ±0.20 (13.000 ±0.008)	1.5 (0.059)	13.0 +0.5/−0.2 (0.521 +0.02/−0.008)	20.2 (0.795)
12 mm				
16 mm				

Variable Dimensions — Millimeters (Inches)				
Tape Size	N Minimum	W_1	W_2 Maximum	W_3
8 mm	50 (1.969)	8.4 +1.5/−0.0 (0.331 +0.059/−0.0)	14.4 (0.567)	Shall accommodate tape width without interference
12 mm		12.4 +2.0/−0.0 (0.488 +0.078/−0.0)	18.4 (0.724)	
16 mm		16.4 +2.0/−0.0 (0.646 +0.078/−0.0)	22.4 (0.882)	

Figure 7 – Tape Leader & Trailer Dimensions

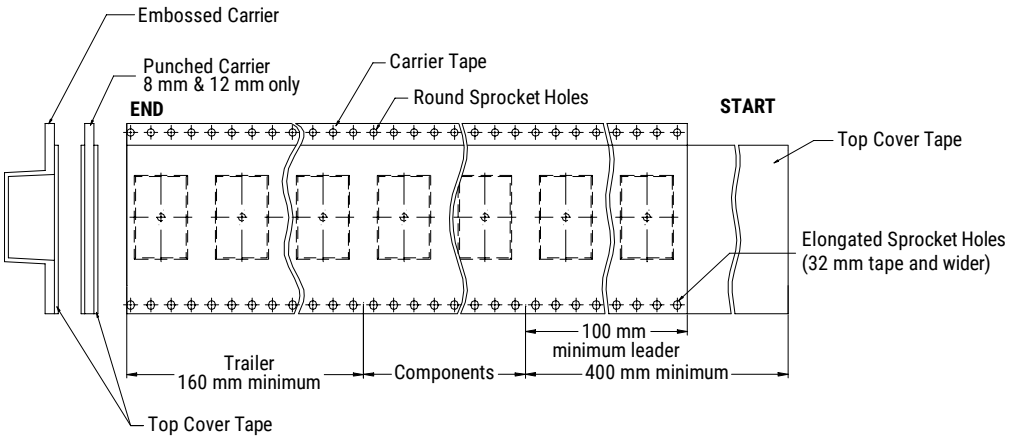

Figure 8 – Maximum Camber

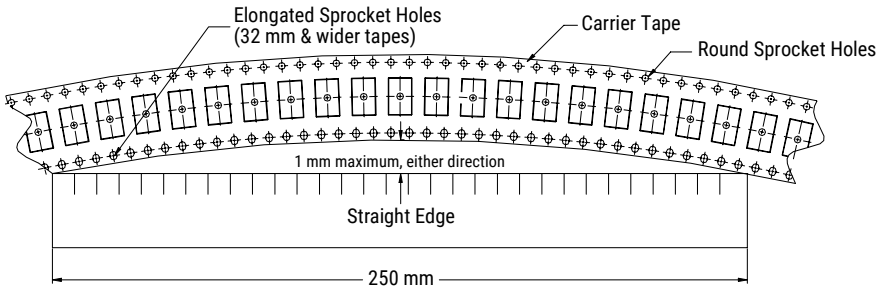

KEMET Electronics Corporation Sales Offices

For a complete list of our global sales offices, please visit www.kemet.com/sales.

Disclaimer

All product specifications, statements, information and data (collectively, the "Information") in this datasheet are subject to change. The customer is responsible for checking and verifying the extent to which the Information contained in this publication is applicable to an order at the time the order is placed. All Information given herein is believed to be accurate and reliable, but it is presented without guarantee, warranty, or responsibility of any kind, expressed or implied.

Statements of suitability for certain applications are based on KEMET Electronics Corporation's ("KEMET") knowledge of typical operating conditions for such applications, but are not intended to constitute – and KEMET specifically disclaims – any warranty concerning suitability for a specific customer application or use. The Information is intended for use only by customers who have the requisite experience and capability to determine the correct products for their application. Any technical advice inferred from this Information or otherwise provided by KEMET with reference to the use of KEMET's products is given gratis, and KEMET assumes no obligation or liability for the advice given or results obtained.

Although KEMET designs and manufactures its products to the most stringent quality and safety standards, given the current state of the art, isolated component failures may still occur. Accordingly, customer applications which require a high degree of reliability or safety should employ suitable designs or other safeguards (such as installation of protective circuitry or redundancies) in order to ensure that the failure of an electrical component does not result in a risk of personal injury or property damage.

Although all product–related warnings, cautions and notes must be observed, the customer should not assume that all safety measures are indicted or that other measures may not be required.

KEMET is a registered trademark of KEMET Electronics Corporation.