User's Guide

SQ10 - Passive 1:1 handsfree probe

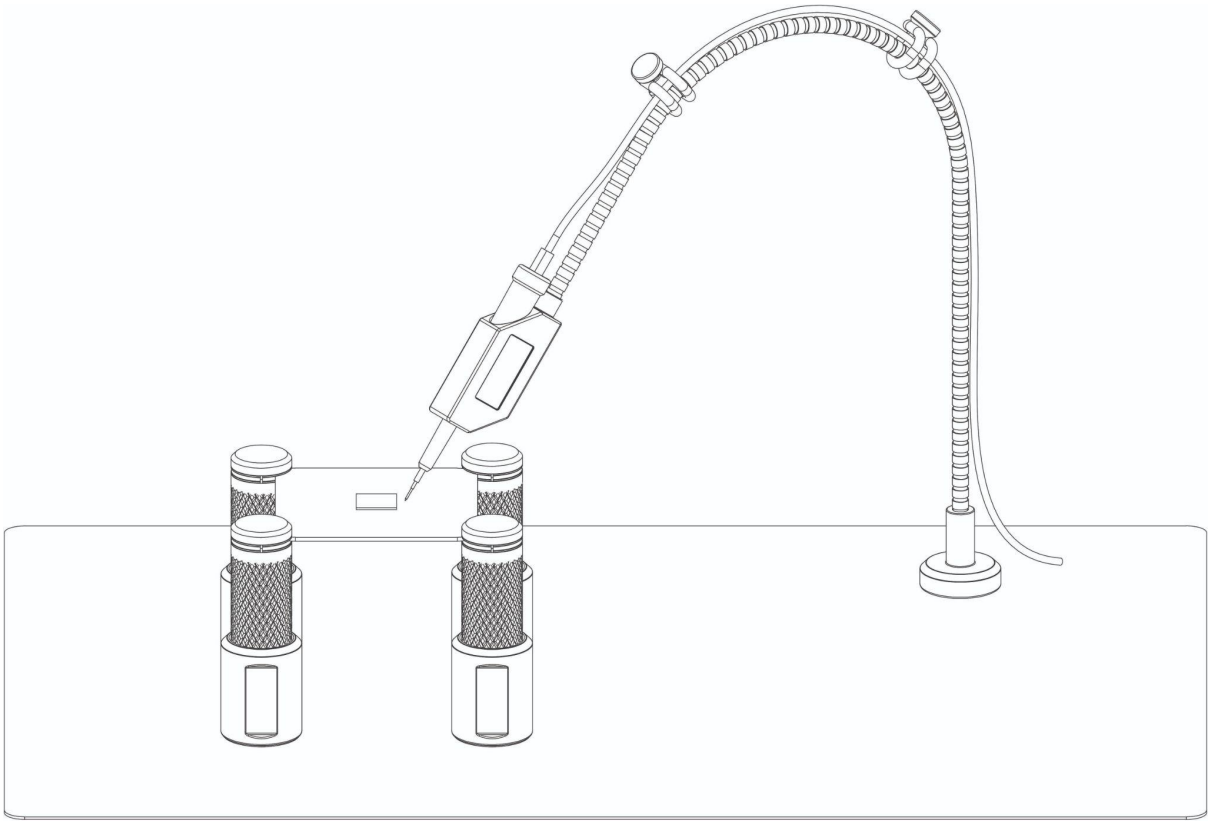

Made in Sweden by Sensepeek AB, Verkstadsgatan 2, Vellinge, Sweden

Rev 1.1 - Specifications are subject to change without notice.

sales@prom-elec.com / ООО ПРОМЭЛЕКТРОНИКА

Introduction

This passive 1:1 probe is suitable for signal measurements and logic analyzers for high speed serial communication interfaces like SPI, CAN, USB, JTAG, I2C, UART etc. The probe can also be used for resistance and voltage measurements, power and grounding of devices with continuous currents of maximum two ampere.

Warranty

Sensepeek products are warranted for 12 months from the date of purchase. The warranty covers defects in material and workmanship. This warranty does not apply to components (parts and accessories) subject to natural and normal wear and tear. This warranty does not in any way limit the rights you have under mandatory law.

Disposal

Sensepeek offers our customers the opportunity to return products at the end of their functional lives to Sensepeek for recycling. Qualifying products are marked with the WEEE symbol shown above. Or ensure WEEE compliant collection and treatment yourself. Do not dispose of this product as unsorted municipal waste

Delivery cost of any authorized product returned to Sensepeek will be at the expense of the sender.

Safety

To prevent possible death, personal injury, electrical shock, fire or damage to the product, carefully read this safety information before use of the product. Follow all generally accepted safety practices and procedures for working with and near electricity. The product has been designed in accordance with the IEC 61010-031 standard and left the factory tested and in a safe condition.

Safety descriptions found throughout this user guide:

A WARNING identifies conditions or practices that could result in death or injury. To prevent injury or death only qualified personnel should use this product, only as instructed and with only accessories supplied or recommended. Protection provided by the product may be impaired if used in a manner not specified in this guide.

A CAUTION identifies conditions or practices that could result in damage to connected product or equipment.

Maximum input ranges

The full-scale measurement ranges are the maximum voltages that can be accurately measured by the probe for safe operation. The overvoltage ranges are the maximum voltages that will not damage the probe.

WARNING To prevent electric shock, do not connect the probe to voltages exceeding the levels specified in this user guide and do take all necessary safety precautions when working on equipment where hazardous live voltages may be present.

WARNING Do not connect to a mains voltage or a derived voltage that can carry the overvoltage transients that may be present. Note that the probe's maximum input voltage rating decreases as the frequency of the applied signal increases. This probe does not carry a measurement category rating.

Grounding

WARNING Do not ever connect the ground input to, or allow it to touch, any electrical potential other than ground. To prevent death or personal injury, always measure that there is no significant DC or AC voltage between the probe ground and the point to which you intend to connect it.

CAUTION Applying a voltage to the ground input is likely to cause permanent damage to the probe or other connected equipment.

Environment

WARNING To prevent death or injury, do not use near explosive vapor or gas.

CAUTION To prevent damage to the probe, always operate and store your probe according to the levels specified in this guide.

Care of the product

The probe contains no user-serviceable parts.

WARNING To prevent death or injury, do not try to open any part of the assembly, do not use the product if it appears to be damaged in any way, and stop use immediately if it behaves abnormally.

CAUTION Always handle with care to avoid injury from the sharp tip. Ensure that the probe is completely dry before use. Do not allow liquids to enter the probe. Take care to avoid mechanical stress or tight bends on the arm and cable connecting the probe head to the oscilloscope. Mishandling will degrade performance and measurement accuracy and is not covered by the warranty. Avoid all kind of mechanical shock to the probe assembly.

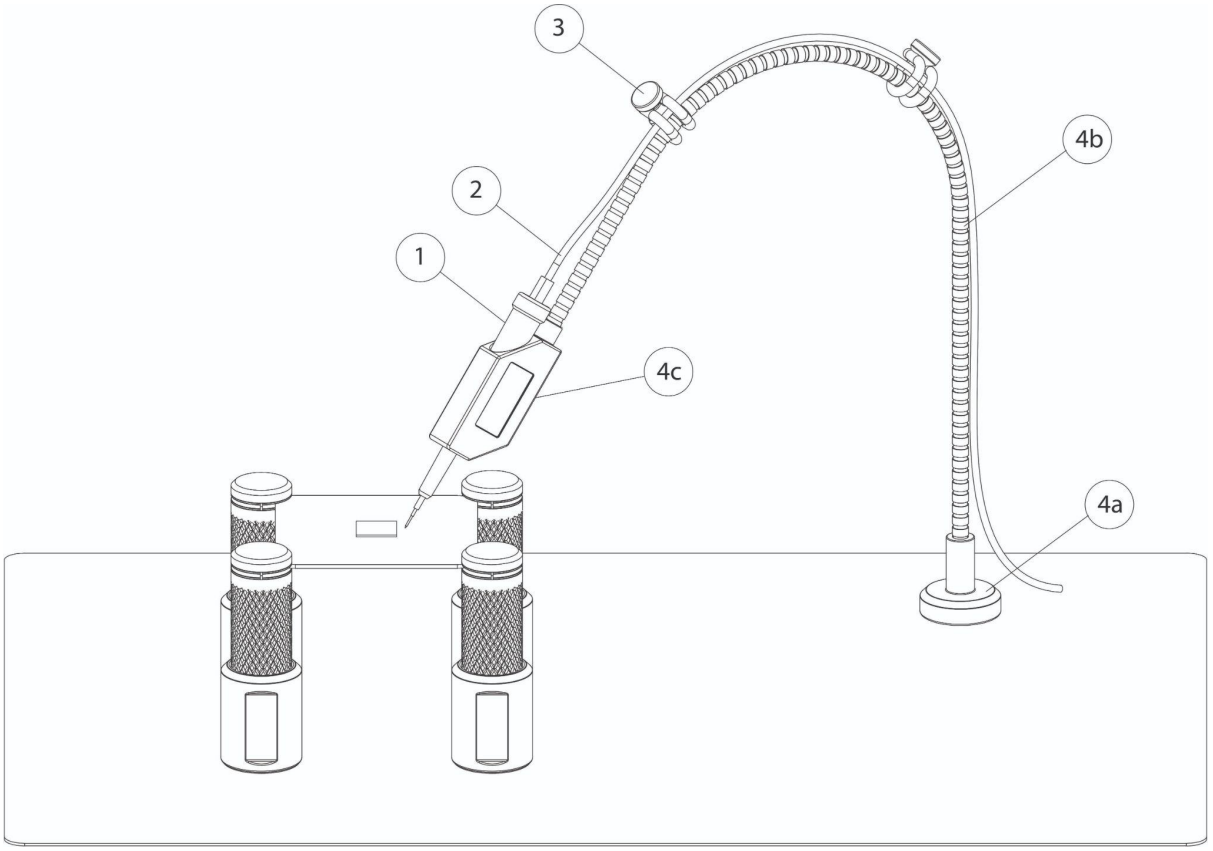

Overview

1. Probe
2. Test wire (Detachable)
3. Color coded cable holder
4. Probe arm
    a. Probe base (with magnet)
    b. Flexible arm
    c. Probe arm grip

Getting started

1. Insert the probe inside the probe arm cavity
2. Attach the test wire to the pin head connector
3. Snap on the color coded cable holders on the flexible arm and the test wire to hold and identify your channel
4. Connect your instrument to the test wire

Operating instructions

Mounting the probe

1. Insert the probe inside the probe arm cavity
2. Push the probe inside the cavity until it stops
3. The friction will hold the probe in place

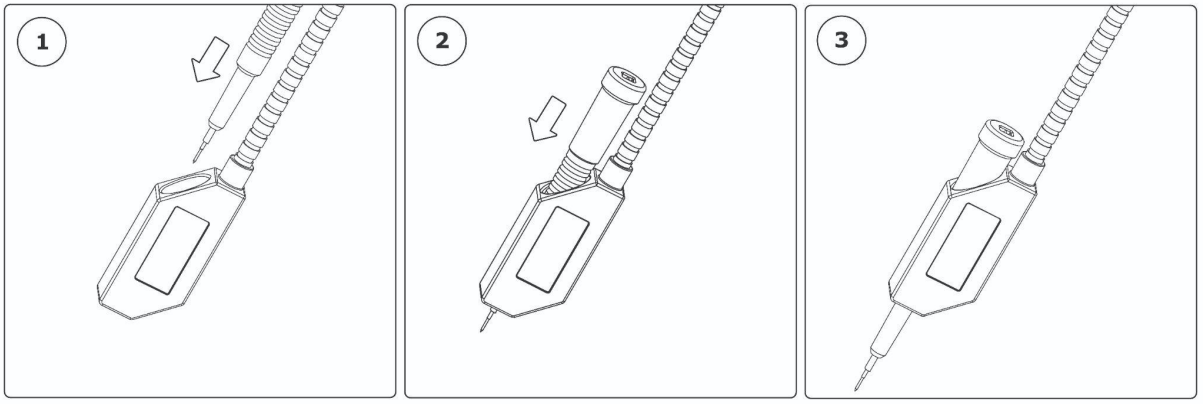

Dismounting the probe

1. Take a firm grip on the probe handle
2. Pull the probe straight and gentle until it loosens
3. Remove the probe from the probe arm

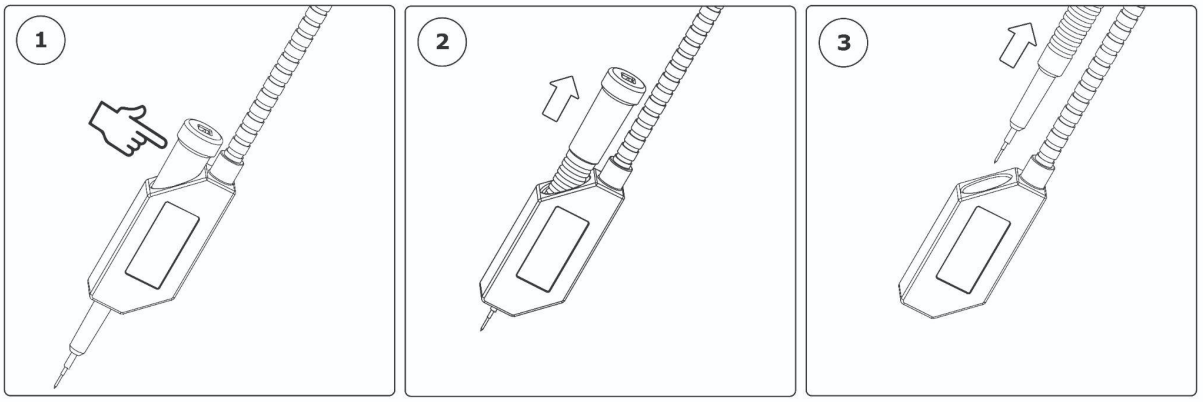

Position the probe - Place the probe foot on the base plate and the magnet will keep it in place.

Reposition the probe - Slide the probe foot on the base plate

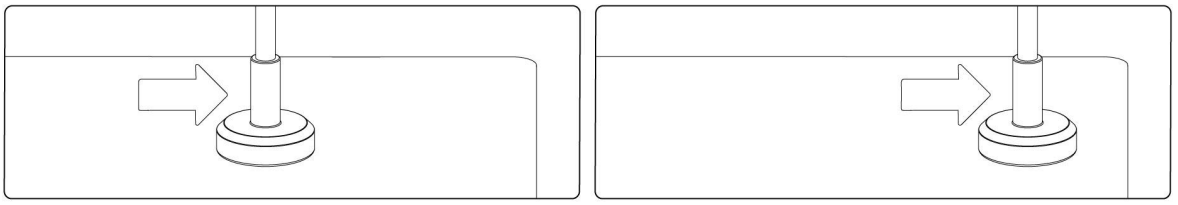

Detaching the probe - Tilt the probe foot gently and remove the probe arm. Avoid pulling on the flexible arm!

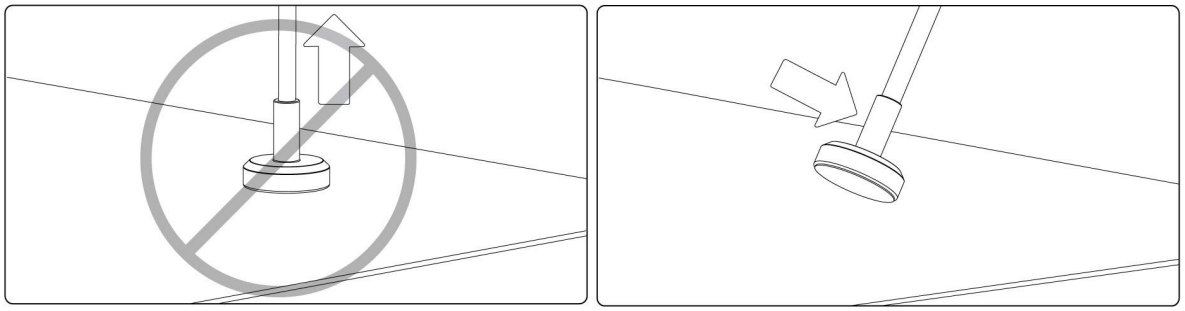

Measuring with the probe

1. Position the arm in 45 degree angle
2. Lift the probe in the probe grip
3. Compress the needle to the measuring target
4. Release the probe grip gently

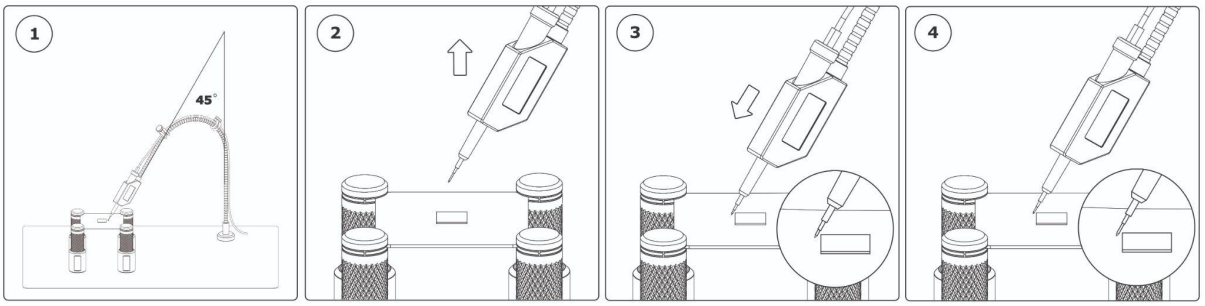

Probe needle replacement

1. Notice the replaceable needle tip. Please be aware of the sharp needle tip!
2. Pull out the replaceable needle tip by hand or use pliers.
3. Pick up the new needle tip and insert it in the sleeve with pliers.

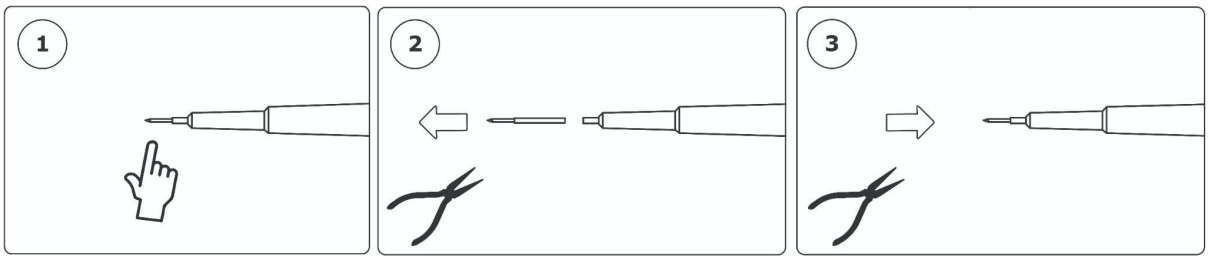

Specifications

Model	SQ10
Bandwidth > (MHz)*	10
Rise time (ns), calculated	34
Attenuation Ratio	1
Needle Resistance (ohm) <	0.02
Full-scale measurement range (for safe operation) Maximum Input: 1:1 Input Voltage, Fulfill the signal voltage limits of EN 61010-031:2015	Voltage: +/-60 V DC, 30 V AC RMS, +/-42.4 V pk max.
Overvoltage protection (voltage that will not damage)	200 V DC + peak AC
Maximum DC current (A)	2
Operating Environment, Max. altitude 2km	-40 to +80 °C, 0 to 80% RH
Storage Environment, Max. altitude 15km	-40 to +80 °C, 0 to 80% RH
Probe tip diameter (mm)	0.5
RoHS and REACH compliant	Yes

*The probe and cable are not impedance matched and are suitable for measurements below 10MHz, frequencies above 10 MHz can still be measured but with increased signal distortion on rising and falling edges using an oscilloscope. The probe and cable are tested above 25 MHz with correct data decoding with common logic analyzer.