Multimec™ 5G

High performance tactile switches • MIL-PRF-28855H • excellent illumination

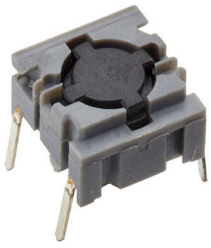

DISTINCTIVE FEATURES

Large range of accessories
Momentary switches with NO or NC/NO function
Sealed to IP67
Single or bi-color illumination option
Illumination with integrated chip-LEDs

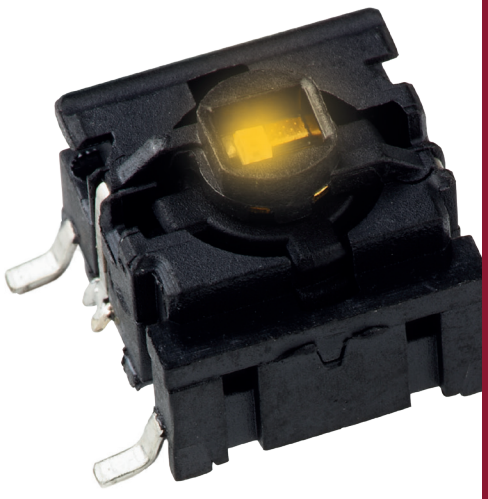

ENVIRONMENTAL SPECIFICATIONS

- Sealing : IP67 according to IEC 60529
- Working and storage temperature :
  - non-illuminated: -40 °C/+160 °C (-40 °F to +320 °F)
  - illuminated: -30 °C/+85 °C (-22 °F to +185 °F)
- Soldering :
  - through-hole : IEC 60068-2-20 8
  - surface mount : JEDEC J-STD-020E

ELECTRICAL SPECIFICATIONS

- Recommended load :
  - Gold contacts : 0.5µ-50 mA 24 VDC
  - Silver contacts : 0.5-50 mA 24 VDC
- Contact resistance : <30 mΩ - typically 10 mΩ
- Insulation resistance : >10 MΩ
- Contact bounce : <2 mS - typically 0.5 mS

MECHANICAL SPECIFICATIONS

- Standard actuation force :
  - momentary NO : 2.0 N, 3.5 N, 6.5 N
  - quiet version : 2.0 N
  - NC/NO function : 3.5 N
- Max. actuation force :
  - momentary : 115 N for 60 sec (according to MIL-PRF-22885H)
  - NC/NO : 100 N for 10 sec
- Travel : 1 mm
- Lifetime :
  - NO : >10,000,000 cycles
  - NC/NO : >1,000,000 cycles

The company reserves the right to change specifications without notice.

MATERIALS

- Housing : PPS UL94V0
- Actuator : PPS UL94V0
- Sealing : Silicone rubber
- Contacts spring : Stainless steel
  Silver : +3 µAg
  Gold : +1 µAu
- Fixed contacts :
  Silver : SnCu + 2 µNI + 3 µAg
  Gold : SnCu + 2 µNI + 1 µAu
- Terminals : SnCu + 2 µNI + 3 µSn100

All tolerance if not otherwise specified ±0.2 mm.

sales@prom-elec.com / ООО ПРОМЭЛЕКТРОНИКА

Multimec™ 5G

High performance tactile switches • MIL-PRF-28855H • excellent illumination

5G NON-ILLUMINATED

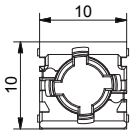

- SMD, TH or right angle TH
- NO or NC/NO

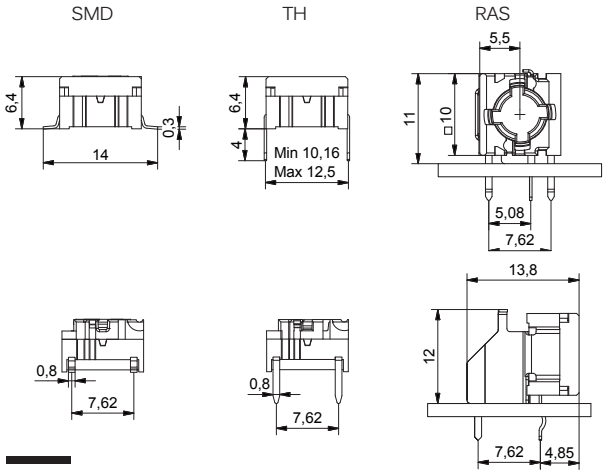

5G ILLUMINATED

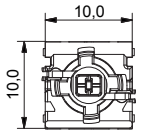

- SMD or TH
- NO
- single or bi-color LEDs

All tolerances unless otherwise noted : ±0.2 mm

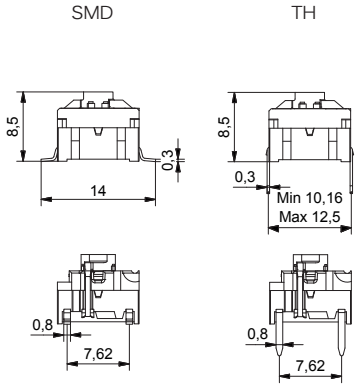

PCB LAYOUT & CIRCUIT DIAGRAM

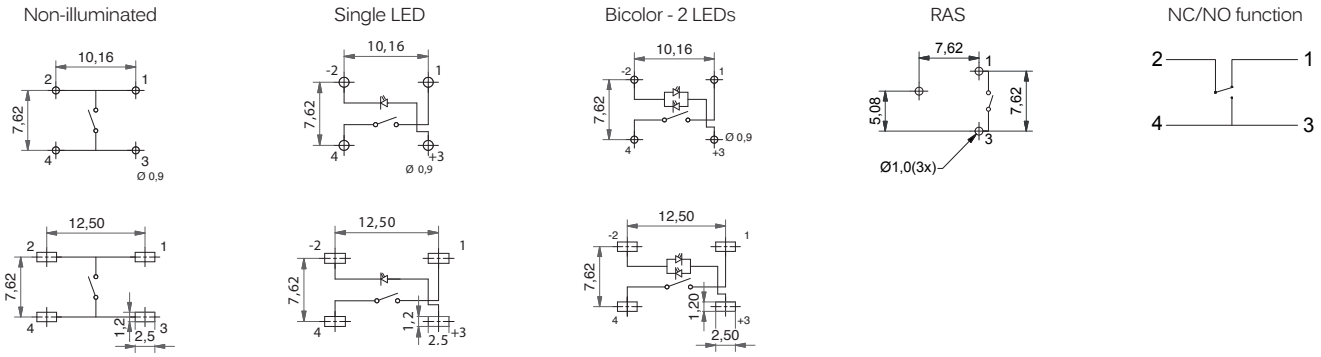

Multimec™ 5G

High performance tactile switches • MIL-PRF-28855H • excellent illumination

BUILD YOUR PART NUMBER

ILLUMINATED

5G — ___ — ___ — ___ — ___

SERIES

MOUNTING

TH9	Through-hole
SH9	Surface mount

ACTUATION FORCE

20	2.0 N
35	3.5 N
65	6.5 N

LED

02	Blue
22	Green
29	High intensity Green
42	Yellow
61	White
82	Red
2242	Green/yellow
8222	Red/green
8242	Red/yellow

OPTIONAL

Q	Quiet contact (with 2.0 N only)
R	Tape & reel (with SMD only)
G	Gold contacts

NON-ILLUMINATED

5G — ___ — ___ — ___

SERIES

MOUNTING

TH9	Through-hole
SH9	Surface mount

ACTUATION FORCE

20	2.0 N
35	3.5 N
65	6.5 N

OPTIONAL

Q	Quiet contact (with 2.0 N only)
RAS	Right angle (with TH only)
NCNO	Normally closed/ normally open function (with 3.5 N only)
R	Tape & reel (with SMD only)
G	Gold contacts

ABOUT THIS SERIES

Laser marking on the switch for identification : WWYS, WW=week, Y=year, S=suffix for the type of switch, e.g. P=2.0 N and silver contacts, S=3.5 N and silver contacts, E6.5 N and silver contacts

Caps and accessories : for the full range of accessories for Multimec™ 5G please see the website.

Multimec™ 5G

High performance tactile switches • MIL-PRF-28855H • excellent illumination

TAPE & REEL

Tape and reel is available for the parts listed and has the following specifications

- Reel diameter: Ø330 mm
- Tape width: 24 mm
- Pitch: see list
- Tape and reel material: antistatic or better
- Quantity per reel: see list

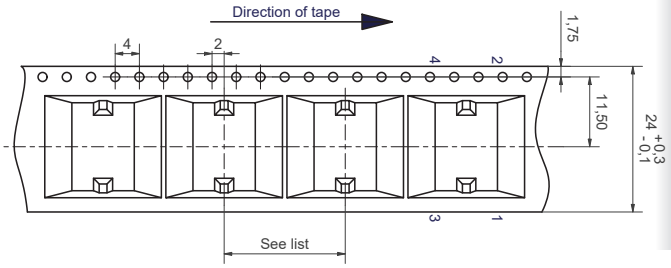

PART NO.	ORDERING CODE	PITCH	QUANTITY PER REEL
5GSH9XX	5GSH9XXR	16	500
5GSH9XX1SSXX-08.0	5GSH9XXR1SSXX-08.0	20	250
5GSH9XX1SSXX-09.5	5GSH9XXR1SSXX-09.5	20	250
5GSH9XX1SSXX-10.4	5GSH9XXR1SSXX-10.4	20	250
5GSH9XX1SSXX-11.0	5GSH9XXR1SSXX-11.0	20	250
5GSH9XX1SSXX-12.0	5GSH9XXR1SSXX-12.0	20	250
5GSH9XX02	5GSH9XX02R	20	250
5GSH9XX22	5GSH9XX22R	20	250
5GSH9XX29	5GSH9XX29R	20	250
5GSH9XX42	5GSH9XX42R	20	250
5GSH9XX61	5GSH9XX61R	20	250
5GSH9XX82	5GSH9XX82R	20	250
5GSH9XX2242	5GSH9XX2242R	20	250
5GSH9XX8222	5GSH9XX8222R	20	250
5GSH9XX8242	5GSH9XX8242R	20	250

OPERATING FORCE

2.0 N

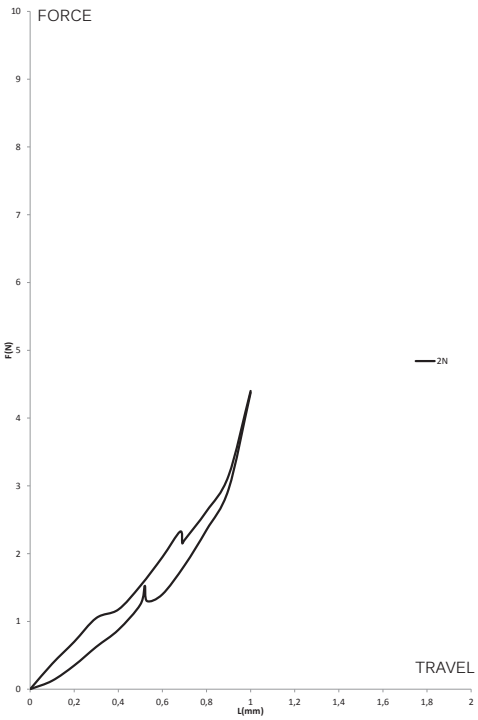

3.5 N

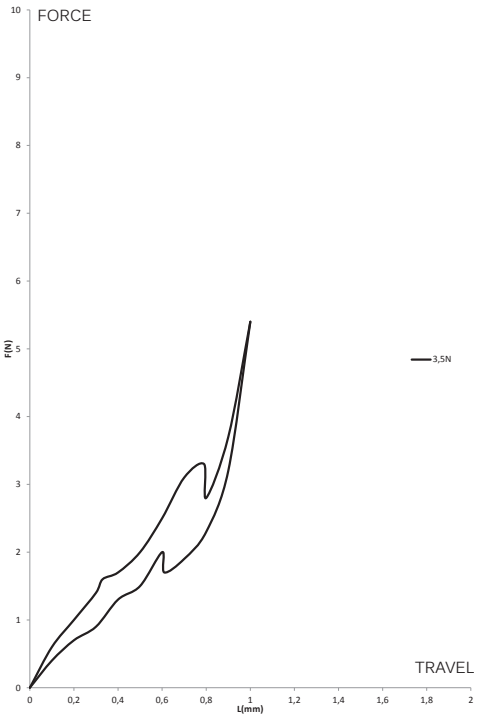

6.5 N

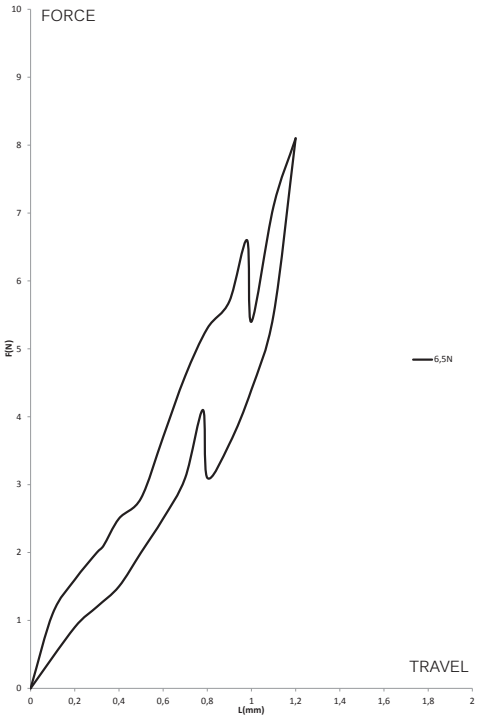

Multimec™ 5G

High performance tactile switches • MIL-PRF-28855H • excellent illumination

MOUNTING

MOUNTING TOOLS FOR MULTIMEC™ THROUGH-HOLE SWITCHES

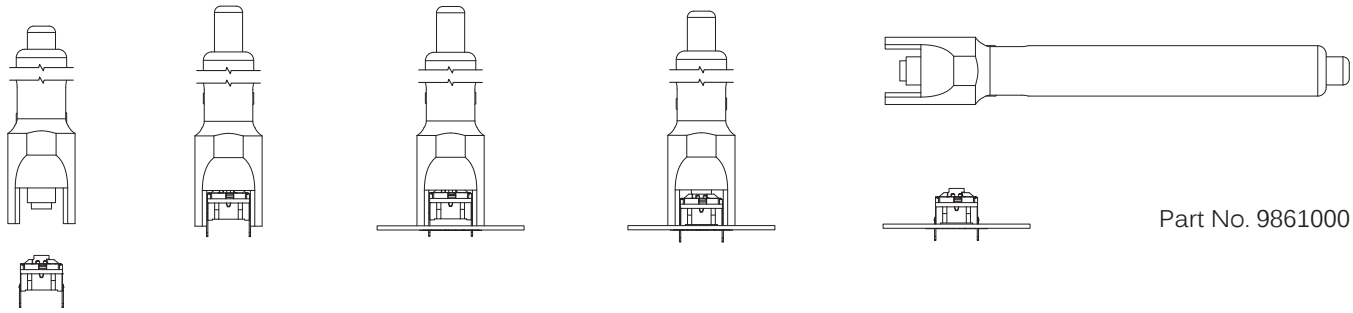

Part No. 9861000

1 2 3 4 5

SPACE REQUIREMENT - MATRIX MOUNTING

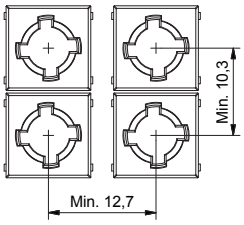

Through-hole (TH)

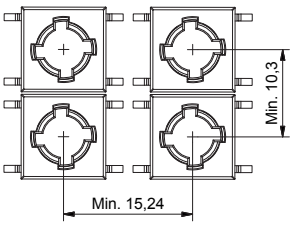

Surface mount (SMD)

MULTIMEC™ SPACING EXAMPLES

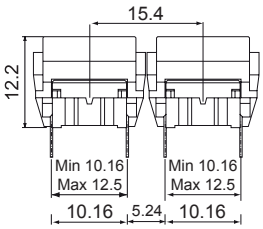

5GT+1B+2C/D

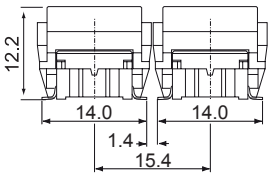

5GS+1B+2C/D

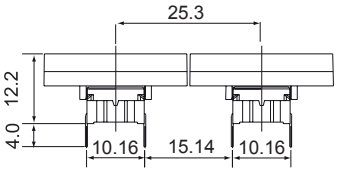

5GT+1M

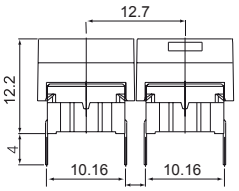

5GT+1A/H

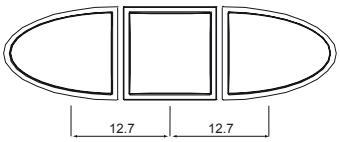

1VS+1TS+1VS

Multimec™ 5G

High performance tactile switches • MIL-PRF-28855H • excellent illumination

MOUNTING (CONTINUED)

SPACE REQUIREMENT - SWITCH/CAP

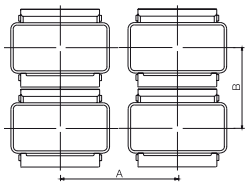

Switch spacing

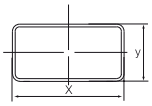

Cap dimensions

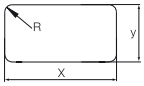

Panel cut-out

CAP SERIES	RECOMMENDED MIN.SWITCH SPACING AxB	NOMINAL CAP DIMENSION WxH	RECOMMENDED MIN. PANEL CUT-CUT
1A/1H	12.7x10.3	12.6x10.1	13.0x10.5
1B+2C/2D	15.4x15.4	15.1x15.1	15.5x15.5
1DS/1ES/1FS	12.7x11.3	Ø9.6	Ø10.0
1GAS	12.7x11.3	Ø11.0	Ø11.4
1GCS	15.3x15.3	Ø15.0	Ø15.4
1JS	12.7x10.3	Ø10.0	Ø10.4
1KS/1KBS/1KCS	14.6x14.6	14.3x14.3	14.7x14.7
1M	25.3x10.3	25x10	25.7x10.5
1NS	13.6x11.3	Ø9.8/ □4.9	Ø10.2/□5.1
1PS/ 1QS/1RS	12.8x10.3	6.5x12.5	7x13, R max. 1.0
1SS/1IS/1LS	12.7x10.3	Ø6.5	Ø7.0
1TS	12.7x12.3	10.6x10.6	11.0x11.0
1US	12.7x12.3	Ø10.6	Ø11.0
1VS	15.95x12.1	10.6x13.25	11.0x13.65
1WAS/1WPS	14.2x10.3	12.5x6.5	12.9x6.9
1WDS	16.9X10.3	15.2x8.0	15.6x8.4
1XS	12.7x10.3	9.4x7.4	9.8x7.9
1ZA	19.0X10.3	18.7x10.1	19.4x10.5
1ZB	24.34x12.1	R1=7.4; R2=17.5 90°	R1=7.1; R2=17.5-17.75 90°
1ZCS	14.6x14.6	Ø14.3	Ø14.7
1Z/1ZW	35.5x35.5; 41.6x41.6	Ø29.5	Ø30.3
10C	22.3x22.3	Ø19.2	Ø19.8
10R/10RF/10RM	37.3X37.3	Ø30.0	Ø30.6
10Q/10QM	29.3X29.3	22x22	22.5x22.5

Multimec™ 5G

High performance tactile switches • MIL-PRF-28855H • excellent illumination

LED COMPONENT SPECIFICATIONS

LED COMPONENT SPECIFICATIONS							
Color		Blue	Green	Yellow	White	Red	High Intensity Green
Color Codes		02	22	42	61	82	29
ABSOLUTE MAXIMUM RATINGS (Ta= 25°C)							
Power	mW	75	75	60	46.5	65	102.5
Current forward	mA	20	30	25	15	25	25
Forward peak current	mA	100	80	60	100	100	150
Voltage reverse	V	5	5	5	5	12	5
Operating temperature	°C	-40/+85	-55/+85	-40/+85	-40/+85	-30/+85	-40/+85
Storage temperature	°C	-40/+90	-55/+85	-40/+90	-40/+85	-40/+85	-40/+85
Soldering temperature	°C	245 for max 10 sec					
ELECTRICAL-OPTICAL CHARACTERISTICS (Ta=25 °C)							
Voltage forward	Typ. V	2.7	2	1.75**	2.85	2	3.3
	Max. V	3.7	2.4	2.35	3.1	2.5	4.1
Current reverse (VR=5V)	Max. µA	50	100	10	10	100	50
Wave length	nm	468	571	591	NA	633	525
Spread	△nm	25	NA	15	NA	16	30
Spread angle	degree	120	130	120	150	160	60
Luminous Intensity	Min. mcd	45	18	28.5	56	28	500
	Typ. mcd	112*	35	72*	max 450*	max 180*	1000
Optical intensity	Lm/w	NA	NA	NA	36	7	NA

*/F=20 mA, **Pulse width 1ms Duty cycle 1:5, ***/F=50 mA, ****Luminous Flux mlm

Multimec™ 5G

High performance tactile switches • MIL-PRF-28855H • excellent illumination

USAGE GUIDELINES

HOW TO GET THE BEST RESULTS WITH MEC SWITCHES ?

These guidelines are offered to users of MEC Switches as an aid to ensure successful and reliable switch operation. Please see the technical specifications for details on operating and storage temperatures and soldering guidelines to make sure you select the best switch for your application. When reflow soldering is taking place, MEC strongly recommend that the temperature profile is analyzed and compared with the temperature rating of the switch. It is also important to monitor the accumulated heat buildup from both the pre-heat zones and the solder zone.

Most standard accessories for multimec™ 5 series switches are made from ABS plastic with a maximum operating temperature of 65 °C. It is strongly recommended that accessories are mounted after soldering of the switch. If this is not possible care must be taken not to overheat the accessories during the soldering process. The 1SS and 1GAS/1GCS caps are, however, made of high temperature materials and will meet the same temperature specifications as the switches. For accessories made from other plastic materials please see multimec™ 5 series cap & bezel technical specifications.

LEDs have their own temperature specifications. When fitted in a switch the LED will determine the max. operating temperature, i.e. 5GTH93522 has an upper temperature limit of 85 °C!

MOUNTING AND DISMOUNTING

If switches are to be mounted in rows it is essential that the recommendations regarding spacing are followed. PC board thickness should be 1.4 ±0.2 mm and terminal hole diameter should be 0.9 mm.

All multimec™ 5 series caps and bezels are easily snapped onto the switch modules and can be changed at a later time.

A mounting tool is available for through hole multimec™ 5 series switches.

SOLDERING AND CLEANING MULTIMEC™ SERIES

Multimec™ 5 series switches are fully sealed to IP67 specifications to minimize solder flux and aqueous based cleaning solutions from entering the switch and contaminating the contacts. The switches can be placed on the PC board with other components and reflow soldered. Multimec™ 5 series offers a high level of sealing, however, with aqueous solvent solutions care must be taken to avoid the worst case situation with water jets, complete immersion into a liquid with a temperature below the board or surface tension reducing additives.

Recommended cleaning methods are demineralized water. Any surface tension reducing agents, such as soap, must not be used as they risk causing a potential leakage of the switch.

SOLDERING - THROUGH HOLE VERSIONS

Hand soldering: max. 350 °C for max. 3 sec

Wave soldering: heat built up in the switch during pre-heating and soldering must not exceed the maximum operating temperature of the switch. Peak temperature must not exceed 260 °C, and soldering time is max 10 sec. (IEC 60068-2-20 8)

SOLDERING - SURFACE MOUNT VERSIONS

For all methods - infrared, convection and vapor phase. The upper limit 240 °C/40 sec must be observed. The soldering temperature profile must have moderate temperature gradients. (JEDEC J-STD-020E)

ROHS COMPLIANCE

As of 1 July 2006 MEC has completed the conversion to RoHS compliance. For more info please see our homepage www.apem.com

TEMPERATURE LIMITS:

Switch	160 °C
LEDs	85/90 °C
Accessories	65/85/160 °C

PACKAGING

Multimec™ 5 series switches are packed in rigid tubes of 50 pieces each.
A box contains 1.000 pcs.

The surface mount versions of multimec™ 5 series switches with a height up to 12.5 mm can also be delivered on tape/reel.
Each reel contains 250/500 pcs.

Right angle switches are packed into trays.
Each tray contains 100 pcs.