SPECIFICATION
产品规格书

REFOND P/N 产品型号

RF-W7SA50TS-A51-IC

□R&D 研发
■Mass Product 量产供货

sales@prom-elec.com / ООО ПРОМЭЛЕКТРОНИКА

Contents 目录

1. Description 产品介绍 3
1.1General Description 产品描述 3
1.2Features 产品特征 3
1.3Application 产品应用 4
1.4Package Dimension 封装尺寸 5
1.5Product Parameters 产品参数 6
1.6Bin Range Of C.I.E Chromaticity Diagram CIE 色度图 10
2. Packaging 产品包装 13
2.1 Packaging Specification 包装规格 13
2.1.1Carrier Tape Dimension 载带尺寸 13
2.1.2Reel Dimension 卷盘尺寸 13
2.1.3Label Form Specification 标签规格 13
2.2Moisture Resistant Packing 防潮包装 14
2.3Cardboard Box 包装纸箱 15
2.4 Reliability Test Items And Conditions 信赖性测试项目及条件 15
2.5 Criteria For Judging Damage 失效判定标准 16
3. SMT Reflow Soldering Instructions SMT 回流焊说明 18
3.1SMT Reflow Soldering Instructions SMT 回流焊说明 18
4. Handling Precautions 产品使用注意事项 21
4.1 Handling Precautions 产品使用注意事项 21

1. Description 产品介绍

1.1General Description 产品描述

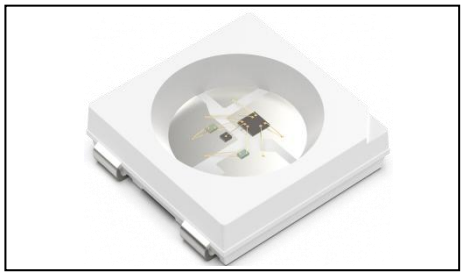

The Red source color devices are made with AlGaInP on Substrate Light Emitting Diode
红光 LED 由 AlGaInP 四种元素芯片激发而成
The Green source color devices are made with InGaN on Substrate Light Emitting Diode
绿光 LED 由 InGaN 三种元素芯片激发而成
The Blue source color devices are made with InGaN on Substrate Light Emitting Diode
蓝光 LED 由 InGaN 三种元素芯片激发而成
The IC chip receives the signal to control other chips free combination luminescence.
IC芯片通过接收信号从而控制其它芯片自由组合发光
The LED package dimension: 5.4mmX5.0mmX1.58mm.
产品尺寸：5.4mmX5.0mmX1.58mm。

1.2Features 产品特征

►PLCC-4 Package. PLCC-4封装

►Extremely wide viewing angle.发光角度大

►Suitable for all SMT assembly and solder process.适用于所有的SMT组装和焊接工艺

►Available on tape and reel.适用于载带及卷轴

►Moisture sensitivity level: Level 5.防潮等级 Level 5

►RoHS compliant.满足RoHS要求

1.3Application 产品应用

► Article color lamp, lamp belt. 彩色灯条、灯带

► Landscape lighting，Trademark logo.景观照明，招牌字

►General indoor uses.其他室内应用

1.4Package Dimension 封装尺寸

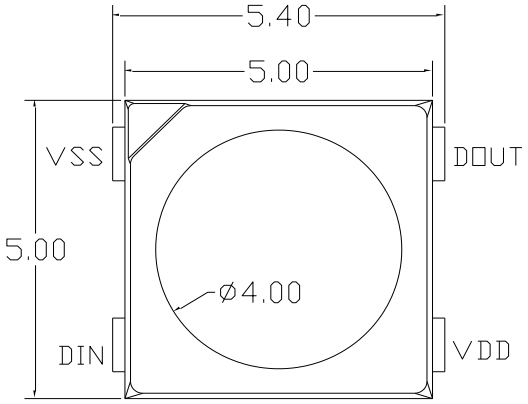

Fig.1-1 Top view 正面视图

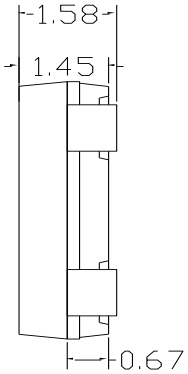

Fig.1-2Side view 侧面视图

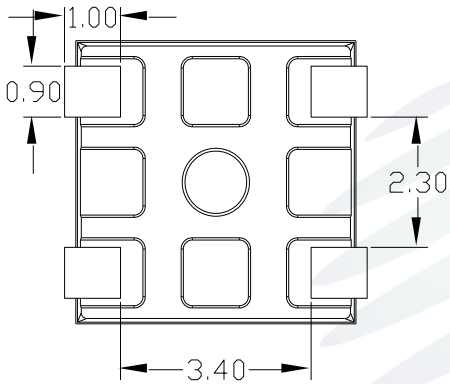

Fig.1-3Bottom view 背面视图

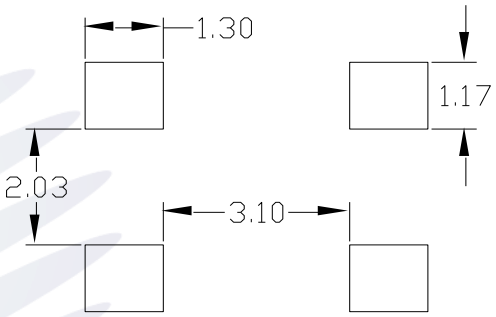

Fig.1-4 Soldering patterns 推荐焊盘

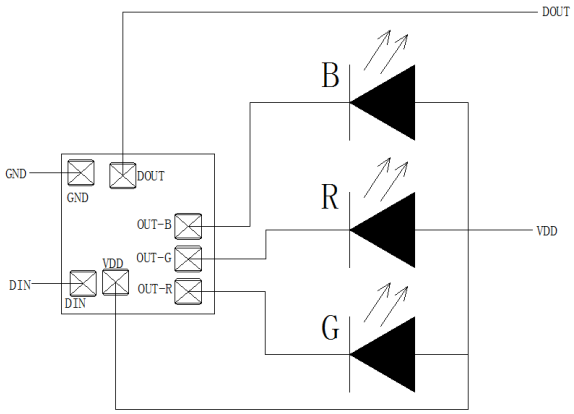

Fig.1-5 Polarity 极性

NO.	Symbol	Function description
1	VDD	Power supply LED
2	DOUT	Control data signal output
3	VSS	Ground
4	DIN	Control data signal input

Notes 备注：

1. All dimensions units are millimeters. 所有尺寸标注单位为毫米

2. All dimensions tolerances are ±0.2mm unless otherwise noted.除特别标注外，所有尺寸公差为±0.2 毫米

1.5Product Parameters 产品参数

Table 1-1 Electrical / Optical Characteristics at Ts=25°C 电性与光学特性

Item 项目	Symbol 符号			Test Condition 测试条件	Value			Unit 单位
					Min.	Max.	Typ.	
Luminous Intensity 光强	IV	R	RI	VDD=5V	280	650	484	mcd
		G	GI		900	1500	1284	mcd
		B	BI		150	450	265	mcd
Dominant Wavelength 波长	WLD	R	R01	VDD=5V	619	624	621	nm
		G	E00		520	525	526	nm
			F00		525	530		nm
		B	D00		465	470	468	nm
			E00		470	475		nm
Viewing Angle （发光角度）	2θ1/2	-	-	VDD=5V	-	-	120	deg

Table 1-2 Absolute Maximum Ratings at Ts=25°C 绝对最大值

Parameter（参数）	Symbol（符号）	Ratings（值）	Unit（单位）
Power supply voltage （工作电压）	VDD	5.5	V
Operating Temperature ）（操作温度）	Topr	-40 ~ +85	℃
Storage Temperature（存储温度）	Tstg	-40 ~ +100	℃

Table 1-3 IC Parameters Absolute Maximum Ratings at T_A=25°C IC参数绝对最大值

Parameter（参数）	Symbol（符号）	Ratings（值）	Unit（单位）
Power supply voltage（工作电压）	VDD	-0.4~+5.5	V
Logical input voltage（逻辑输入电压）	V_I	-0.4~VDD+0.4	V
Operating Temperature（操作温度）	T_{OPR}	-40 ~ +85	°C
Storage Temperature（存储温度）	T_{STG}	-40 ~ +100	°C
Out R/G/B voltage（端口耐压）	BV_{OUT}	16	V
Electrostatic Discharge（HBM 静电）	V_{ESD}	2	KV
Port default output current（端口默认输出电流）	OUT R/G/B	12	mA

Table 1-4 IC Electrical characteristics at T_A==25℃,VDD=5.0V IC电气特性

Parameter（参数）	Symbol（符号）	Test Condition（测试条件）	MIN（最小值）	TYP（典型值）	Max（最大值）	Uint（单位）
IC operating voltage（IC 工作电压）	VDD	---	3.5	---	5.5	V
Quiescent Current (静态电流)	I_{DD}	VDD=4.5V I_{out}="off"	---	0.65	---	mA
DIN Threshold Voltage（信号输入阈值电压）	V_{IH}	DIN 输入高电平	0.7xVDD	---	---	V
	V_{IL}	DIN 输入高电平	---	---	0.3xVDD	V
OUT R/B（恒流拐点电压）	V_{DS_S}	I_{out}=12mA	---	0.5	---	V
OUT G（恒流拐点电压）			---	0.7	---	V
DOUT 输出电流	I_{OH}	DOUT 输出高，串接 10Ω 电阻	---	-42	---	mA
DOUT Irrigation current	I_{OL}	DOUT 输出低，电源对 DOUT 灌电流	---	55	---	mA

（DOUT 灌电流）						
OUT R/G/B 端口漏电流	I_{leak}	VDS=15V;IOUT"off"	---	---	1	uA

Table 1-5 IC Switching characteristics at T_A==25℃,VDD=5.0V IC开关特性

Parameter（参数）	Symbol（符号）	Test Condition（测试条件）	MIN（最小值）	TYP（典型值）	Max（最大值）	Uint（单位）
OUT R/G/B 输出 PWM 频率	f_{PWM}	I_{OUT}=12mA，OUT 端口串接 200Ω 电阻至 VDD	---	1.0	---	KHZ
信号传输延迟	t_{PLH}	DOUT 端口对地负载电容 30pF，DIN 至 DOUT 的信号传输延时	---	67	---	ns
	t_{PHL}		---	82	---	ns
DOUT 转换时间	t_{TLH}	DOUT 短空对地负载电容 30pF	---	9.6	---	ns
	t_{THL}		---	11.6	---	ns
OUR R/B 转换时间	t_r	I_{OUT} R/B =12mA，OUT R/B 端口串接，200Ω电阻至 VDD，对地负载电容	---	22	---	ns
	t_f		---	75	---	ns
OUR G 转换时间	t_r	I_{OUT} G =12mA，OUT G 端口串接，200Ω电阻至 VDD，对地负载电容 30pF	---	18	---	ns
	t_f		---	110	---	ns

Dynamic parameter test （动态参数测试）

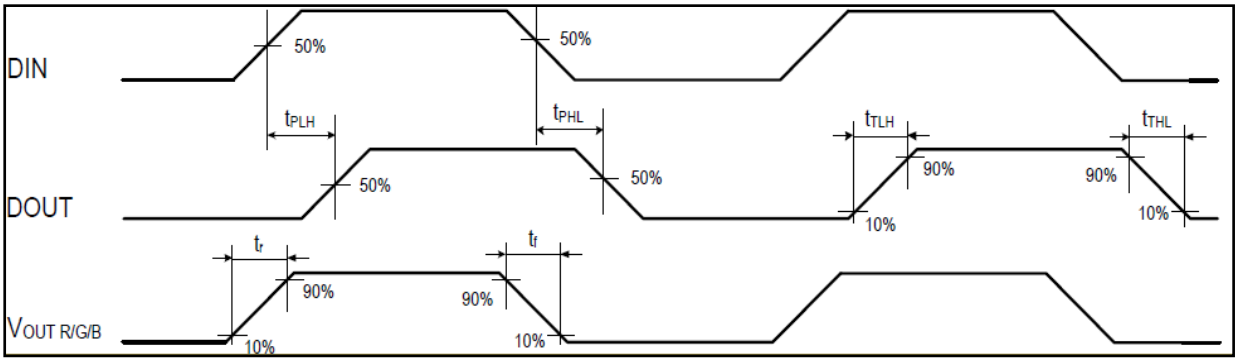

IC Data communication protocol IC 数据通信协议

IC 协议采用的是单极性归零码，每一个码元都必须有低电平，本协议的每个码元起始为高电平，高电平时间宽度决定“0”码或者“1”码；

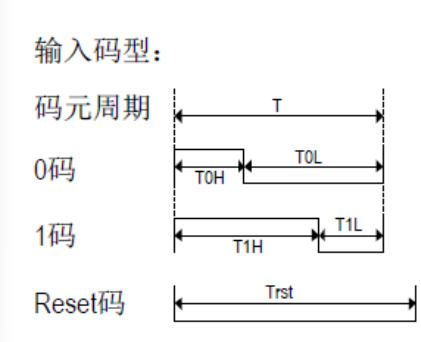

Parameter (参数)	Symbol (符号)	MIN (最小值)	TYP (典型值)	MAX (最大值)	Unit (单位)
码元周期	T	1200	-	-	ns
0 码，高电平时间	T0H	200	300	400	ns
0 码，低电平时间	T0L	800	900	-	ns
1 码，高电平时间	T1H	650	900	1000	ns
1 码，低电平时间	T1L	200	300	-	ns
Reset 码，低电平时间	Trst	200	-	-	ns

协议数据格式：Trst+第一颗芯片 24bits 数据+第二颗芯片 24bits 数据+……+第 n 颗芯片 24bits 数据+Trst，24bits 灰度数据结构：高位在前，按照 GRB 的顺序发送：

G7	G6	G5	G4	G3	G2	G1	G0	R7	R6	R5	R4	R3	R2	R1	R0	B7	B6	B5	B4	B3	B2	B1	B0

bit23 ---
bit0

1.6Bin Range Of C.I.E Chromaticity Diagram CIE 色度图

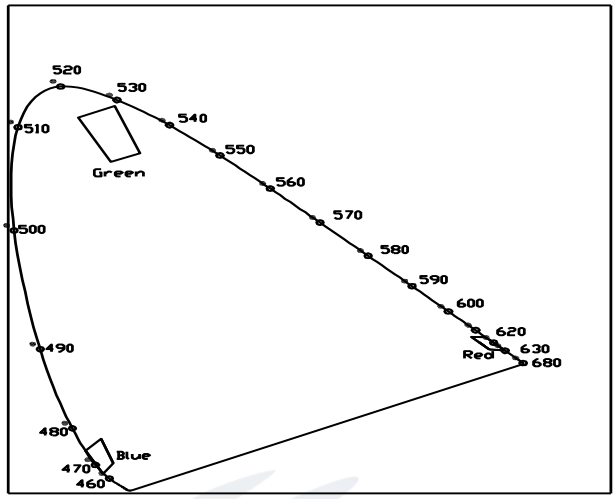

Fig 1-6 The C.I.E Chromaticity Diagram CIE色度图

Red Color Rank				
X	0.6597	0.6801	0.7079	0.6858
Y	0.3203	0.3197	0.2920	0.2942

Green Color Rank				
X	0.0997	0.1517	0.1875	0.1457
Y	0.7700	0.7936	0.6963	0.6793

Blue Color Rank				
X	0.1096	0.1321	0.1498	0.1355
Y	0.0868	0.1117	0.0613	0.0399

Typical application circuit （经典案例）

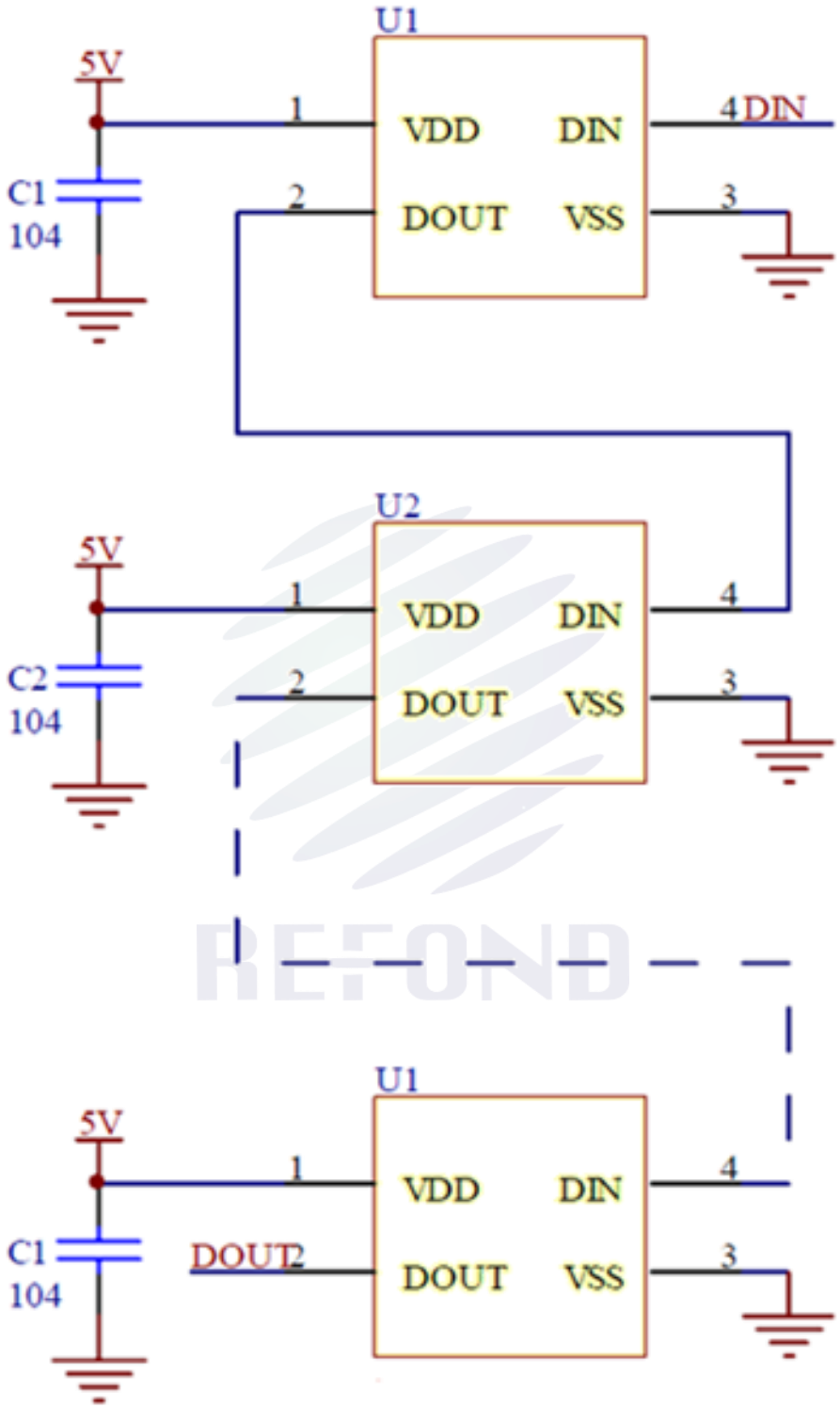

Notes 备注：

1. 1/10 Duty cycle, 0.1ms pulse width. 脉宽0.1ms,占空比1/10.

2. The above forward voltage measurement allowance tolerance is ±0.1V. 以上所示电压测量误差 ±0.1V.

3. The above wavelength measurement allowance tolerance is ±1nm. 以上所示波长测量误差±1nm.

4. The above luminous intensity measurement allowance tolerance ±10%. 上述发光强度的测试允许公差为±10%.

5. Care is to be taken that power dissipation does not exceed the absolute maximum rating of the product. 使用功率不能超过规定的最大值。

6. All measurements were made under the standardized environment of Refond. 所有测试都是基于瑞丰现有的标准测试平台。

7.When the LEDs are in operation the maximum current should be decided after measuring the package temperature，junction temperature should not exceed the maximum rate. LED 使用的最大电流需要根据散热条件确定，结温不能超过最大值。

2. Packaging 产品包装

2.1 Packaging Specification 包装规格

Package:MAX:1000pcs/reel.包装每卷最大包 1000pcs

2.1.1Carrier Tape Dimension 载带尺寸

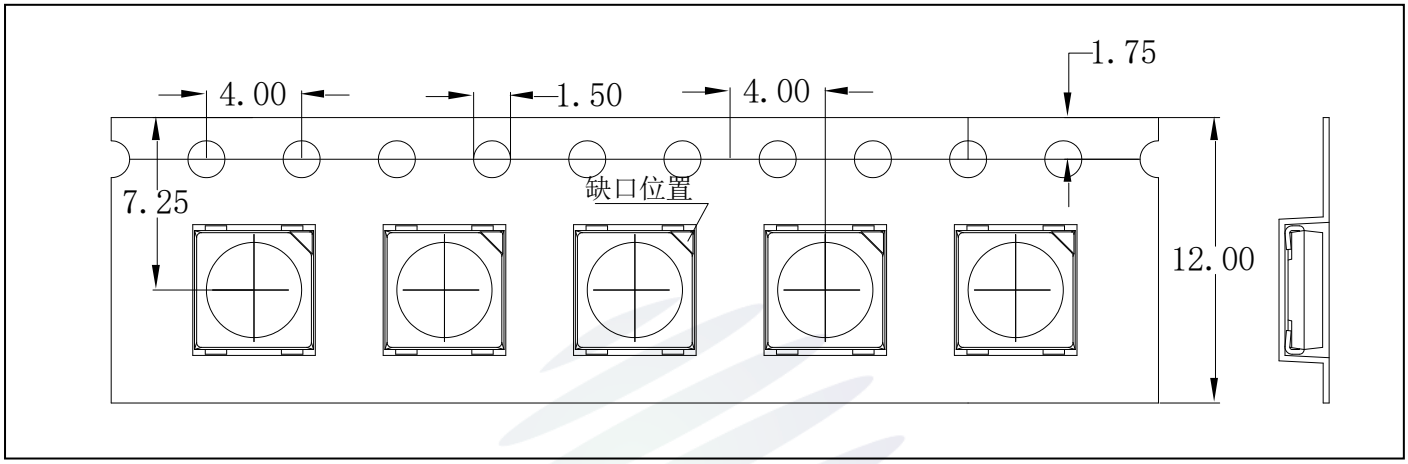

Fig.2-1 Carrier Tape Dimension 载带尺寸

2.1.2Reel Dimension 卷盘尺寸

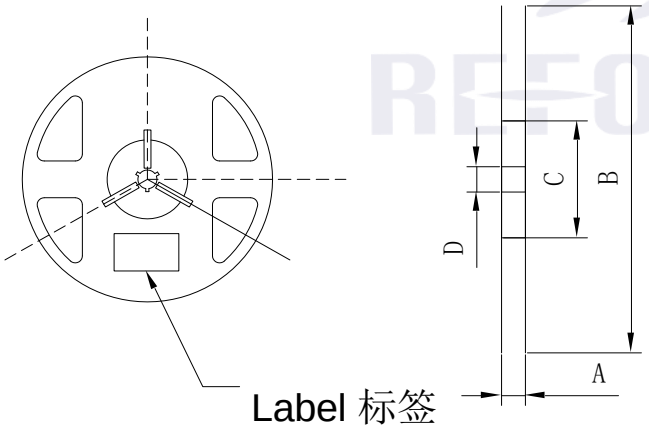

Fig.2-2Reel 卷盘

Table 2-1 Reel Dimension 卷盘尺寸

A	12.4±0.3mm
B	178±1mm
C	58.5±1mm
D	13.5±0.5mm

Notes 备注：

The tolerances unless mentioned ±0.1mm. Unit : mm注：未注公差为±0.1毫米，尺寸单位：毫米。

2.1.3Label Form Specification 标签规格

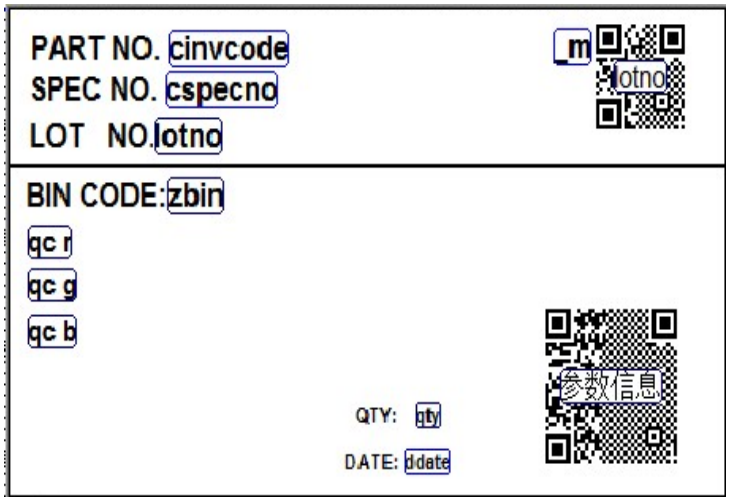

Fig 2-3 Label Form 标签模板

Table 2-2 Label Parameter 标签参数

PART NO.	Part Number 品名
SPEC NO.	Spec Number 规格
LOT NO.	Lot Number 批次号
BIN CODE	Bin Code 参数代码
I_V	Luminous intensity 光强
V_F	Forward Voltage 正向电压
WLD	Dominant Wavelength 主波长
QTY	Packing Quantity 数量
DATE	Made Date 生产日期

2.2Moisture Resistant Packing 防潮包装

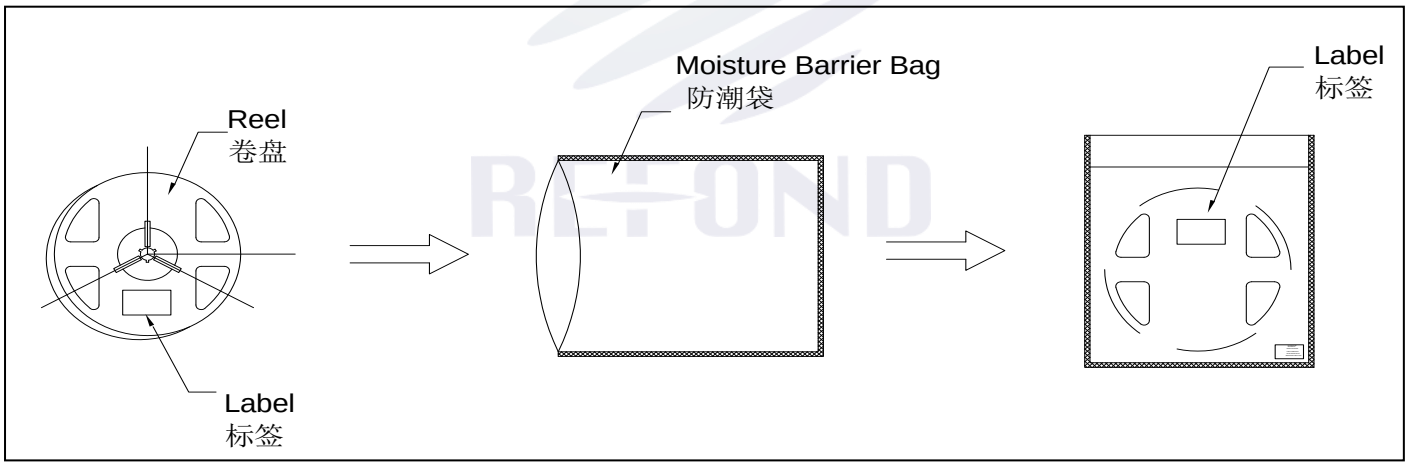

Fig.2-4Packing specification 包装说明

2.3Cardboard Box 包装纸箱

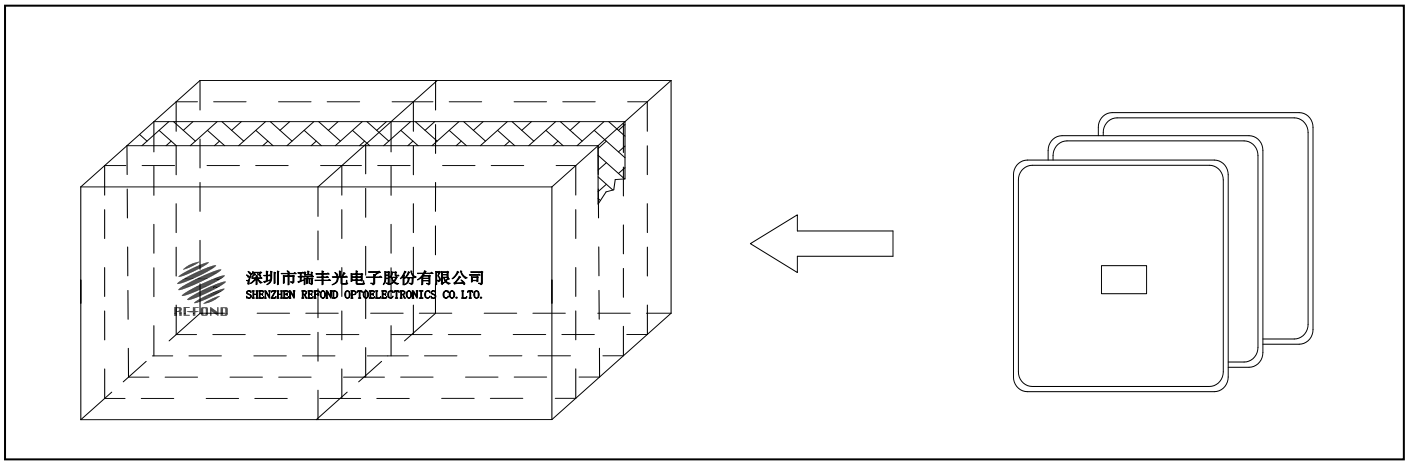

Fig.2-5Cardboard Box 包装纸箱

2.4 Reliability Test Items And Conditions 信赖性测试项目及条件

Table 2-3 Test items and conditions 测试项目及条件

Test Items 项目	Ref. Standard 参考标准	Test Condition 测试条件	Time 时间	Quantity 数量	Ac/Re 接收/拒收
Reflow 回流焊	JESD22-B106	T_{emp}:260℃Cmax T=10 sec	2times.	10pcs.	0/1
Thermal Shock 冷热冲击	JEITAED-4701 300307	-40℃ 15min ↑↓10s 100℃ 15min	100 cycle.	10pcs.	0/1
High Temperature Storage 高温保存	JEITAED-4701 200 201	T_{emp}:100℃	1000hrs.	10pcs.	0/1
Low Temperature Storage 低温保存	JEITA ED-4701 200 202	T_{emp}:-40℃	1000hrs.	10pcs.	0/1
Life Test 常温通电	JESD22-A108	T_A=25℃ V_F=5V	500hrs.	10pcs.	0/1

High Temperature High Humidity Life Test 高温高湿通电	JESD22-A101	60℃/ 90%R_H V_F=5V	500hrs.	10pcs.	0/1

2.5 Criteria For Judging Damage 失效判定标准

Table 2-4 Criteria for judging damage 失效判定标准

Test Items 项目	Symbol 符号	Test Condition 测试条件	Criteria For Judgement 判定标准	Applicable project 适用项目
Forward Voltage 电压	V_F	V_F=5V	≤±10%	Reflow Thermal Shock High and Low Temperature Storage Life Test
Luminous Intensity 光强（R&G）	I_V	V_F=5V	Maintenance≥70% 光强维持率	
Luminous Intensity 光强（B）	I_V	V_F=5V	Maintenance≥50% 光强维持率	
Lamp Bead Light Test 灯珠点亮测试	/	V_F=5V	No open circuit short circuit or flicke 无开路、短路、闪变	High Temperature High Humidity Life Test

Notes 备注：

1.The above reliability tests is based on the verification of a single/strip LED of Refond's existing experimental platform,the reliability experiment was taken under good heat dissipation conditions. when customers applies the LED to the series and parallel circuit, should take consideration of all the factors such as the current,

voltage distribution, heat dissipation and others.以上可靠性测试是基于瑞丰现有实验平台单颗/条 LED 在良好散热条件验证下的结果。客户端将 LED 应用于串、并联线路时，需自行评估电流、电压分配、散热等问题。

2.The technical information shown in the data sheets is limited to the typical characteristics and circuit examples of the referenced products. It does not constitute the warranting of industrial property nor the granting of any license. 以上技术数据仅为产品的典型值，只作为参考，不作为任何应用条件及应用方式的保证。

3. SMT Reflow Soldering Instructions SMT 回流焊说明

3.1SMT Reflow Soldering Instructions SMT 回流焊说明

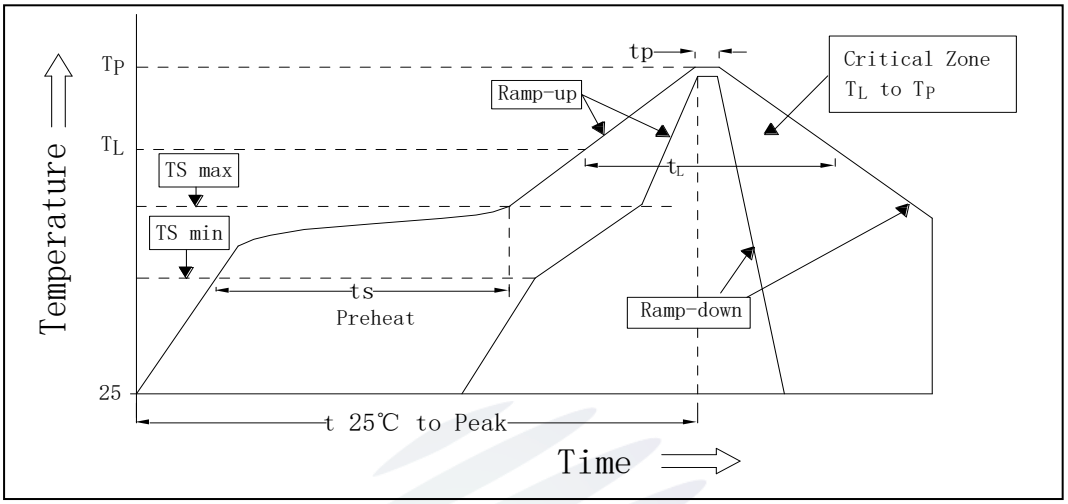

Fig.3-1SMT Reflow Soldering Instructions　SMT 回流焊说明

Table 3-1 SMT Reflow Soldering parameters SMT 回流焊参数

Average temperature rise speed平均升温速度	最高3°C/秒 Max 3 °C/ s
Preheating: minimum temperature预热：最低温度	150 °C
Preheating: Max temperature预热：最高温度	200 °C
Preheating: Time预热：时间（Tsmin　至Tsmax）	60 - 120秒　60s-120s
Time limited to maintain high temperature: the	217 °C
Time limited to maintain high temperature: The Time	最多60秒　Max 60s
Peak /Classification of temperature:峰值 / 分类温度	260 °C
Time limit classification of peak temperature time限时	最多10秒　Max 10s
与实际峰值温度 (TP) 相差 5 °C 以内的保持时间	最多30秒　Max 30s
降温速度　Cooling speed	最高6 °C/秒 Max 6 °C/ s
25 °C 升至峰值温度所需时间　Needed time fron	最多8分钟 Max 8minutes

Notes 备注：

(1)Reflow soldering should not be done more than two times. In the case of more than 24 hours passed soldering after first, LEDs will be damaged. 回流焊次数不可以超过两次，两次回流焊的时间间隔如果超过24小时，LED可能由于吸湿而损坏。

(2)When soldering，do not put stress on the LEDs during heating.当焊接时，不要在材料受热时用力压胶体表面。

3.1.1 Soldering Iron 烙铁焊接

(1) When hand soldering, keep the temperature of iron below less 300℃ less than 3 seconds 当手工焊接时，烙铁的温度必须小于300℃，时间不可超过3秒。

(2) The hand solder should be done only one time.手工焊接只可焊接一次。

3.1.2 Repairing 修补

Repair should not be done after the LEDs have been soldered. When repairing is unavoidable,a double-head soldering iron should be used (as below figure). It should be confirmed in advance whether the characteristics of LEDs will or will not be damaged by repairing.

LED回流焊后不应该修复，当必须修复时，必须使用双头烙铁，而且事先应确认此种方式会不会损坏LED本身的特性。

3.1.3 Cautions 注意事项

(1) The encapsulated material of the LEDs is silicone. Therefore the LEDs have a soft surface on the top of package. The pressure to the top surface will be influence to the reliability of the LEDs. Precautions should be taken to avoid the strong pressure on the encapsulated part. So when use the picking up nozzle, the pressure on the silicone resin should be proper. LED封装胶为硅胶，表面较软，用力按压胶体表面会影响LED可靠性，因此应有预防措施避免在按压器件，当使用吸嘴时，胶体表面的压力应是恰当的。

(2) Components should not be mounted on warped (non coplanar) portion of PCB. After soldering, do not warp the circuit board.LED 灯珠不要焊接在弯曲的 PCB 板上，焊接之后，也不要弯折线路板。

(3) Do not apply mechanical force or excess vibration during the cooling process to normal temperature after soldering. Do not rapidly cool device after soldering.回流焊之后冷却过程中，不要对材料实加外力，也不要有震动，回流焊后，不要采用激剧冷却的方式。

4. Handling Precautions 产品使用注意事项

4.1 Handling Precautions 产品使用注意事项

(1) LED operating environment and sulfur element composition cannot be over 100PPM in the LED mating usage material. This is provided for informational purposes only and is not a warranty or endorsement.LED 工作环境及与 LED 适配的材料中硫元素及化合物成份不可超过 100PPM.这只是一个建议，不作任何品质担保。

(2) In order to prevent ex- ternal material from getting into the inside of LED, which may cause the malfunction of LED, the single content of Bromine element is required to be less than 900PPM,the single content of Chlorine elementis required to be less than 900PPM,the total content of Bromine element and Chlorine element in the external materials of the application products is required to be less than 1500PPM. This is provided for informational purposes only and is not a warranty or endorsement.为了防止外界物质进入 LED 内部以造成 LED 的损伤，所处环境及所用套件等等，单一的溴元素含量要求小于 900PPM，单一氯元素含量要求小于 900PPM，溴元素与氯元素总含量必须小于 1500PPM. 这只是一个建议，不作任何品质担保。

(3) VOCs (Volatile organic compounds) emitted from materials used in the construction of fixtures can penetrate silicone encapsulants of LEDs and discolor when exposed to heat and photonic energy. The result can be a significant loss of light output from the fixture. Knowledge of the properties of the materials selected to be used in the construction of fixtures can help prevent these issues. Refond advises against the use of any chemicals or materials that have been found or are suspected to have an adverse affect on device performance or reliability. To verify compatibility, Refond recommends that all chemicals and materials be tested in the specific application and environment for which they are intended tobe used. Attaching LEDs, do not use adhesives that outgas organic vapor. 应用套件中的挥发性物质会渗透到 LED 内部，在通电产生光子及热的条件下，会导致 LED 变色，进而造成严重光衰，提前了解套件材料能够避免产生这些问题。瑞丰反对使用任何对 LED 器件的性能或者可靠性有害的物质或材料，不管这些材料是已经证实了的还是仅仅怀疑有害。针对特定的用途和使用环境，瑞丰建议对所有的物质和材料进行相容性的测试。在贴装 LED 时候，不要使用能产生有机挥发性气体的粘结剂。

(4) Handle the component along the side surface by using forceps or appropriate tools; do not directly touch or Handle the silicone lens surface, it may damage the internal circuitry.通过使用适当的工具从材料侧面夹取，不可直接用手或尖锐金属压胶体表面，它可能会损坏内部电路。

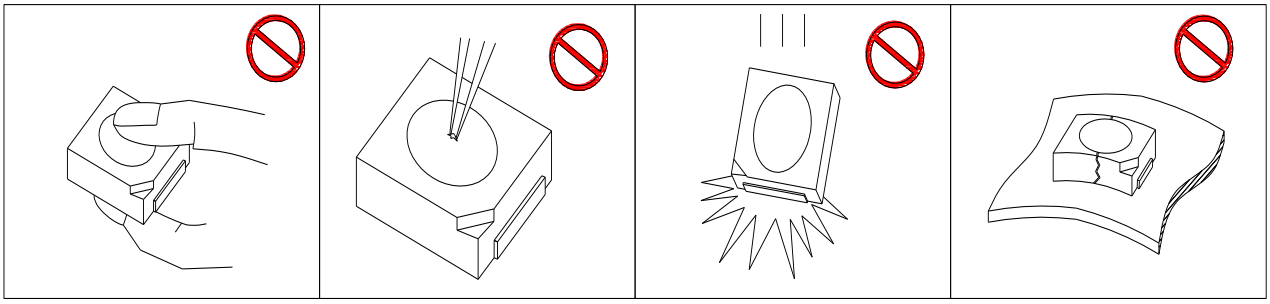

Fig 4-1Misoperation 错误操作

(5) In designing a circuit,the current through each LED must be exceed the absolute maximum rating specified for each LED.In the meanwhile,resistors for protection should be applied,otherwise slight voltage shift will cause big current change,burn out may happen. The driving circuit must be designed to allow forward voltage only when it is ON or OFF.If the reverse voltage is applied to LED, migration can be generated resulting in LED damage. 设计电路时，通过 LED 的电流不能超过规定的最大值，同时，还需使用保护电阻，否则，微小的电压变化将会引起较大电流变化，可能导致产品损毁。电路设计必须保证只有在开启或者关闭的时候出现正向电压的变化，不要施加反压，否则会损坏 LED。

(6) Thermal Design is paramount importance because heat generation may result in the Characteristics decline,such as brightness decreased,Color change and so on.Please consider the heat generation of the LEDs when making the system design.LED 容易因为自身的发热和环境的温度改变而改变，温度升高会降低 LED 发光效率，影响发光颜色，所以在设计时应充分考虑散热问题。

(7) Compared to standard encapsulants, silicone is generally softer, and the surface is more likely to attract dust，requiring special care during processing. In cases where a minimal level of dirt and dust particles cannot be guaranteed, a suitable cleaning solution must be applied to the surface after the soldering of components. Refond suggests using isopropyl alcohol for cleaning. In case other solvents are used, it must be assured that these solvents do not dissolve the package or resin. Ultrasonic cleaning is not recommended. Ultrasonic cleaning may cause

damage to the LED. 与其他封装胶相比，硅胶通常较软，表面易吸附脏物，应用时应特别注意，当对产品洁净度要求较高时，回流焊以后需要采用恰当的清洗方式，我们推荐用异丙醇作清洗剂，如需要用到其他清洗剂，必须保证不会破坏封装体，超声清洗可能会对 LED 带来损害，不推荐这种清洗方式。

Table 4-1Storage 储存

Conditions 种类		Temperature 温度	Humidity 湿度	Time 时间
Storage 储存	Before Opening Aluminum Bag 拆包前	≤30℃	≤75%	Within 4 Months From Date 4个月内
	After Opening Aluminum Bag 拆包后	≤30℃	≤60%	24hours 24小时
Baking 烘烤		60±5℃	<5%	≥24hours 大于24小时

(8) If the moisture absorbent material（silica gel）has faded away or the LEDs have exceeded the storage time，baking treatment should be performed after unpacking and based on the following condition（60±5）℃ for above 24 hours.如果干燥剂或包装失效，或者产品不符合以上有效储存条件，需拆包后进行烘烤，烘烤条件：60±5℃，大于 24 小时。

If the package is flatulence or damaged,please notify the sales staff to assist.如果包装胀气或者破损，请通知销售人员协助处理。

(9)Similar to most Solid state devices; LEDs are sensitive to Electro-Static Discharge (ESD) and Electrical Over Stress (EOS). 像其他的半导体电子器件一样，LED 对静电过流击穿非常敏感，需要做好防护。

(10) Other points for attention, please refer to our relevant information.其它注意事项请参照瑞丰相关资料。

Version History/修订历史

Date日期	Revisor修订者	Version版本	Verifier审核	Remarks备注
2021-5-6	姚胜坚	E1	陈华	版本升级
2022-2-10	刘明	E2	姚胜坚	增加发光角度
2022-2-21	刘明	E2	姚胜坚	增加色度图

瑞豐光電 REFOND
www.refond.com

Declare 申明

This specification is written both in English and in Chinese and the latter is formal.

产品规格书以中英文方式书写，若有冲突以中文版本为准。