TINA-D

~16° diffused spot beam optimized for CREE XP-E

TECHNICAL SPECIFICATIONS:

Dimensions	Ø 16.1 mm
Height	9.7 mm
Fastening	tape
Colour	white
Box size	470 x 240 x 105 mm
Box weight	4.2 kg
Quantity in Box	2016 pcs
ROHS compliant	yes

MATERIAL SPECIFICATIONS:

Component	Type	Material	Colour
TINA-D	Single lens	PMMA	clear
TINA-XP-H-TAPE-WHT	Holder	PC	white
TINA-TAPE3	Tape	PU tape	black

LEDiL is a registered trademark of LEDiL Oy in the European Union, USA, and certain other countries.

sales@prom-elec.com / ООО ПРОМЭЛЕКТРОНИКА

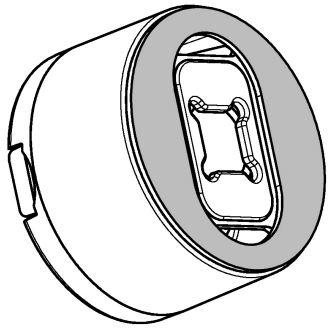

Isometric view

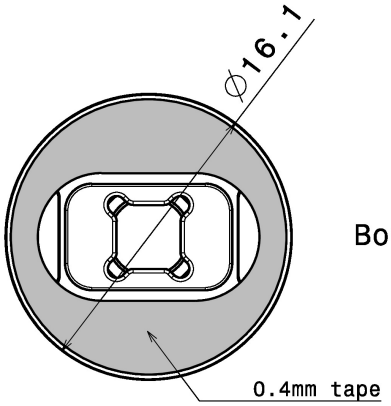

Bottom view

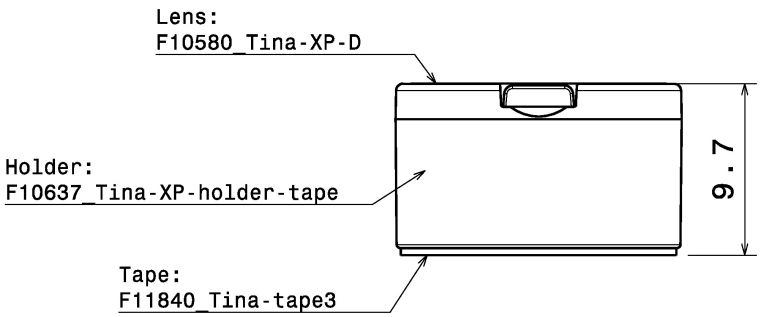

Front view

MATERIALS
Lens: PMMA
Holder: PC
Tape: PU Foam

Part No.s:
FA10644_Tina-XP-D
FA10644_Tina-XP-G-D
FA10644_Tina-Z5-D

This drawing is our property. It can't be reproduced or communicated without our written agreement.

Ledil Oy
Tehdaskatu 13
FIN-24100 SALO
Finland

DRAWN BY mav	DATE 09.03.2011	DRAWING TITLE Assembly Tina-XP D			
CHECKED BY tk	DATE 09.03.2011	SIZE A4	DRAWING NUMBER FA10644		REV 2
DESIGNED BY HH	DATE 22.07.2008	SCALE 2:1	WEIGHT(g) -		SHEET 1/1

PHOTOMETRIC DATA (MEASURED):

CREE

LED	XP-E
FWHM	14.0°
Efficiency	93 %
Peak intensity	9.580 cd/lm
LEDs/each optic	1
Light colour	White
Required components:	

CREE

LED	XP-G
FWHM	20.0°
Efficiency	93 %
Peak intensity	5.130 cd/lm
LEDs/each optic	1
Light colour	White
Required components:	

CREE

LED	XT-E
FWHM	17.0°
Efficiency	94 %
Peak intensity	6.150 cd/lm
LEDs/each optic	1
Light colour	White
Required components:	

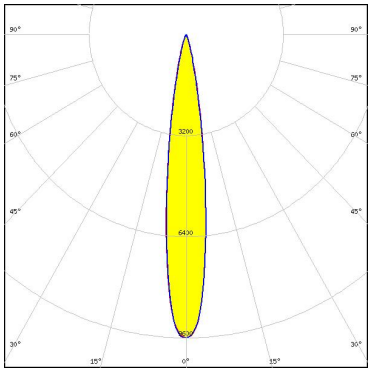

SEOUL SEMICONDUCTOR

LED	Z5
FWHM	12.0°
Efficiency	%
Peak intensity	cd/lm
LEDs/each optic	1
Light colour	White
Required components:	

LEDiL is a registered trademark of LEDiL Oy in the European Union, USA, and certain other countries.

PHOTOMETRIC DATA (MEASURED):

SEOUL SEMICONDUCTOR

LED	Z5M1/Z5M2
FWHM	16.0°
Efficiency	94 %
Peak intensity	7.400 cd/lm
LEDs/each optic	1
Light colour	White
Required components:	

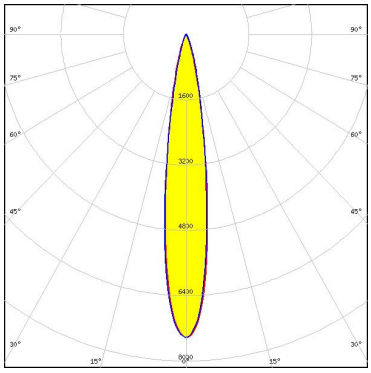

TOSHIBA
Leading Innovation

LED	TL1L4
FWHM	17.0°
Efficiency	94 %
Peak intensity	6.600 cd/lm
LEDs/each optic	1
Light colour	White
Required components:	

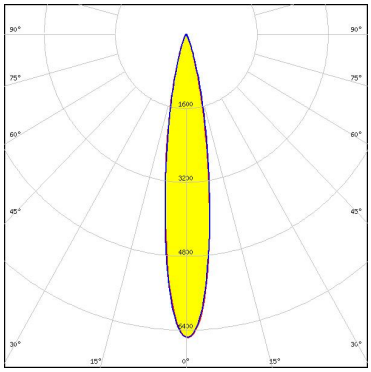

LEDiL is a registered trademark of LEDiL Oy in the European Union, USA, and certain other countries.

GENERAL INFORMATION:

NOTE: The typical beam angle will be changed by different color, chip size and chip position tolerance. The typical total beam angle is the full angle measured where the luminous intensity is half of the peak value.

MATERIALS:

As part of our continuous research and improvement processes, and to ensure the best possible quality and availability of our products, LEDiL reserves the right to change material grades without notice.

PRODUCT DATA USER AGREEMENT AND DISCLAIMER:

The measured data in the provided downloadable LEDiL Product Datasheets and Mechanical 2D-Drawings is rounded and provided as reference for planning. LEDiL Oy's optical specifications have been verified by conducting performance testing of the products in accordance with the company's quality system. The reported data are averaged results of multiple measurements with typical variation. LEDiL Oy reserves the right to without prior notification make changes and improvements to its products.

LEDiL Oy assumes neither warranty, nor guarantee nor any other liability of any kind for the contents and correctness of the provided data. The provided data has been generated with highest diligence but the provided data may in reality not represent the complete possible variation range of all intrinsic parameters. Therefore, in certain cases a deviation from the provided data could occur.

LEDiL Oy reserves the right to undertake technical changes of its products without further notification which could lead to changes in the provided data. LEDiL Oy assumes no liability of any kind for the possible deviation from any provided data or any other damage resulting from the usage of the provided data.

The user agrees to this disclaimer and user agreement with the download or usage of the provided files.

LEDiL Oy
Joensuunkatu 13
FI-24240 SALO
Finland

LEDiL Inc.
228 West Page Street
Suite D
Sycamore IL 60178
USA

Local sales and technical support
www.ledil.com/
where_to_buy

Shipping locations
Salo, Finland
Hong Kong, China

Distribution Partners
www.ledil.com/
where_to_buy

LEDiL is a registered trademark of LEDiL Oy in the European Union, USA, and certain other countries.