RAYSTAR
曜凌光電股份有限公司
住址: 42878 台中市大雅区科雅路 25 號 5F WEB: http://www.Raystar-Optronics.com
5F., No.25, Keya Rd., Daya Dist., Taichung City 428, Taiwan E-mail: sales@raystar-optronics.com
Tel:886-4-2565-0761 Fax：886-4-2565-0760

RFE430W-AWH-DNN

SPECIFICATION

CUSTOMER:

APPROVED BY	
PCB VERSION	
DATE	

FOR CUSTOMER USE ONLY

SALES BY	APPROVED BY	CHECKED BY	PREPARED BY

Release DATE:

TFT Display Inspection Specification: https://www.raystar-optronics.com/download/products.htm

Precaution in use of TFT module: https://www.raystar-optronics.com/download/declaration.htm

sales@prom-elec.com / ООО ПРОМЭЛЕКТРОНИКА

Revision History

VERSION	DATE	REVISED PAGE NO.	Note
0	2019/08/27		First issue

RAYSTAR OPTRONICS

Contents

1.Module Classification Information

2.Summary

3.General Specification

4.Interface

5.Contour Drawing

6.Block Diagram

7.Absolute Maximum Ratings

8.Electrical Characteristics

9.AC Characteristics

10. Waveform

11.Optical Characteristics

12.Reliability

13.Other

RAYSTAR OPTRONICS

1.Module Classification Information

R	F	E	43	0W	-	A	W	H	-	D	N	N
1	2	3	4	5	-	6	7	8	-	9	10	11

Item	Description	
1	R：Raystar Optronics Inc.	
2	Display Type：F→TFT Type, J→ Custom TFT	
3	Solution: A: 128x160 B:320x234 C:320x240 D:480x234 E:480x272 F:800x480 G:640x480 H:1024x600 I:320x480 J:240x320 K:1280x800 L:240x400 M:1024x768 N:128x128 O:480x800 P:640x320 Q:800x600 S:480x128 T:800x320	
4	Display Size：4.3” TFT	
5	Version Code.	
6	Model Type: A：TFT LCD E：TFT+FR+CONTROL BOARD J：TFT+FR+A/D BOARD N：TFT+FR+A/D BOARD+CONTROL BOARD S：TFT+FR+POWER BOARD (DC TO DC) 1：TFT+CONTROL BOARD	6：TFT+FR H：TFT+D/V BOARD I：TFT+FR+D/V BOARD B：TFT+POWER BD
7	Polarizer Type, Temperature range, View direction	I→Transmissive, W. T, 6:00 ; C→Transmissive, N. T, 6:00 L→Transmissive, W.T,12:00 ; F→Transmissive, N.T,12:00 Y→Transmissive,W.T, IPS TFT ; A→Transmissive, N.T, IPS TFT Z→Transmissive, W.T, O-TFT R→Transmissive, Super W.T, O-TFT N→Transmissive, Super W.T, 6:00; Q→Transmissive, Super W.T, 12:00 V→Transmissive, Super W.T, VA TFT
8	Backlight	W：LED, White / H：LED, High Light White F：CCFL, White
9	Driver Method	D: Digital A: Analog L：LVDS M:MIPI
10	Interface	N：without control board A：8Bit B：16Bit S:SPI Interface R: RS232 U:USB I: I2C
11	TS	N：Without TS S：resistive touch panel C：capacitive touch panel capacitive touch panel (G-F-F) G：capacitive touch panel(G-G)

RAYSTAR OPTRONICS

2.Summary

TFT 4.3” is a IPS transmissive type color active matrix TFT liquid crystal display that use amorphous silicon TFT as switching devices. This module is a composed of a TFT_LCD module, It is usually designed for industrial application and this module follows RoHs,

RAYSTAR OPTRONICS

3.General Specifications

- Size: 4.3 inch
- Dot Matrix: 480 x RGBx272(TFT) dots
- Module dimension: 105.5(W) x 67.2(H) x 2.95(D) mm
- Active area: 95.04 x 53.856 mm
- Dot pitch: 0.066 x 0.198 mm
- LCD type: TFT, Normally Black, Transmissive
- Viewing Angle: 80/80/80/80
- Aspect Ratio: 16:9
- TFT Driver IC: SC7283 or equivalent
- Interface: 24-bit RGB
- Backlight Type: LED,Normally White
- With /Without TP: Without TP
- Surface: Glare

*Color tone slight changed by temperature and driving voltage.

RAYSTAR OPTRONICS

4.Interface

4.1. LCM PIN Definition

Pin	Symbol	Function	Remark
1	LED-	Power for LED backlight cathode	
2	LED+	Power for LED backlight anode	
3	GND	Power ground	
4	VCC	Power voltage	
5	R0	Red data	
6	R1	Red data	
7	R2	Red data	
8	R3	Red data	
9	R4	Red data	
10	R5	Red data	
11	R6	Red data	
12	R7	Red data	
13	G0	Green data	
14	G1	Green data	
15	G2	Green data	
16	G3	Green data	
17	G4	Green data	
18	G5	Green data	
19	G6	Green data	
20	G7	Green data	
21	B0	Blue data	
22	B1	Blue data	
23	B2	Blue data	
24	B3	Blue data	
25	B4	Blue data	
26	B5	Blue data	
27	B6	Blue data	
28	B7	Blue data	
29	GND	Power ground	

RAYSTAR OPTRONICS

<table>
<tr><td>30</td><td>CLK</td><td>Pixel clock input pin</td><td></td></tr>
<tr><td>31</td><td>DISP</td><td>DISP sets the display mode.
<table>
<tr><th>VDLKPOL</th><th>Function Description</th></tr>
<tr><td>L</td><td>VSYNC polarity: positive</td></tr>
<tr><td>H</td><td>YSNC polarity: negative</td></tr>
</table></td><td></td></tr>
<tr><td>32</td><td>HSYNC</td><td>Horizontal sync signal, default is negative polarity.</td><td></td></tr>
<tr><td>33</td><td>VSYNC</td><td>Vertical sync signal, default is negative polarity.</td><td></td></tr>
<tr><td>34</td><td>DE</td><td>Data input enable.</td><td></td></tr>
<tr><td>35</td><td>NC</td><td>No connection</td><td></td></tr>
<tr><td>36</td><td>GND</td><td>Power ground</td><td></td></tr>
<tr><td>37</td><td>NC</td><td>No connection</td><td></td></tr>
<tr><td>38</td><td>NC</td><td>No connection</td><td></td></tr>
<tr><td>39</td><td>NC</td><td>No connection</td><td></td></tr>
<tr><td>40</td><td>NC</td><td>No connection</td><td></td></tr>
</table>

RAYSTAR OPTRONICS

5.Contour Drawing

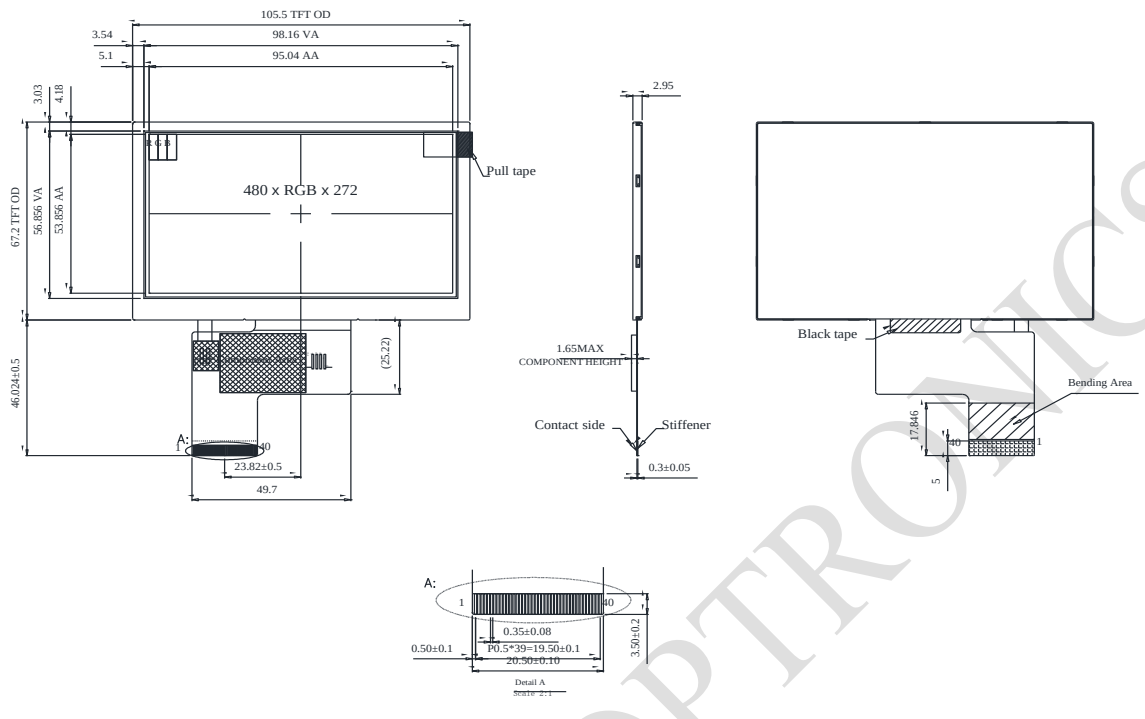

PIN NO.	SYMBOL
1	LED-
2	LED+
3	GND
4	VCC
5	R0
6	R1
7	R2
8	R3
9	R4
10	R5
11	R6
12	R7
13	G0
14	G1
15	G2
16	G3
17	G4
18	G5
19	G6
20	G7
21	B0
22	B1
23	B2
24	B3
25	B4
26	B5
27	B6
28	B7
29	GND
30	CLK
31	DISP
32	HSYNC
33	VSYNC
34	DE
35	NC
36	GND
37	NC
38	NC
39	NC
40	NC

The non-specified tolerance of dimension is ±0.3 mm .

RAYSTAR OPTRONICS

6.Block Diagram

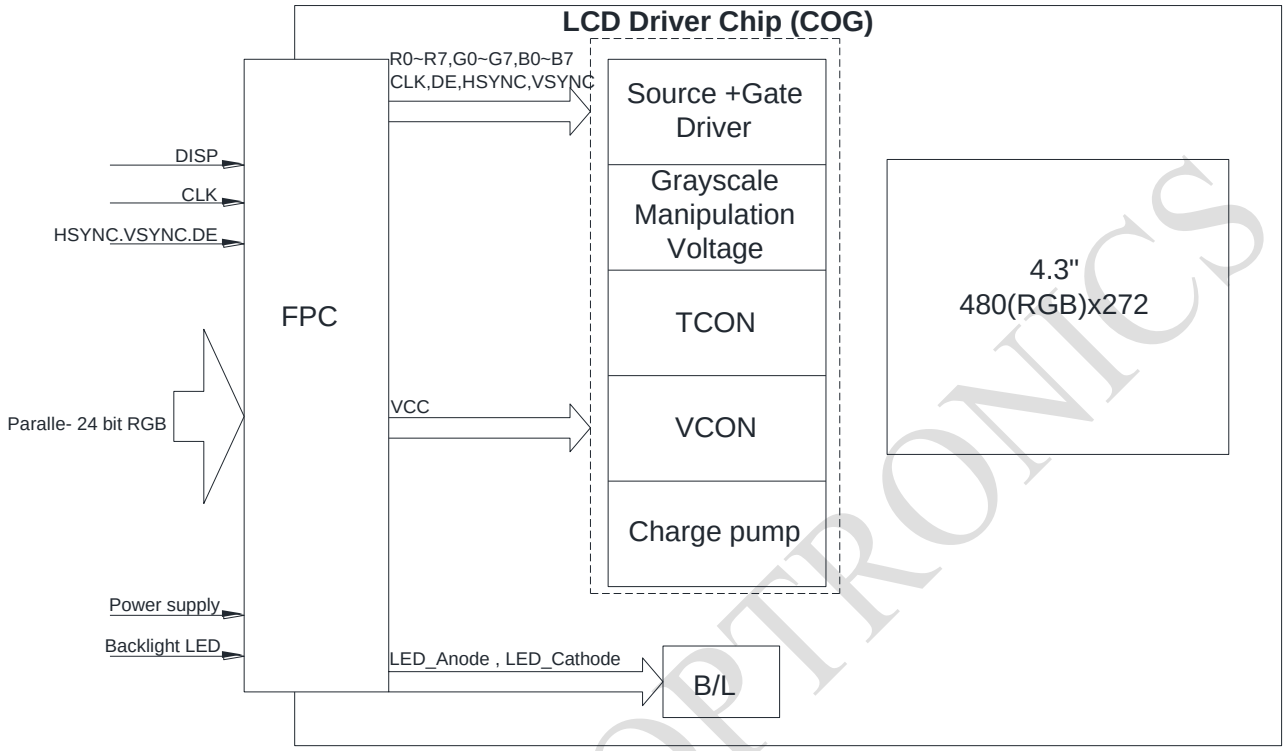

RAYSTAR OPTRONICS

7.Absolute Maximum Ratings

Item	Symbol	Min	Typ	Max	Unit
Operating Temperature	TOP	-30	—	+80	℃
Storage Temperature	TST	-30	—	+80	℃

Note: Device is subject to be damaged permanently if stresses beyond those absolute maximum ratings listed above

1. Temp. ≦60℃, 90% RH MAX. Temp.＞60℃, Absolute humidity shall be less than 90% RH at 60℃

RAYSTAR OPTRONICS

8.Electrical Characteristics

8.1. Operating conditions:

Item	Symbol	Min	Typ	Max	Unit	Remark
Supply Voltage For LCM	VCC	3.0	-	3.6	V	
Supply Current For LCM	ICC	-	25	37.5	mA	Note1

Note 1 : This value is test for VDD=3.3V , Ta=25 ℃ only

8.2. LED driving conditions

Parameter	Symbol	Min.	Typ.	Max.	Unit	Remark
LED current	-	-	40	-	mA	-
Power Consumption	-	864	1024	1088	mW	-
LED voltage	VLED+	21.6	25.6	27.2	V	Note 1
LED Life Time	-	-	50,000	-	Hr	Note 2,3,4

Note 1 : There are 1 Groups LED

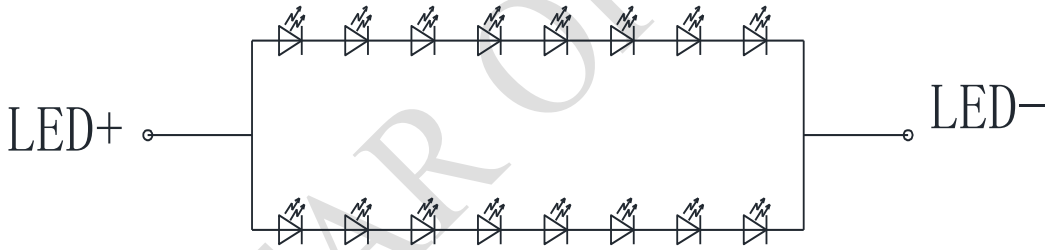

CIRCUIT DIAGRAM(8*2)

Note 2 : Ta = 25 ℃
Note 3 : Brightness to be decreased to 50% of the initial value
Note 4 : The single LED lamp case

RAYSTAR OPTRONICS

9.AC CHARATERISTICS

AC Electrical Characteristics (PVDD=VDD=VDDI= 3.3V, AGND= 0V, TA=25 C, Bare Chip)

9.1. System Operation AC Characteristics

Item	Symbol	Min.	Typ.	Max.	Unit	Conditions
VDD Power Source Slew Time	TPOR	-	-	20	ms	From 0V to 99% VDD
GRB Pulse Width	tRSTW	10	50	-	us	R=10Kohm, C=1uF
SD Output Stable Time	Tst	-	-	12	us	Output settled within +20mV Loading = 6.8k+28.2pF.
GD Output Rise and Fall Time	Tgst	-	-	6	us	Output settled (5%~95%), Loading = 4.7k+29.8pF

9.2. System Bus Timing for I2C Interface

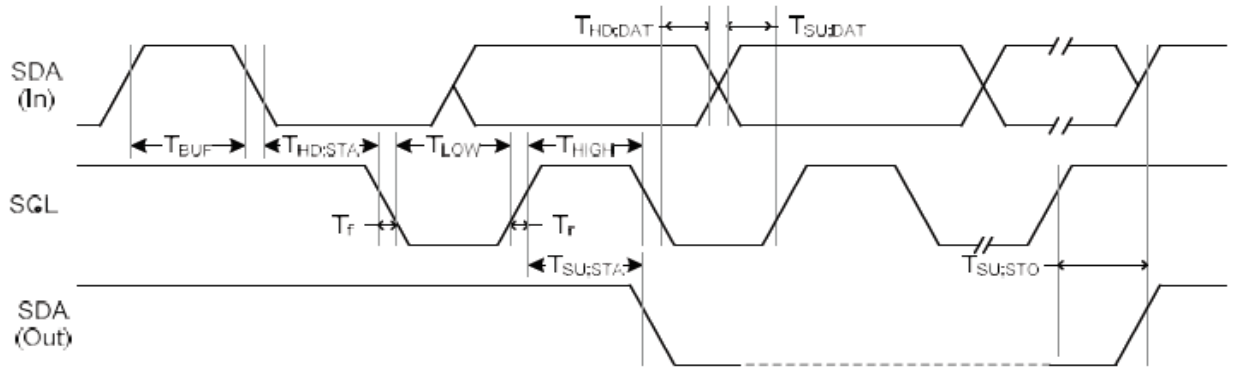

Item	Symbol	Min.	Typ.	Max.	Unit	Conditions
SCL Clock Frequency	FSCL	-	-	400	KHz	
SCL Clock Low Period	TLOW	1300	-	-	ns	
SCL Clock High Period	THIGH	600	-	-	ns	
Signal Rise Time	Tr	20+0.1Cb	-	300	ns	
Signal Fall Time	Tf	20+0.1Cb	-	300	ns	
Start Condition Setup Time	TSU;STA	600	-	-	ns	
Start Condition Hold Time	THD;STA	600	-	-	ns	
Data Setup Time	TSU;DAT	100	-	-	ns	
Data Hold Time	THD;DAT	0	-	900	ns	
Setup Time for STOP Condition	TSU;STO	600	-	-	ns	
Bus Free Time Between a STOP and START	TBUF	100	-	-	ns	
Capacitive load represented by each bus line		Cb		400	pF	
Tolerable Spike Width on Bus	TSW	-	-	50	ns	

9.3. System Bus Timing for 3-Wire SPI Interface

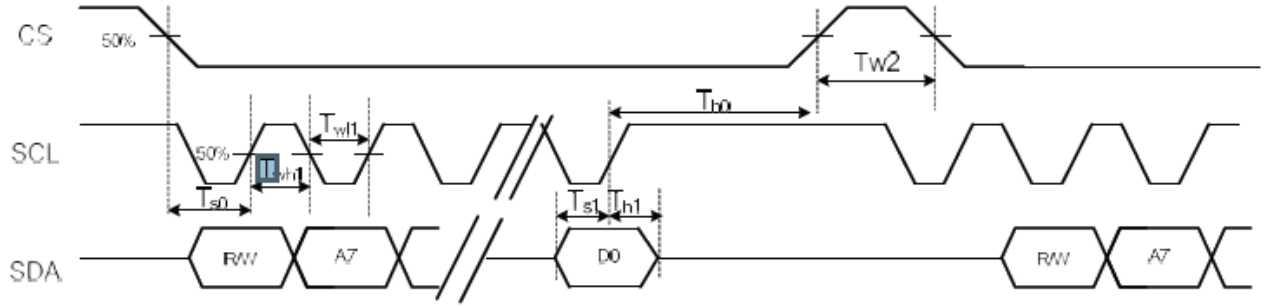

Item	Symbol	Min.	Typ.	Max.	Unit	Conditions
CS Input Setup Time	Ts0	50	-	-	ns	
Serial Data Input Setup Time	Ts1	50	-	-	ns	
CS Input Hold Time	Th0	50	-	-	ns	
Serial Data Input Hold Time	Th1	50	-	-	ns	
SCL Write Pulse High Width	Twh1	50	-	-	ns	
SCL Write Pulse Low Width	Twl1	50	-	-	ns	
SCL Read Pulse High Width	Trh1	300	-	-	ns	
SCL Read Pulse Low Width	Trl1	300	-	-	ns	
CS Pulse High Width	Tw2	400	-	-	ns	

RAYSTAR C

9.4. System Bus Timing for RGB Interface

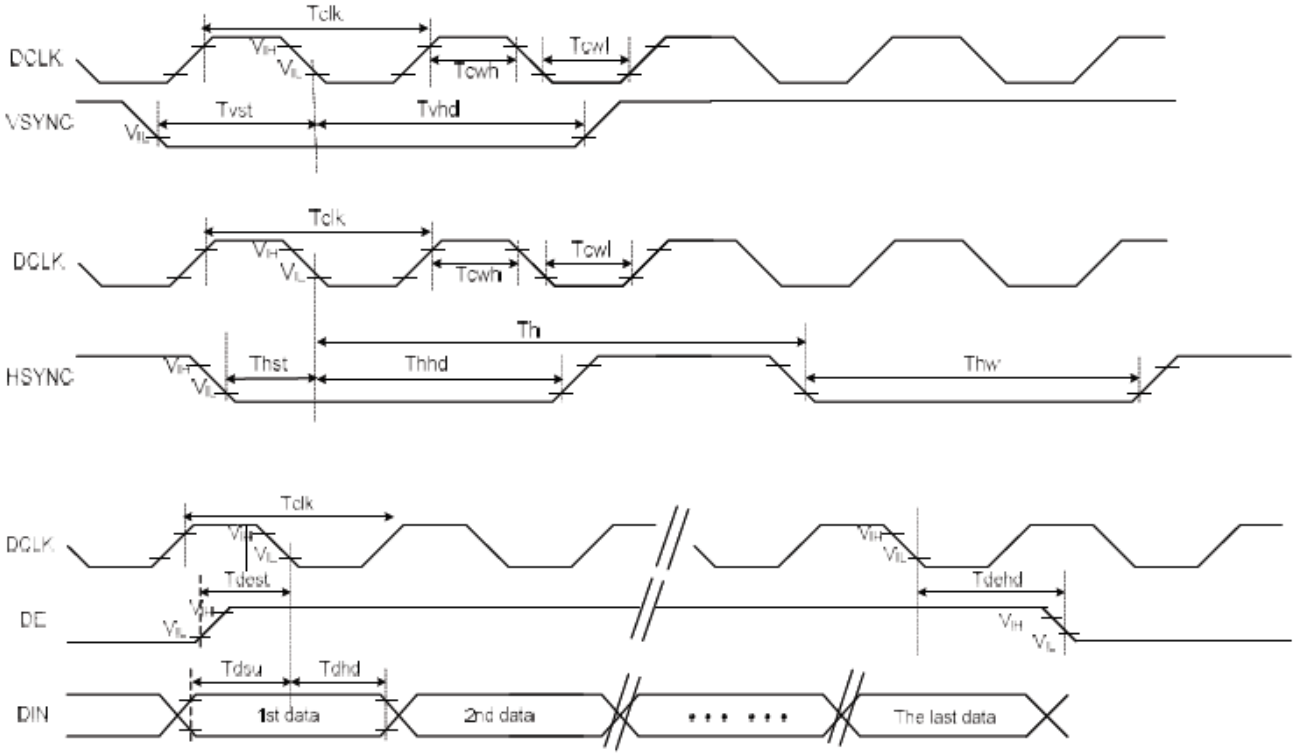

Item	Symbol	Min.	Typ.	Max.	Unit	Conditions
CLK Pulse Duty	Tcw	40	50	60	%	
HSYNC Width	Thw	2	-	-	DCLK	
HSYNC Period	Th	55	60	65	us	
VSYNC Setup Time	Tvst	12	-	-	ns	
VSYNC Hold Time	Tvhd	12	-	-	ns	
HSYNC Setup Time	Thst	12	-	-	ns	
HSYNC Hold Time	Thhd	12	-	-	ns	
Data Setup Time	Tdsu	12	-	-	ns	
Data Hold Time	Tdhd	12	-	-	ns	
DE Setup Time	Tdest	12	-	-	ns	
DE Hold Time	Tdehd	12	-	-	ns	

10.Power sequence& Reset

10.1. Power On Sequence

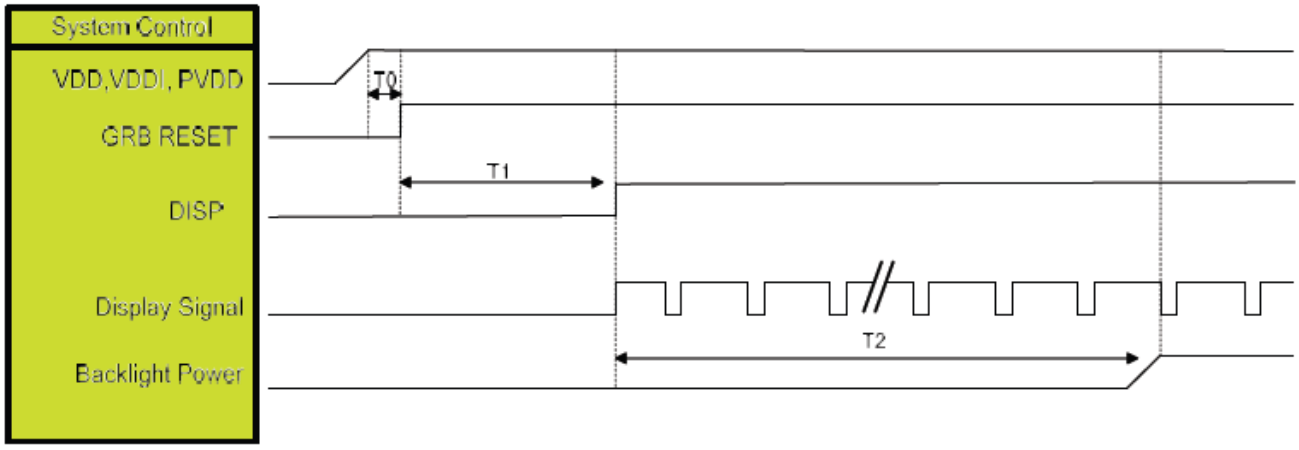

Symbol	Description	Min. Time	Unit
T0	System power stability to GRB RESET signal	0	ms
T1	GRB RESET= "High" to DISP="High"	10	ms
T2	Display Signal output to Backlight Power on	250	ms

10.2. Power Off Sequence

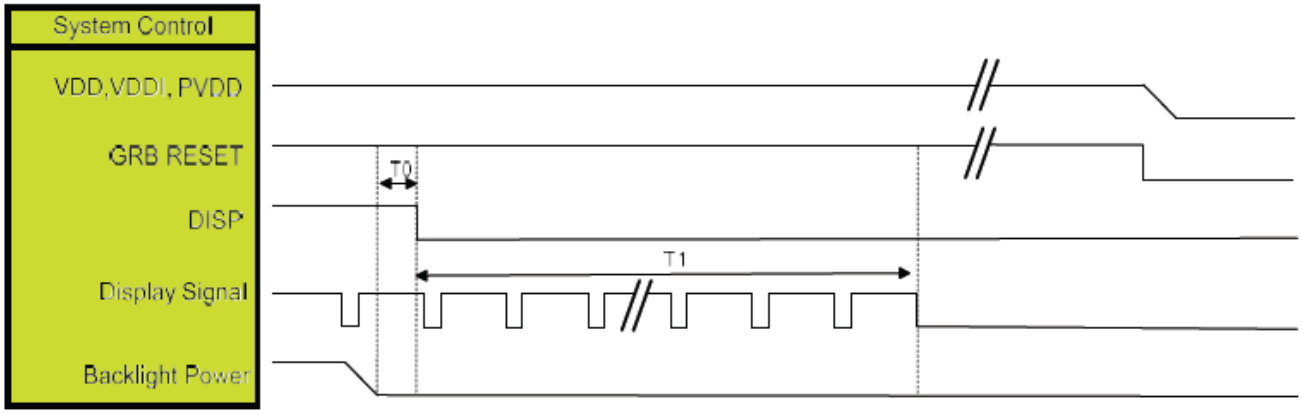

Symbol	Description	Min. Time	Unit
T0	Backlight Power off to DISP="Low"	5	ms
T1	DISP="Low" to IC internal voltage discharge complete	80	ms

11.Optical Characteristics

Item		Symbol	Condition.	Min	Typ.	Max.	Unit	Remark
Response time		Tr+ Tf	θ=0°、Φ=0°	-	30	40	ms	Note 3
Contrast ratio		CR	At optimized viewing angle	640	800	-	-	Note 4
Color Chromaticity	White	Wx	θ=0°、Φ=0	0.27	0.32	0.37	-	Note 2,6,7
		Wy		0.295	0.345	0.395	-	
Viewing angle	Hor.	ΘR	CR≧10	70	80	-	Deg.	Note 1
		ΘL		70	80	-		
	Ver.	ΦT		70	80	-		
		ΦB		70	80	-		
Brightness		-	-	850	1000	-	cd/m²	Center of display
Uniformity		(U)	-	75	-	-	%	Note 5

Ta=25±2℃, IL=40mA

Note 1: Definition of viewing angle range

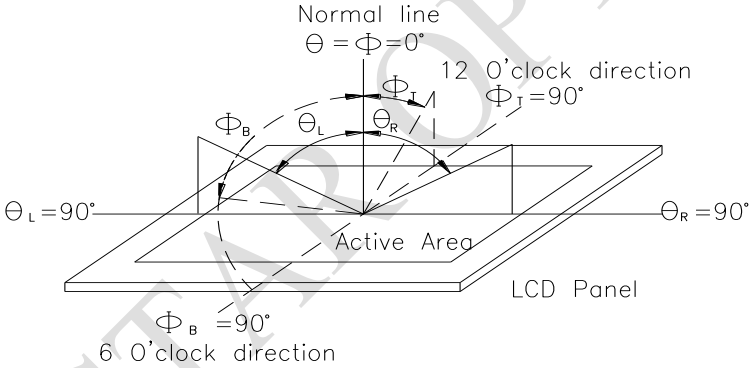

Fig. 11.1. Definition of viewing angle

Note 2: Test equipment setup:

After stabilizing and leaving the panel alone at a driven temperature for 10 minutes, the measurement should be executed. Measurement should be executed in a stable, windless, and dark room. Optical specifications are measured by Topcon BM-7orBM-5 luminance meter 1.0° field of view at a distance of 50cm and normal direction.

RAYSTAR OPTRONICS

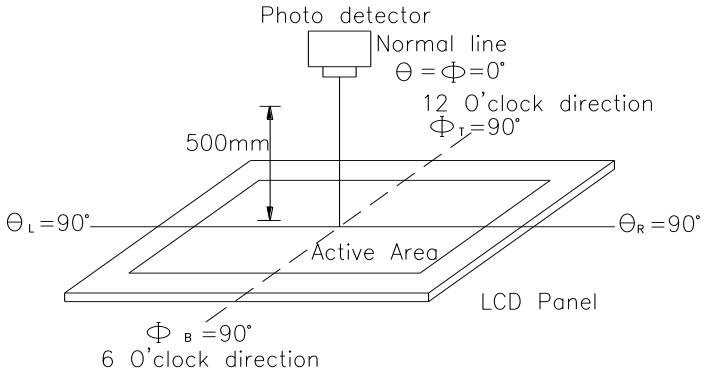

Fig. 11.2. Optical measurement system setup

Note 3: Definition of Response time:
The response time is defined as the LCD optical switching time interval between “White” state and “Black” state. Rise time, Tr, is the time between photo detector output intensity changed from 90%to 10%. And fall time, Tf, is the time between photo detector output intensity changed from 10%to 90%

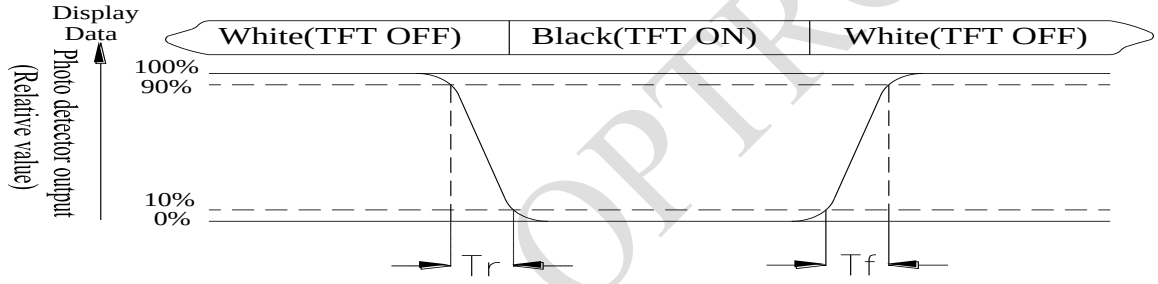

Note 4: Definition of contrast ratio:
The contrast ratio is defined as the following expression.

$$\text{Contrast ratio (CR)} = \frac{\text{Luminance measured when LCD on the "White" state}}{\text{Luminance measured when LCD on the "Black" state}}$$

RAYSTAR OPTRONICS

Note 5: Definition of Luminance Uniformity
Active area is divided into 9 measuring areas (reference the picture in below). Every measuring point is placed at the center of each measuring area.
Luminance Uniformity (U) = Lmin/Lmax x100%
L = Active area length
W = Active area width

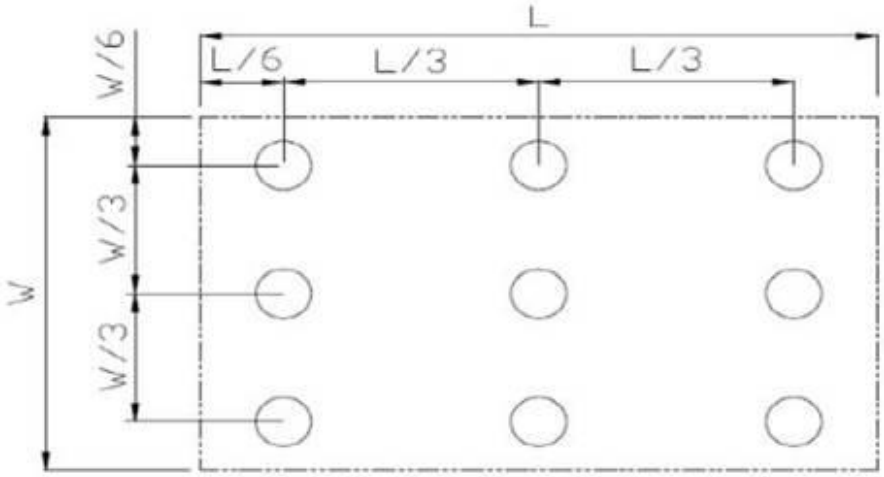

Fig 11.3. Definition of uniformity

Note 6: Definition of color chromaticity (CIE 1931)
Color coordinates measured at the center point of LCD

Note 7: Measured at the center area of the panel when all the input terminals of LCD panel are electrically opened.

RAYSTAR OPTRONICS

12.Reliability

Content of Reliability Test (Super Wide temperature, -30℃~80℃)

Environmental Test			
Test Item	**Content of Test**	**Test Condition**	**Note**
High Temperature storage	Endurance test applying the high storage temperature for a long time.	80℃ 200hrs	2
Low Temperature storage	Endurance test applying the low storage temperature for a long time.	-30℃ 200hrs	1,2
High Temperature Operation	Endurance test applying the electric stress (Voltage & Current) and the thermal stress to the element for a long time.	80℃ 200hrs	——
Low Temperature Operation	Endurance test applying the electric stress under low temperature for a long time.	-30℃ 200hrs	1
High Temperature/ Humidity storage	The module should be allowed to stand at 60℃,90%RH max	60℃,90%RH 96hrs	1,2
Thermal shock resistance	The sample should be allowed stand the following 10 cycles of operation -30℃ 25℃ 80℃ 30min 5min 30min 1 cycle	-30℃/80℃ 10 cycles	——
Vibration test	Endurance test applying the vibration during transportation and using.	Total fixed amplitude : 1.5mm Vibration Frequency : 10~55Hz One cycle 60 seconds to 3 directions of X,Y,Z for Each 15 minutes	**3**
Static electricity test	Endurance test applying the electric stress to the terminal.	VS=±600V(contact) ,±800v(air), RS=330Ω CS=150pF 10 times	——

Note1: No dew condensation to be observed.
Note2: The function test shall be conducted after 4 hours storage at the normal Temperature and humidity after remove from the test chamber.
Note3: The packing have to including into the vibration testing.

RAYSTAR OPTRONICS

Page: 1

LCM Sample Estimate Feedback Sheet		
Module Number： _____		
1、Panel Specification：		
1. Panel Type：	□ Pass	□ NG ,_____
2. View Direction：	□ Pass	□ NG ,_____
3. Numbers of Dots：	□ Pass	□ NG ,_____
4. View Area：	□ Pass	□ NG ,_____
5. Active Area：	□ Pass	□ NG ,_____
6.Operating Temperature：	□ Pass	□ NG ,_____
7.Storage Temperature：	□ Pass	□ NG ,_____
8.Others：_____		
2、Mechanical Specification：		
1. PCB Size：	□ Pass	□ NG ,_____
2.Frame Size：	□ Pass	□ NG ,_____
3.Materal of Frame：	□ Pass	□ NG ,_____
4.Connector Position：	□ Pass	□ NG ,_____
5.Fix Hole Position：	□ Pass	□ NG ,_____
6.Backlight Position：	□ Pass	□ NG ,_____
7. Thickness of PCB：	□ Pass	□ NG ,_____
8. Height of Frame to PCB：	□ Pass	□ NG ,_____
9.Height of Module：	□ Pass	□ NG ,_____
10.Others：	□ Pass	□ NG ,_____
3、Relative Hole Size：		
1.Pitch of Connector：	□ Pass	□ NG ,_____
2.Hole size of Connector：	□ Pass	□ NG ,_____
3.Mounting Hole size：	□ Pass	□ NG ,_____
4.Mounting Hole Type：	□ Pass	□ NG ,_____
5.Others：	□ Pass	□ NG ,_____
4、Backlight Specification：		
1.B/L Type：	□ Pass	□ NG ,_____
2.B/L Color：	□ Pass	□ NG ,_____
3.B/L Driving Voltage (Reference for LED Type)：□ Pass □ NG ,_____		
4.B/L Driving Current：	□ Pass	□ NG ,_____
5.Brightness of B/L：	□ Pass	□ NG ,_____
6.B/L Solder Method：	□ Pass	□ NG ,_____
7.Others：	□ Pass	□ NG ,_____

>> **Go to page 2** <<

RAYSTAR OPTRONICS

Module Number：_____

5、Electronic Characteristics of Module：

1.Input Voltage：	□ Pass	□ NG ,_____
2.Supply Current：	□ Pass	□ NG ,_____
3.Driving Voltage for LCD：	□ Pass	□ NG ,_____
4.Contrast for LCD：	□ Pass	□ NG ,_____
5.B/L Driving Method：	□ Pass	□ NG ,_____
6.Negative Voltage Output：	□ Pass	□ NG ,_____
7.Interface Function：	□ Pass	□ NG ,_____
8.LCD Uniformity：	□ Pass	□ NG ,_____
9.ESD test：	□ Pass	□ NG ,_____
10.Others：	□ Pass	□ NG ,_____

6、Summary：

Sales signature：_____

Customer Signature：_____ **Date**： / /

RAYSTAR OPTRONICS