Test plug mounting
PSA-F11,6
Item 18199

GO TO PRODUCT

ingun®
Partner for Future Technology

General data

Product group	Test plug mountings (PSA)
Series	PS-PSA
Sub-series	PSA-F11,6 flexible version
Press ring	No
Surface area	unveredelt
Knurl	No
Vacuum-tight	No
RoHS-compliant	RoHS-3

Mounting hole

Mounting hole in CEM1	4.00 mm [.157 in]
Mounting hole in FR4	4.00 mm [.157 in]

Mechanical data

Total length	32.5 mm [1.27 in]

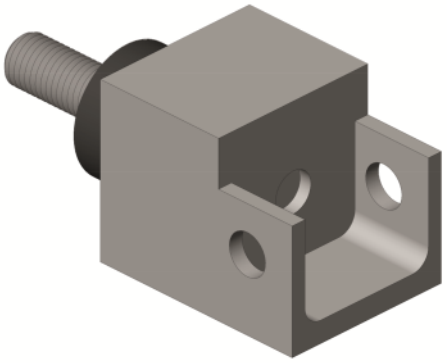

RECEPTACLES

Test plug mounting
PSA-F11,6
Item 18199

GO TO PRODUCT

ingun®
Partner for Future Technology

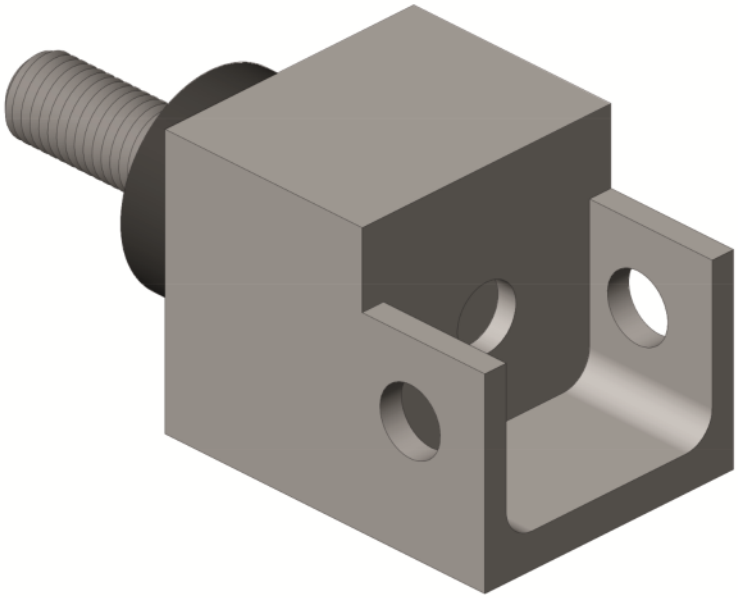

INGUN Prüfmittelbau GmbH
Max-Stromeyer-Straße 162
78467, Constance, Germany
Phone +49 7531 8105-0
Customer hotline +49 7531 8105-888
Fax +49 7531 8105-65
info@ingun.com

Prices and delivery times on request.
Technical changes reserved. 12/23 EN

Learn more about
Test probes

ingun.com

RECEPTACLES