LFXX

Very low drop voltage regulator with inhibit function

Datasheet - production data

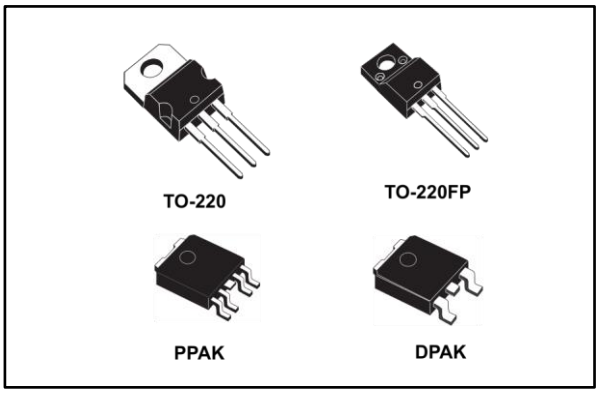

Features

- Very low-dropout voltage (0.45 V)
- Very low quiescent current (typ. 50 µA in OFF mode, 500 µA in ON mode)
- Output current up to 500 mA
- Logic-controlled electronic shutdown
- Output voltages of 1.5; 1.8; 2.5; 3.3; 4.7; 5; 6; 8; 8.5; 9; 12 V
- Automotive grade product: 1.8 V, 2.5 V, 3.3 V, 5.0 V, 8.0 V, 8.5 V V_{OUT} in DPAK and PPAK packages
- Internal current and thermal limit
- Only 2.2 µF for stability
- Available in ±1% (AB), ±1.5% (AC) or ±2% (C) selection at 25 °C
- Supply voltage rejection: 80 db (typ.)
- Temperature range: from -40 to 125 °C

Description

The LFXX is a very low drop regulator available in TO-220, TO-220FP, DPAK and PPAK packages and in a wide range of output voltages. The low drop voltage (0.45 V) and low quiescent current make it particularly suitable for low-noise, low-power applications and especially in battery-powered systems. In the 5 pin configuration (PPAK) a shutdown logic control function is available (pin 2, TTL compatible). This means that when the device is used as a local regulator, a part of the board can be put in standby, decreasing the total power consumption. In the three terminal configuration, the device has the same electrical performance, but it is fixed in ON state. It requires a capacitor of only 2.2 µF for stability, saving board space and costs. The LFXX is available as automotive grade in DPAK and PPAK packages, for the options of output voltages whose commercial part numbers are shown in the order codes. These devices are qualified according to the specification AEC-Q100 of the automotive market, in the temperature range -40 °C to 125 °C, and the statistical tests PAT, SYL, SBL are performed.

This is information on a product in full production. www.st.com

sales@prom-elec.com / ООО ПРОМЭЛЕКТРОНИКА

Contents

1 Diagram 3

2 Pin configuration 4

3 Maximum ratings 5

4 Electrical characteristics 6

5 Typical performance characteristics 33

6 Package information 38

6.1 TO-220 (dual gauge) package information 38

6.2 TO-220 (single gauge) package information 40

6.3 TO-220FP package information 42

6.4 TO-220 packing information 44

6.5 DPAK package information 45

6.6 PPAK package information 47

6.7 PPAK and DPAK packing information 49

7 Ordering information 51

8 Revision history 52

1 Diagram

Figure 1: Block diagram

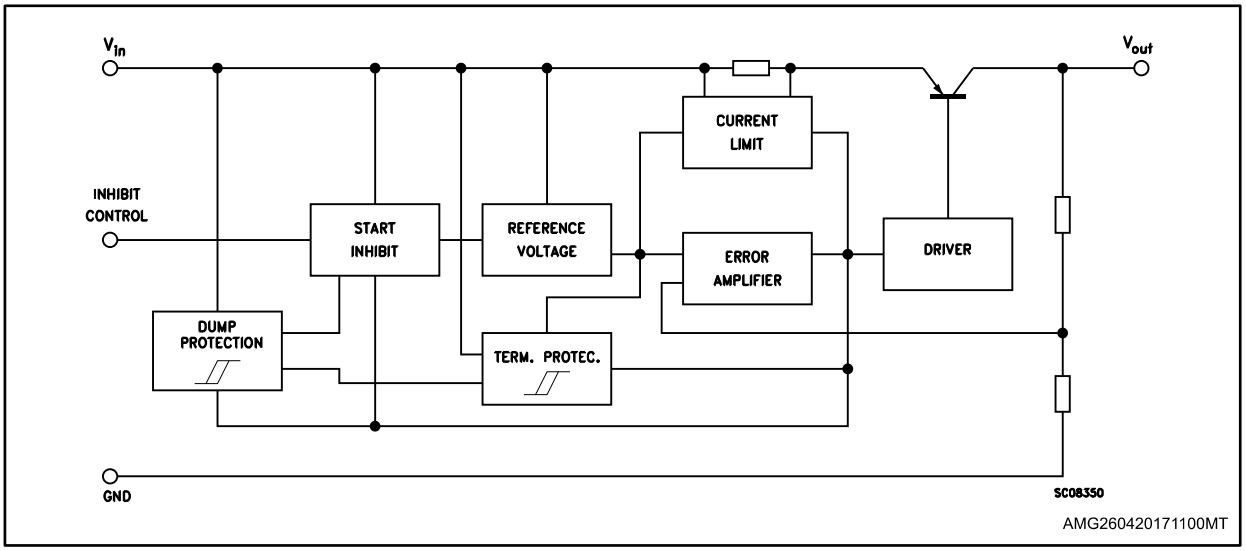

2 Pin configuration

Figure 2: Pin connections (top view)

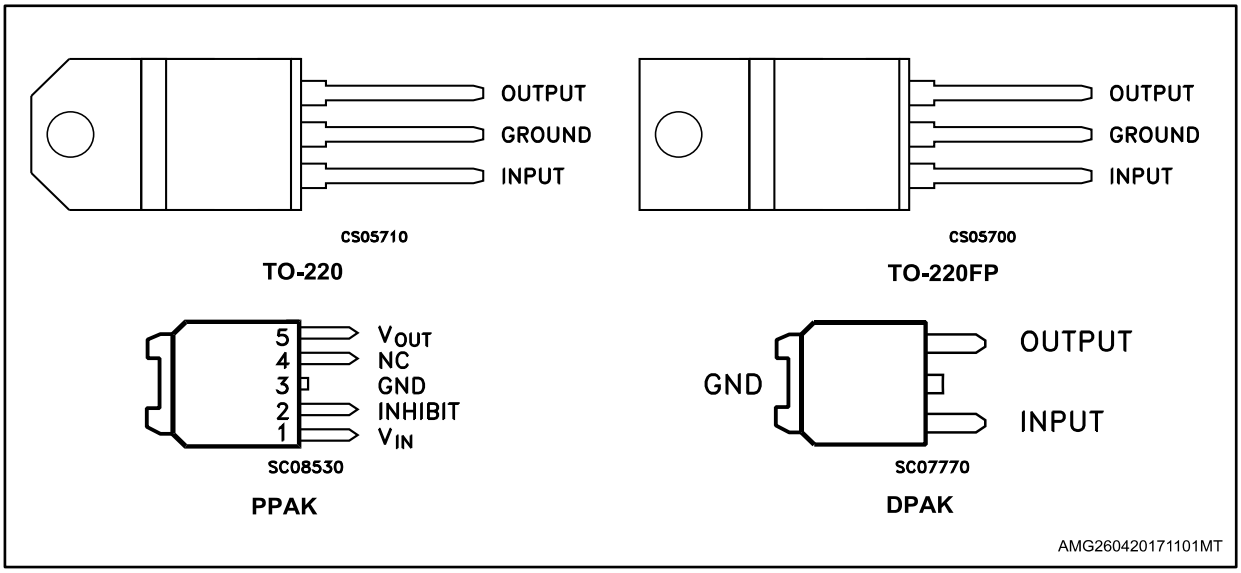

TAB is electrically connected to GND on TO-220, PPAK and DPAK packages.

3 Maximum ratings

Table 1: Absolute maximum ratings

Symbol	Parameter	Value	Unit
V_I	DC input voltage	-0.5 to 40[(1)]	V
I_O	Output current	Internally limited	A
P_{TOT}	Power dissipation	Internally limited	W
T_{STG}	Storage temperature range	-40 to 150	°C
T_{OP}	Operating junction temperature range	-40 to 125	°C

Notes:

(1)For 18 < V_I < 40 the regulator is in shutdown.

Table 2: Thermal data

Symbol	Parameter	TO-220	TO-220FP	DPAK/PPAK	Unit
R_{thJC}	Thermal resistance junction-case	5	5	8	°C/W
R_{thJA}	Thermal resistance junction-ambient	50	60	100	°C/W

Figure 3: Test circuit

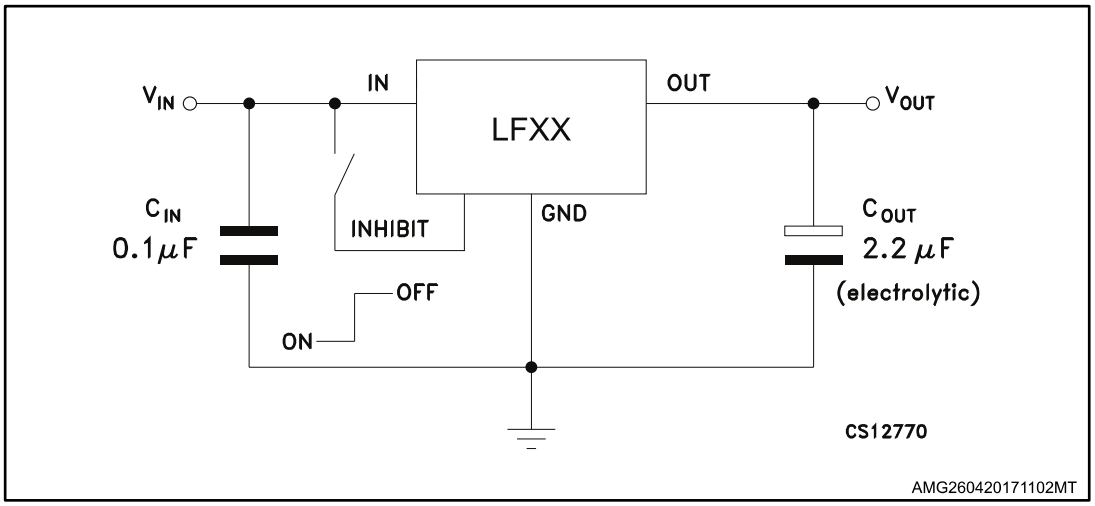

4 Electrical characteristics

Refer to test circuits, T_J = 25 °C, C_I = 0.1 µF, C_O = 2.2 µF unless otherwise specified.

Table 3: LF15AB electrical characteristics

Symbol	Parameter	Test condition		Min.	Typ.	Max.	Unit
V_O	Output voltage	I_O = 50 mA V_I = 3.5 V		1.485	1.5	1.515	V
		I_O = 50 mA V_I = 3.5 V T_a = -25 to 85 °C		1.470		1.530	
V_I	Operating input voltage	I_O = 500 mA		2.5		16	V
I_O	Output current limit				1		A
ΔV_O	Line regulation	V_I = 2.5 to 16 V I_O = 5 mA			2	10	mV
ΔV_O	Load regulation	V_I = 2.8 V I_O = 5 to 500 mA			2	10	mV
I_d	Quiescent current	V_I = 2.5 to 16 V I_O = 0 mA	ON mode		0.5	1	mA
		V_I = 2.8 to 16 V I_O = 500 mA				12	
		V_I = 6 V	OFF mode		50	100	µA
SVR	Supply voltage rejection	I_O = 5 mA V_I = 3.5 ± 1 V	f = 120 Hz		82		dB
			f = 1 kHz		77		
			f = 10 kHz		65		
eN	Output noise voltage	B = 10 Hz to 100 kHz			50		µV
V_d	Dropout voltage	I_O = 200 mA			1		V
V_{IL}	Control input logic low	T_a = -40 to 125 °C				0.8	V
V_{IH}	Control input logic high	T_a = -40 to 125 °C		2			V
I_I	Control input current	V_I = 6 V V_C = 6 V			10		µA
C_O	Output bypass capacitance	ESR = 0.1 to 10 Ω I_O = 0 to 500 mA		2	10		µF

Refer to test circuits, T_J = 25 °C, C_I = 0.1 µF, C_O = 2.2 µF unless otherwise specified.

Table 4: LF18AB electrical characteristics

Symbol	Parameter	Test condition		Min.	Typ.	Max.	Unit
V_O	Output voltage	I_O = 50 mA V_I = 3.3 V		1.782	1.8	1.818	V
		I_O = 50 mA V_I = 3.3 V T_a = -25 to 85 °C		1.764		1.836	
V_I	Operating input voltage	I_O = 500 mA		3		16	V
I_O	Output current limit				1		A
ΔV_O	Line regulation	V_I = 2.8 to 16 V I_O = 5 mA			2	12	mV
ΔV_O	Load regulation	V_I = 3.3 V I_O = 5 to 500 mA			2	10	mV
I_d	Quiescent current	V_I = 2.5 to 16 V I_O = 0 mA	ON mode		0.5	1	mA
		V_I = 3.1 to 16 V I_O = 500 mA				12	
		V_I = 6 V	OFF mode		50	100	µA
SVR	Supply voltage rejection	I_O = 5 mA V_I = 3.5 ± 1 V	f = 120 Hz		82		dB
			f = 1 kHz		77		
			f = 10 kHz		60		
eN	Output noise voltage	B = 10 Hz to 100 kHz			50		µV
V_d	Dropout voltage	I_O = 200 mA			0.7		V
V_{IL}	Control input logic low	T_a = -40 to 125 °C				0.8	V
V_{IH}	Control input logic high	T_a = -40 to 125 °C		2			V
I_I	Control input current	V_I = 6 V V_C = 6 V			10		µA
C_O	Output bypass capacitance	ESR = 0.1 to 10 Ω I_O = 0 to 500 mA		2	10		µF

Refer to test circuits, T_J = 25 °C, C_I = 0.1 µF, C_O = 2.2 µF unless otherwise specified.

Table 5: LF18C electrical characteristics

Symbol	Parameter	Test condition		Min.	Typ.	Max.	Unit
V_O	Output voltage	I_O = 50 mA V_I = 3.5 V		1.764	1.8	1.836	V
		I_O = 50 mA V_I = 3.5 V T_a = -25 to 85 °C		1.728		1.872	
V_I	Operating input voltage	I_O = 500 mA		3		16	V
I_O	Output current limit				1		A
ΔV_O	Line regulation	V_I = 2.8 to 16 V I_O = 5 mA			2	12	mV
ΔV_O	Load regulation	V_I = 3.3 V I_O = 5 to 500 mA			2	10	mV
I_d	Quiescent current	V_I = 2.5 to 16 V I_O = 0 mA	ON mode		0.5	1	mA
		V_I = 3.1 to 16 V I_O = 500 mA				12	
		V_I = 6 V	OFF mode		50	100	µA
SVR	Supply voltage rejection	I_O = 5 mA V_I = 3.5 ± 1 V	f = 120 Hz		82		dB
			f = 1 kHz		77		
			f = 10 kHz		60		
eN	Output noise voltage	B = 10 Hz to 100 kHz			50		µV
V_d	Dropout voltage	I_O = 200 mA			0.7		V
V_{IL}	Control input logic low	T_a = -40 to 125 °C				0.8	V
V_{IH}	Control input logic high	T_a = -40 to 125 °C		2			V
I_I	Control input current	V_I = 6 V V_C = 6 V			10		µA
C_O	Output bypass capacitance	ESR = 0.1 to 10 Ω I_O = 0 to 500 mA		2	10		µF

Refer to test circuits, T_a = -40 to 125 °C, C_I = 0.1 µF, C_O = 2.2 µF unless otherwise specified.

Table 6: LF18C (automotive grade) electrical characteristics

Symbol	Parameter	Test condition		Min.	Typ.	Max.	Unit
V_O	Output voltage	I_O = 50 mA V_I = 3.5 V T_a = 25 °C		1.764	1.8	1.836	V
		I_O = 50 mA V_I = 3.5 V		1.713		1.887	
V_I	Operating input voltage	I_O = 500 mA		3		16	V
I_O	Output current limit	T_a = 25 °C			1		A
ΔV_O	Line regulation	V_I = 2.8 to 16 V I_O = 5 mA			2	15	mV
ΔV_O	Load regulation	V_I = 3.3 V I_O = 5 to 500 mA			2	15	mV
I_d	Quiescent current	V_I = 2.5 to 16 V I_O = 0 mA	ON mode		0.5	2	mA
		V_I = 3.1 to 16 V I_O = 500 mA				12	
		V_I = 6 V	OFF mode		50	120	µA
SVR	Supply voltage rejection	I_O = 5 mA V_I = 3.5 ± 1 V T_a = 25 °C	f = 120 Hz		82		dB
			f = 1 kHz		77		
			f = 10 kHz		60		
eN	Output noise voltage	B = 10 Hz to 100 kHz T_a = 25 °C			50		µV
V_d	Dropout voltage	I_O = 200 mA			0.2	1.3	V
		I_O = 500 mA			0.4	1.3	
V_{IL}	Control input logic low					0.8	V
V_{IH}	Control input logic high			2			V
I_I	Control input current	V_I = 6 V V_C = 6 V T_a = 25 °C			10		µA
C_O	Output bypass capacitance	ESR = 0.1 to 10 Ω I_O = 0 to 500 mA		2	10		µF

Refer to test circuits, T_J = 25 °C, C_I = 0.1 µF, C_O = 2.2 µF unless otherwise specified.

Table 7: LF25AB electrical characteristics

Symbol	Parameter	Test condition		Min.	Typ.	Max.	Unit
V_O	Output voltage	I_O = 50 mA V_I = 4.5 V		2.475	2.5	2.525	V
		I_O = 50 mA V_I = 4.5 V T_a = -25 to 85 °C		2.450		2.550	
V_I	Operating input voltage	I_O = 500 mA				16	V
I_O	Output current limit				1		A
ΔV_O	Line regulation	V_I = 3.5 to 16 V I_O = 5 mA			2	12	mV
ΔV_O	Load regulation	V_I = 3.8 V I_O = 5 to 500 mA			2	12	mV
I_d	Quiescent current	V_I = 3.5 to 16 V I_O = 0 mA	ON mode		0.5	1	mA
		V_I = 3.8 to 16 V I_O = 500 mA				12	
		V_I = 6 V	OFF mode		50	100	µA
SVR	Supply voltage rejection	I_O = 5 mA V_I = 4.5 ± 1 V	f = 120 Hz		82		dB
			f = 1 kHz		77		
			f = 10 kHz		65		
eN	Output noise voltage	B = 10 Hz to 100 kHz			50		µV
V_d	Dropout voltage	I_O = 200 mA			0.2	0.35	V
		I_O = 500 mA			0.4	0.7	
V_{IL}	Control input logic low	T_a = -40 to 125 °C				0.8	V
V_{IH}	Control input logic high	T_a = -40 to 125 °C		2			V
I_I	Control input current	V_I = 6 V V_C = 6 V			10		µA
C_O	Output bypass capacitance	ESR = 0.1 to 10 Ω I_O = 0 to 500 mA		2	10		µF

Refer to test circuits, T_a = -40 to 125 °C, C_I = 0.1 µF, C_O = 2.2 µF unless otherwise specified.

Table 8: LF25AB (automotive grade) electrical characteristics

Symbol	Parameter	Test condition		Min.	Typ.	Max.	Unit
V_O	Output voltage	I_O = 50 mA V_I = 4.5 V T_a = 25 °C		2.475	2.5	2.525	V
		I_O = 50 mA V_I = 4.5 V		2.435		2.565	
V_I	Operating input voltage	I_O = 500 mA				16	V
I_O	Output current limit	T_a = 25 °C			1		A
ΔV_O	Line regulation	V_I = 3.5 to 16 V I_O = 5 mA			2	15	mV
ΔV_O	Load regulation	V_I = 3.8 V I_O = 5 to 500 mA			2	15	mV
I_d	Quiescent current	V_I = 3.5 to 16 V I_O = 0 mA	ON mode		0.5	2	mA
		V_I = 3.8 to 16 V I_O = 500 mA				12	
		V_I = 6 V	OFF mode		50	120	µA
SVR	Supply voltage rejection	I_O = 5 mA V_I = 4.5 ± 1 V T_a = 25 °C	f = 120 Hz		82		dB
			f = 1 kHz		77		
			f = 10 kHz		65		
eN	Output noise voltage	B = 10 Hz to 100 kHz T_a = 25 °C			50		µV
V_d	Dropout voltage	I_O = 200 mA			0.2	1.3	V
		I_O = 500 mA			0.4	1.3	
V_{IL}	Control input logic low					0.8	V
V_{IH}	Control input logic high			2			V
I_I	Control input current	V_I = 6 V V_C = 6 V T_a = 25 °C			10		µA
C_O	Output bypass capacitance	ESR = 0.1 to 10 Ω I_O = 0 to 500 mA		2	10		µF

Refer to test circuits, T_J = 25 °C, C_I = 0.1 µF, C_O = 2.2 µF unless otherwise specified.

Table 9: LF25C electrical characteristics

Symbol	Parameter	Test condition		Min.	Typ.	Max.	Unit
V_O	Output voltage	I_O = 50 mA V_I = 4.5 V		2.45	2.5	2.55	V
		I_O = 50 mA V_I = 4.5 V T_a = -25 to 85 °C		2.4		2.6	
V_I	Operating input voltage	I_O = 500 mA				16	V
I_O	Output current limit				1		A
ΔV_O	Line regulation	V_I = 3.5 to 16 V I_O = 5 mA			2	12	mV
ΔV_O	Load regulation	V_I = 3.8 V I_O = 5 to 500 mA			2	12	mV
I_d	Quiescent current	V_I = 3.5 to 16 V I_O = 0 mA	ON mode		0.5	1	mA
		V_I = 3.8 to 16 V I_O = 500 mA				12	
		V_I = 6 V	OFF mode		50	100	µA
SVR	Supply voltage rejection	I_O = 5 mA V_I = 4.5 ± 1 V	f = 120 Hz		82		dB
			f = 1 kHz		77		
			f = 10 kHz		65		
eN	Output noise voltage	B = 10 Hz to 100 kHz			50		µV
V_d	Dropout voltage	I_O = 200 mA			0.2	0.35	V
		I_O = 500 mA			0.4	0.7	
V_{IL}	Control input logic low	T_a = -40 to 125 °C				0.8	V
V_{IH}	Control input logic high	T_a = -40 to 125 °C		2			V
I_I	Control input current	V_I = 6 V V_C = 6 V			10		µA
C_O	Output bypass capacitance	ESR = 0.1 to 10 Ω I_O = 0 to 500 mA		2	10		µF

Refer to test circuits, T_a = -40 to 125 °C, C_I = 0.1 µF, C_O = 2.2 µF unless otherwise specified.

Table 10: LF25C (automotive grade) electrical characteristics

Symbol	Parameter	Test condition		Min.	Typ.	Max.	Unit
V_O	Output voltage	I_O = 50 mA V_I = 4.5 V T_a = 25 °C		2.45	2.5	2.55	V
		I_O = 50 mA V_I = 4.5 V		2.385		2.615	
V_I	Operating input voltage	I_O = 500 mA				16	V
I_O	Output current limit	T_a = 25 °C			1		A
ΔV_O	Line regulation	V_I = 3.5 to 16 V I_O = 5 mA			2	15	mV
ΔV_O	Load regulation	V_I = 3.8 V I_O = 5 to 500 mA			2	15	mV
I_d	Quiescent current	V_I = 3.5 to 16 V I_O = 0 mA	ON mode		0.5	2	mA
		V_I = 3.8 to 16 V I_O = 500 mA				12	
		V_I = 6 V	OFF mode		50	120	µA
SVR	Supply voltage rejection	I_O = 5 mA V_I = 4.5 ± 1 V T_a = 25 °C	f = 120 Hz		82		dB
			f = 1 kHz		77		
			f = 10 kHz		65		
eN	Output noise voltage	B = 10 Hz to 100 kHz T_a = 25 °C			50		µV
V_d	Dropout voltage	I_O = 200 mA			0.2	1.3	V
		I_O = 500 mA			0.4	1.3	
V_{IL}	Control input logic low					0.8	V
V_{IH}	Control input logic high			2			V
I_I	Control input current	V_I = 6 V V_C = 6 V T_a = 25 °C			10		µA
C_O	Output bypass capacitance	ESR = 0.1 to 10 Ω I_O = 0 to 500 mA		2	10		µF

Refer to test circuits, T_J = 25 °C, C_I = 0.1 µF, C_O = 2.2 µF unless otherwise specified.

Table 11: LF33AB electrical characteristics

Symbol	Parameter	Test condition		Min.	Typ.	Max.	Unit
V_O	Output voltage	I_O = 50 mA V_I = 5.3 V		3.267	3.3	3.333	V
		I_O = 50 mA V_I = 5.3 V T_a = -25 to 85 °C		3.234		3.366	
V_I	Operating input voltage	I_O = 500 mA				16	V
I_O	Output current limit				1		A
ΔV_O	Line regulation	V_I = 4.3 to 16 V I_O = 5 mA			3	16	mV
ΔV_O	Load regulation	V_I = 4.6 V I_O = 5 to 500 mA			3	16	mV
I_d	Quiescent current	V_I = 4.3 to 16 V I_O = 0 mA	ON mode		0.5	1	mA
		V_I = 4.6 to 16 V I_O = 500 mA				12	
		V_I = 6 V	OFF mode		50	100	µA
SVR	Supply voltage rejection	I_O = 5 mA V_I = 5.3 ± 1 V	f = 120 Hz		80		dB
			f = 1 kHz		75		
			f = 10 kHz		65		
eN	Output noise voltage	B = 10 Hz to 100 kHz			50		µV
V_d	Dropout voltage	I_O = 200 mA			0.2	0.35	V
		I_O = 500 mA			0.4	0.7	
V_{IL}	Control input logic low	T_a = -40 to 125 °C				0.8	V
V_{IH}	Control input logic high	T_a = -40 to 125 °C		2			V
I_I	Control input current	V_I = 6 V V_C = 6 V			10		µA
C_O	Output bypass capacitance	ESR = 0.1 to 10 Ω I_O = 0 to 500 mA		2	10		µF

Refer to test circuits, T_J = 25 °C, C_I = 0.1 µF, C_O = 2.2 µF unless otherwise specified.

Table 12: LF33C electrical characteristics

Symbol	Parameter	Test condition		Min.	Typ.	Max.	Unit
V_O	Output voltage	I_O = 50 mA V_I = 5.3 V		3.234	3.3	3.366	V
		I_O = 50 mA V_I = 5.3 V T_a = -25 to 85 °C		3.168		3.432	
V_I	Operating input voltage	I_O = 500 mA				16	V
I_O	Output current limit				1		A
ΔV_O	Line regulation	V_I = 4.3 to 16 V I_O = 5 mA			3	16	mV
ΔV_O	Load regulation	V_I = 4.6 V I_O = 5 to 500 mA			3	16	mV
I_d	Quiescent current	V_I = 4.3 to 16 V I_O = 0 mA	ON mode		0.5	1	mA
		V_I = 4.6 to 16 V I_O = 500 mA				12	
		V_I = 6 V	OFF mode		50	100	µA
SVR	Supply voltage rejection	I_O = 5 mA V_I = 5.3 ± 1 V	f = 120 Hz		80		dB
			f = 1 kHz		75		
			f = 10 kHz		65		
eN	Output noise voltage	B = 10 Hz to 100 kHz			50		µV
V_d	Dropout voltage	I_O = 200 mA			0.2	0.35	V
		I_O = 500 mA			0.4	0.7	
V_{IL}	Control input logic low	T_a = -40 to 125 °C				0.8	V
V_{IH}	Control input logic high	T_a = -40 to 125 °C		2			V
I_I	Control input current	V_I = 6 V V_C = 6 V			10		µA
C_O	Output bypass capacitance	ESR = 0.1 to 10 Ω I_O = 0 to 500 mA		2	10		µF

Refer to test circuits, T_a = -40 to 125 °C, C_I = 0.1 µF, C_O = 2.2 µF unless otherwise specified.

Table 13: LF33C (automotive grade) electrical characteristics

Symbol	Parameter	Test condition		Min.	Typ.	Max.	Unit
V_O	Output voltage	I_O = 50 mA V_I = 5.3 V T_a = 25 °C		3.234	3.3	3.366	V
		I_O = 50 mA V_I = 5.3 V,		3.153		3.447	
V_I	Operating input voltage	I_O = 500 mA				16	V
I_O	Output current limit	T_a = 25 °C			1		A
ΔV_O	Line regulation	V_I = 4.3 to 16 V I_O = 5 mA			3	19	mV
ΔV_O	Load regulation	V_I = 4.6 V I_O = 5 to 500 mA			3	19	mV
I_d	Quiescent current	V_I = 4.3 to 16 V I_O = 0 mA	ON mode		0.5	2	mA
		V_I = 4.6 to 16 V I_O = 500 mA				12	
		V_I = 6 V	OFF mode		50	120	µA
SVR	Supply voltage rejection	I_O = 5 mA V_I = 5.3 ± 1 V T_a = 25 °C	f = 120 Hz		80		dB
			f = 1 kHz		75		
			f = 10 kHz		65		
eN	Output noise voltage	B = 10 Hz to 100 kHz T_a = 25 °C			50		µV
V_d	Dropout voltage	I_O = 200 mA			0.2	1.3	V
		I_O = 500 mA			0.4	1.3	
V_{IL}	Control input logic low					0.8	V
V_{IH}	Control input logic high			2			V
I_I	Control input current	V_I = 6 V V_C = 6 V T_a = 25 °C			10		µA
C_O	Output bypass capacitance	ESR = 0.1 to 10 Ω I_O = 0 to 500 mA		2	10		µF

Refer to test circuits, T_a = -40 to 125 °C, C_I = 0.1 µF, C_O = 2.2 µF unless otherwise specified.

Table 14: LF50AB electrical characteristics

Symbol	Parameter	Test condition		Min.	Typ.	Max.	Unit
V_O	Output voltage	I_O = 50 mA V_I = 7 V		4.95	5	5.05	V
		I_O = 50 mA V_I = 7 V T_a = -25 to 85 °C		4.9		5.1	
V_I	Operating input voltage	I_O = 500 mA				16	V
I_O	Output current limit				1		A
ΔV_O	Line regulation	V_I = 6 to 16 V I_O = 5 mA			5	25	mV
ΔV_O	Load regulation	V_I = 6.3 V I_O = 5 to 500 mA			5	25	mV
I_d	Quiescent current	V_I = 6 to 16 V I_O = 0 mA	ON mode		0.5	1	mA
		V_I = 6.3 to 16 V I_O = 500 mA				12	
		V_I = 6 V	OFF mode		50	100	µA
SVR	Supply voltage rejection	I_O = 5 mA V_I = 7 ± 1 V	f = 120 Hz		76		dB
			f = 1 kHz		71		
			f = 10 kHz		60		
eN	Output noise voltage	B = 10 Hz to 100 kHz			50		µV
V_d	Dropout voltage	I_O = 200 mA			0.2	0.35	V
		I_O = 500 mA			0.4	0.7	
V_{IL}	Control input logic low	T_a = -40 to 125 °C				0.8	V
V_{IH}	Control input logic high	T_a = -40 to 125 °C		2			V
I_I	Control input current	V_I = 6 V V_C = 6 V			10		µA
C_O	Output bypass capacitance	ESR = 0.1 to 10 Ω I_O = 0 to 500 mA		2	10		µF

Refer to test circuits, T_a = -40 to 125 °C, C_I = 0.1 µF, C_O = 2.2 µF unless otherwise specified.

Table 15: LF50AB (automotive grade) electrical characteristics

Symbol	Parameter	Test condition		Min.	Typ.	Max.	Unit
V_O	Output voltage	I_O = 50 mA V_I = 7 V T_a = 25 °C		4.95	5	5.05	V
		I_O = 50 mA V_I = 7 V		4.885		5.115	
V_I	Operating input voltage	I_O = 500 mA				16	V
I_O	Output current limit	T_a = 25 °C			1		A
ΔV_O	Line regulation	V_I = 6 to 16 V I_O = 5 mA			5	28	mV
ΔV_O	Load regulation	V_I = 6.3 V I_O = 5 to 500 mA			5	28	mV
I_d	Quiescent current	V_I = 6 to 16 V I_O = 0 mA	ON mode		0.5	2	mA
		V_I = 6.3 to 16 V I_O = 500 mA				12	
		V_I = 6 V	OFF mode		50	120	µA
SVR	Supply voltage rejection	I_O = 5 mA V_I = 7 ± 1 V T_a = 25 °C	f = 120 Hz		76		dB
			f = 1 kHz		71		
			f = 10 kHz		60		
eN	Output noise voltage	B = 10 Hz to 100 kHz T_a = 25 °C			50		µV
V_d	Dropout voltage	I_O = 200 mA			0.2	1.3	V
		I_O = 500 mA			0.4	1.3	
V_{IL}	Control input logic low					0.8	V
V_{IH}	Control input logic high			2			V
I_I	Control input current	V_I = 6 V V_C = 6 V T_a = 25 °C			10		µA
C_O	Output bypass capacitance	ESR = 0.1 to 10 Ω I_O = 0 to 500 mA		2	10		µF

Refer to test circuits, T_J = 25 °C, C_I = 0.1 µF, C_O = 2.2 µF unless otherwise specified.

Table 16: LF50AC electrical characteristics

Symbol	Parameter	Test condition		Min.	Typ.	Max.	Unit
V_O	Output voltage	I_O = 50 mA V_I = 7 V		4.925	5	5.075	V
		I_O = 50 mA V_I = 7 V T_a = -25 to 85 °C		4.875		5.125	
V_I	Operating input voltage	I_O = 500 mA				16	V
I_O	Output current limit				1		A
ΔV_O	Line regulation	V_I = 6 to 16 V I_O = 5 mA			5	25	mV
ΔV_O	Load regulation	V_I = 6.3 V I_O = 5 to 500 mA			5	25	mV
I_d	Quiescent current	V_I = 6 to 16 V I_O = 0 mA	ON mode		0.5	1	mA
		V_I = 6.3 to 16 V I_O = 500 mA				12	
		V_I = 6 V	OFF mode		50	100	µA
SVR	Supply voltage rejection	I_O = 5 mA V_I = 7 ± 1 V	f = 120 Hz		76		dB
			f = 1 kHz		71		
			f = 10 kHz		60		
eN	Output noise voltage	B = 10 Hz to 100 kHz			50		µV
V_d	Dropout voltage	I_O = 200 mA			0.2	0.35	V
		I_O = 500 mA			0.4	0.7	
V_{IL}	Control input logic low	T_a = -40 to 125 °C				0.8	V
V_{IH}	Control input logic high	T_a = -40 to 125 °C		2			V
I_I	Control input current	V_I = 6 V V_C = 6 V			10		µA
C_O	Output bypass capacitance	ESR = 0.1 to 10 Ω I_O = 0 to 500 mA		2	10		µF

Refer to test circuits, T_J = 25 °C, C_I = 0.1 µF, C_O = 2.2 µF unless otherwise specified.

Table 17: LF50C electrical characteristics

Symbol	Parameter	Test condition		Min.	Typ.	Max.	Unit
V_O	Output voltage	I_O = 50 mA V_I = 7 V		4.9	5	5.1	V
		I_O = 50 mA V_I = 7 V T_a = -25 to 85 °C		4.8		5.2	
V_I	Operating input voltage	I_O = 500 mA				16	V
I_O	Output current limit				1		A
ΔV_O	Line regulation	V_I = 6 to 16 V I_O = 5 mA			5	25	mV
ΔV_O	Load regulation	V_I = 6.3 V I_O = 5 to 500 mA			5	25	mV
I_d	Quiescent current	V_I = 6 to 16 V I_O = 0 mA	ON mode		0.5	1	mA
		V_I = 6.3 to 16 V I_O = 500 mA				12	
		V_I = 6 V	OFF mode		50	100	µA
SVR	Supply voltage rejection	I_O = 5 mA V_I = 7 ± 1 V	f = 120 Hz		76		dB
			f = 1 kHz		71		
			f = 10 kHz		60		
eN	Output noise voltage	B = 10 Hz to 100 kHz			50		µV
V_d	Dropout voltage	I_O = 200 mA			0.2	0.35	V
		I_O = 500 mA			0.4	0.7	
V_{IL}	Control input logic low	T_a = -40 to 125 °C				0.8	V
V_{IH}	Control input logic high	T_a = -40 to 125 °C		2			V
I_I	Control input current	V_I = 6 V V_C = 6 V			10		µA
C_O	Output bypass capacitance	ESR = 0.1 to 10 Ω I_O = 0 to 500 mA		2	10		µF

Refer to test circuits, T_a = -40 to 125 °C, C_I = 0.1 µF, C_O = 2.2 µF unless otherwise specified.

Table 18: LF50C (automotive grade) electrical characteristics

Symbol	Parameter	Test condition		Min.	Typ.	Max.	Unit
V_O	Output voltage	I_O = 50 mA V_I = 7 V T_a = 25 °C		4.9	5	5.1	V
		I_O = 50 mA V_I = 7 V		4.785		5.215	
V_I	Operating input voltage	I_O = 500 mA				16	V
I_O	Output current limit	T_a = 25 °C			1		A
ΔV_O	Line regulation	V_I = 6 to 16 V I_O = 5 mA			5	28	mV
ΔV_O	Load regulation	V_I = 6.3 V I_O = 5 to 500 mA			5	28	mV
I_d	Quiescent current	V_I = 6 to 16 V I_O = 0 mA	ON mode		0.5	2	mA
		V_I = 6.3 to 16 V I_O = 500 mA				12	
		V_I = 6 V	OFF mode		50	120	µA
SVR	Supply voltage rejection	I_O = 5 mA V_I = 7 ± 1 V T_a = 25 °C	f = 120 Hz		76		dB
			f = 1 kHz		71		
			f = 10 kHz		60		
eN	Output noise voltage	B = 10 Hz to 100 kHz T_a = 25 °C			50		µV
V_d	Dropout voltage	I_O = 200 mA			0.2	1.3	V
		I_O = 500 mA			0.4	1.3	
V_{IL}	Control input logic low					0.8	V
V_{IH}	Control input logic high			2			V
I_I	Control input current	V_I = 6 V V_C = 6 V T_a = 25 °C			10		µA
C_O	Output bypass capacitance	ESR = 0.1 to 10 Ω I_O = 0 to 500 mA		2	10		µF

Refer to test circuits, T_J = 25 °C, C_I = 0.1 µF, C_O = 2.2 µF unless otherwise specified.

Table 19: LF60AB electrical characteristics

Symbol	Parameter	Test condition		Min.	Typ.	Max.	Unit
V_O	Output voltage	I_O = 50 mA V_I = 8 V		5.94	6	6.06	V
		I_O = 50 mA V_I = 8 V T_a = -25 to 85 °C		5.88		6.12	
V_I	Operating input voltage	I_O = 500 mA				16	V
I_O	Output current limit				1		A
ΔV_O	Line regulation	V_I = 7 to 16 V I_O = 5 mA			6	30	mV
ΔV_O	Load regulation	V_I = 7.3 V I_O = 5 to 500 mA			6	30	mV
I_d	Quiescent current	V_I = 7 to 16 V I_O = 0 mA	ON mode		0.7	1.5	mA
		V_I = 7.3 to 16 V I_O = 500 mA				12	
		V_I = 9 V	OFF mode		70	140	µA
SVR	Supply voltage rejection	I_O = 5 mA V_I = 8 ± 1 V	f = 120 Hz		75		dB
			f = 1 kHz		70		
			f = 10 kHz		60		
eN	Output noise voltage	B = 10 Hz to 100 kHz			50		µV
V_d	Dropout voltage	I_O = 200 mA			0.2	0.35	V
		I_O = 500 mA			0.4	0.7	
V_{IL}	Control input logic low	T_a = -40 to 125 °C				0.8	V
V_{IH}	Control input logic high	T_a = -40 to 125 °C		2			V
I_I	Control input current	V_I = 9 V V_C = 6 V			10		µA
C_O	Output bypass capacitance	ESR = 0.1 to 10 Ω I_O = 0 to 500 mA		2	10		µF

Refer to test circuits, T_J = 25 °C, C_I = 0.1 µF, C_O = 2.2 µF unless otherwise specified.

Table 20: LF60C electrical characteristics

Symbol	Parameter	Test condition		Min.	Typ.	Max.	Unit
V_O	Output voltage	I_O = 50 mA V_I = 8 V		5.88	6	6.12	V
		I_O = 50 mA V_I = 8 V T_a = -25 to 85 °C		5.76		6.24	
V_I	Operating input voltage	I_O = 500 mA				16	V
I_O	Output current limit				1		A
ΔV_O	Line regulation	V_I = 7 to 16 V I_O = 5 mA			6	30	mV
ΔV_O	Load regulation	V_I = 7.3 V I_O = 5 to 500 mA			6	30	mV
I_d	Quiescent current	V_I = 7 to 16 V I_O = 0 mA	ON mode		0.7	1.5	mA
		V_I = 7.3 to 16 V I_O = 500 mA				12	
		V_I = 9 V	OFF mode		70	140	µA
SVR	Supply voltage rejection	I_O = 5 mA V_I = 8 ± 1 V	f = 120 Hz		75		dB
			f = 1 kHz		70		
			f = 10 kHz		60		
eN	Output noise voltage	B = 10 Hz to 100 kHz			50		µV
V_d	Dropout voltage	I_O = 200 mA			0.2	0.35	V
		I_O = 500 mA			0.4	0.7	
V_{IL}	Control input logic low	T_a = -40 to 125 °C				0.8	V
V_{IH}	Control input logic high	T_a = -40 to 125 °C		2			V
I_I	Control input current	V_I = 9 V V_C = 6 V			10		µA
C_O	Output bypass capacitance	ESR = 0.1 to 10 Ω I_O = 0 to 500 mA		2	10		µF

Refer to test circuits, T_J = 25 °C, C_I = 0.1 µF, C_O = 2.2 µF unless otherwise specified.

Table 21: LF80AB electrical characteristics

Symbol	Parameter	Test condition		Min.	Typ.	Max.	Unit
V_O	Output voltage	I_O = 50 mA V_I = 10 V		7.92	8	8.08	V
		I_O = 50 mA V_I = 10 V T_a = -25 to 85 °C		7.84		8.16	
V_I	Operating input voltage	I_O = 500 mA				16	V
I_O	Output current limit				1		A
ΔV_O	Line regulation	V_I = 9 to 16 V I_O = 5 mA			8	40	mV
ΔV_O	Load regulation	V_I = 9.3 V I_O = 5 to 500 mA			8	40	mV
I_d	Quiescent current	V_I = 9 to 16 V I_O = 0 mA	ON mode		0.7	1.5	mA
		V_I = 9.3 to 16 V I_O = 500 mA				12	
		V_I = 9 V	OFF mode		70	140	µA
SVR	Supply voltage rejection	I_O = 5 mA V_I = 10 ± 1 V	f = 120 Hz		72		dB
			f = 1 kHz		67		
			f = 10 kHz		57		
eN	Output noise voltage	B = 10 Hz to 100 kHz			50		µV
V_d	Dropout voltage	I_O = 200 mA			0.2	0.35	V
		I_O = 500 mA			0.4	0.7	
V_{IL}	Control input logic low	T_a = -40 to 125 °C				0.8	V
V_{IH}	Control input logic high	T_a = -40 to 125 °C		2			V
I_I	Control input current	V_I = 9 V V_C = 6 V			10		µA
C_O	Output bypass capacitance	ESR = 0.1 to 10 Ω I_O = 0 to 500 mA		2	10		µF

Refer to test circuits, T_J = 25 °C, C_I = 0.1 µF, C_O = 2.2 µF unless otherwise specified.

Table 22: LF80C electrical characteristics

Symbol	Parameter	Test condition		Min.	Typ.	Max.	Unit
V_O	Output voltage	I_O = 50 mA V_I = 10 V		7.84	8	8.16	V
		I_O = 50 mA V_I = 10 V T_a = -25 to 85 °C		7.68		8.32	
V_I	Operating input voltage	I_O = 500 mA				16	V
I_O	Output current limit				1		A
ΔV_O	Line regulation	V_I = 9 to 16 V I_O = 5 mA			8	40	mV
ΔV_O	Load regulation	V_I = 9.3 V I_O = 5 to 500 mA			8	40	mV
I_d	Quiescent current	V_I = 9 to 16 V I_O = 0 mA	ON mode		0.7	1.5	mA
		V_I = 9.3 to 16 V I_O = 500 mA				12	
		V_I = 9 V	OFF mode		70	140	µA
SVR	Supply voltage rejection	I_O = 5 mA V_I = 10 ± 1 V	f = 120 Hz		72		dB
			f = 1 kHz		67		
			f = 10 kHz		57		
eN	Output noise voltage	B = 10 Hz to 100 kHz			50		µV
V_d	Dropout voltage	I_O = 200 mA			0.2	0.35	V
		I_O = 500 mA			0.4	0.7	
V_{IL}	Control input logic low	T_a = -40 to 125 °C				0.8	V
V_{IH}	Control input logic high	T_a = -40 to 125 °C		2			V
I_I	Control input current	V_I = 9 V V_C = 6 V			10		µA
C_O	Output bypass capacitance	ESR = 0.1 to 10 Ω I_O = 0 to 500 mA		2	10		µF

Refer to test circuits, T_a = -40 to 125 °C, C_I = 0.1 µF, C_O = 2.2 µF unless otherwise specified.

Table 23: LF80C (automotive grade) electrical characteristics

Symbol	Parameter	Test condition		Min.	Typ.	Max.	Unit
V_O	Output voltage	I_O = 50 mA V_I = 10 V T_a = 25 °C		7.84	8	8.16	V
		I_O = 50 mA V_I = 10 V		7.665		8.335	
V_I	Operating input voltage	I_O = 500 mA				16	V
I_O	Output current limit	T_a = 25 °C			1		A
ΔV_O	Line regulation	V_I = 9 to 16 V I_O = 5 mA			8	44	mV
ΔV_O	Load regulation	V_I = 9.3 V I_O = 5 to 500 mA			8	44	mV
I_d	Quiescent current	V_I = 9 to 16 V I_O = 0 mA	ON mode		0.7	2.5	mA
		V_I = 9.3 to 16 V I_O = 500 mA				12	
		V_I = 9 V	OFF mode		70	160	µA
SVR	Supply voltage rejection	I_O = 5 mA V_I = 10 ± 1 V T_a = 25 °C	f = 120 Hz		72		dB
			f = 1 kHz		67		
			f = 10 kHz		57		
eN	Output noise voltage	B = 10 Hz to 100 kHz T_a = 25 °C			50		µV
V_d	Dropout voltage	I_O = 200 mA			0.2	1.3	V
		I_O = 500 mA			0.4	1.3	
V_{IL}	Control input logic low					0.8	V
V_{IH}	Control input logic high			2			V
I_I	Control input current	V_I = 9 V V_C = 6 V T_a = 25 °C			10		µA
C_O	Output bypass capacitance	ESR = 0.1 to 10 Ω I_O = 0 to 500 mA		2	10		µF

Refer to test circuits, T_J = 25 °C, C_I = 0.1 µF, C_O = 2.2 µF unless otherwise specified.

Table 24: LF85AB electrical characteristics

Symbol	Parameter	Test condition		Min.	Typ.	Max.	Unit
V_O	Output voltage	I_O = 50 mA V_I = 10.5 V		8.415	8.5	8.585	V
		I_O = 50 mA V_I = 10.5 V T_a = -25 to 85 °C		8.33		8.67	
V_I	Operating input voltage	I_O = 500 mA				16	V
I_O	Output current limit				1		A
ΔV_O	Line regulation	V_I = 9.5 to 16 V I_O = 5 mA			8	42	mV
ΔV_O	Load regulation	V_I = 9.8 V I_O = 5 to 500 mA			8	42	mV
I_d	Quiescent current	V_I = 9.5 to 16 V I_O = 0 mA	ON mode		0.7	1.5	mA
		V_I = 9.8 to 16 V I_O = 500 mA				12	
		V_I = 9 V	OFF mode		70	140	µA
SVR	Supply voltage rejection	I_O = 5 mA V_I = 10.5 ± 1 V	f = 120 Hz		72		dB
			f = 1 kHz		67		
			f = 10 kHz		57		
eN	Output noise voltage	B = 10 Hz to 100 kHz			50		µV
V_d	Dropout voltage	I_O = 200 mA			0.2	0.35	V
		I_O = 500 mA			0.4	0.7	
V_{IL}	Control input logic low	T_a = -40 to 125 °C				0.8	V
V_{IH}	Control input logic high	T_a = -40 to 125 °C		2			V
I_I	Control input current	V_I = 9 V V_C = 6 V			10		µA
C_O	Output bypass capacitance	ESR = 0.1 to 10 Ω I_O = 0 to 500 mA		2	10		µF

Refer to test circuits, T_J = 25 °C, C_I = 0.1 µF, C_O = 2.2 µF unless otherwise specified.

Table 25: LF85C electrical characteristics

Symbol	Parameter	Test condition		Min.	Typ.	Max.	Unit
V_O	Output voltage	I_O = 50 mA V_I = 10.5 V		8.33	8.5	8.67	V
		I_O = 50 mA V_I = 10.5 V T_a = -25 to 85 °C		8.16		8.84	
V_I	Operating input voltage	I_O = 500 mA				16	V
I_O	Output current limit				1		A
ΔV_O	Line regulation	V_I = 9.5 to 16 V I_O = 5 mA			8	42	mV
ΔV_O	Load regulation	V_I = 9.8 V I_O = 5 to 500 mA			8	42	mV
I_d	Quiescent current	V_I = 9.5 to 16 V I_O = 0 mA	ON mode		0.7	1.5	mA
		V_I = 9.8 to 16 V I_O= 500 mA				12	
		V_I = 9 V	OFF mode		70	140	µA
SVR	Supply voltage rejection	I_O = 5 mA V_I = 10.5 ± 1 V	f = 120 Hz		72		dB
			f = 1 kHz		67		
			f = 10 kHz		57		
eN	Output noise voltage	B = 10 Hz to 100 kHz			50		µV
V_d	Dropout voltage	I_O = 200 mA			0.2	0.35	V
		I_O = 500 mA			0.4	0.7	
V_{IL}	Control input logic low	T_a = -40 to 125 °C				0.8	V
V_{IH}	Control input logic high	T_a = -40 to 125 °C		2			V
I_I	Control input current	V_I = 9 V V_C = 6 V			10		µA
C_O	Output bypass capacitance	ESR = 0.1 to 10 Ω I_O = 0 to 500 mA		2	10		µF

Refer to test circuits, T_a = -40 to 125 °C, C_I = 0.1 µF, C_O = 2.2 µF unless otherwise specified.

Table 26: LF85C (automotive grade) electrical characteristics

Symbol	Parameter	Test condition		Min.	Typ.	Max.	Unit
V_O	Output voltage	I_O = 50 mA V_I = 10.5 V T_a = 25 °C		8.33	8.5	8.67	V
		I_O = 50 mA V_I = 10.5 V		8.145		8.855	
V_I	Operating input voltage	I_O = 500 mA				16	V
I_O	Output current limit	T_a = 25 °C			1		A
ΔV_O	Line regulation	V_I = 9.5 to 16 V I_O = 5 mA			8	44	mV
ΔV_O	Load regulation	V_I = 9.8 V I_O = 5 to 500 mA			8	44	mV
I_d	Quiescent current	V_I = 9.5 to 16 V I_O = 0 mA	ON mode		0.7	2.5	mA
		V_I = 9.8 to 16 V I_O = 500 mA				12	
		V_I = 9 V	OFF mode		70	160	µA
SVR	Supply voltage rejection	I_O = 5 mA V_I = 10.5 ± 1 V T_a = 25 °C	f = 120 Hz		72		dB
			f = 1 kHz		67		
			f = 10 kHz		57		
eN	Output noise voltage	B = 10 Hz to 100 kHz T_a = 25 °C			50		µV
V_d	Dropout voltage	I_O = 200 mA			0.2	1.3	V
		I_O = 500 mA			0.4	1.3	
V_{IL}	Control input logic low					0.8	V
V_{IH}	Control input logic high			2			V
I_I	Control input current	V_I = 9 V V_C = 6 V T_a = 25 °C			10		µA
C_O	Output bypass capacitance	ESR = 0.1 to 10 Ω I_O = 0 to 500 mA		2	10		µF

Refer to test circuits, T_J = 25 °C, C_I = 0.1 µF, C_O = 2.2 µF unless otherwise specified.

Table 27: LF90C electrical characteristics

Symbol	Parameter	Test condition		Min.	Typ.	Max.	Unit
V_O	Output voltage	I_O = 50 mA V_I = 11 V		8.82	9	9.18	V
		I_O = 50 mA V_I = 11 V T_a = -25 to 85 °C		8.64		9.36	
V_I	Operating input voltage	I_O = 500 mA				16	V
I_O	Output current limit				1		A
ΔV_O	Line regulation	V_I = 10 to 16 V I_O = 5 mA			9	45	mV
ΔV_O	Load regulation	V_I = 10.3 V I_O = 5 to 500 mA			9	45	mV
I_d	Quiescent current	V_I = 10 to 16 V I_O = 0 mA	ON mode		0.7	1.5	mA
		V_I = 10.3 to 16V I_O = 500 mA				12	
		V_I = 10 V	OFF mode		70	140	µA
SVR	Supply voltage rejection	I_O = 5 mA V_I = 11 ± 1 V	f = 120 Hz		71		dB
			f = 1 kHz		66		
			f = 10 kHz		56		
eN	Output noise voltage	B = 10 Hz to 100 kHz			50		µV
V_d	Dropout voltage	I_O = 200 mA			0.2	0.35	V
		I_O = 500 mA			0.4	0.7	
V_{IL}	Control input logic low	T_a = -40 to 125 °C				0.8	V
V_{IH}	Control input logic high	T_a = -40 to 125 °C		2			V
I_I	Control input current	V_I = 10 V V_C = 6 V			10		µA
C_O	Output bypass capacitance	ESR = 0.1 to 10 Ω I_O = 0 to 500 mA		2	10		µF

Refer to test circuits, T_J = 25 °C, C_I = 0.1 µF, C_O = 2.2 µF unless otherwise specified.

Table 28: LF120AB electrical characteristics

Symbol	Parameter	Test condition		Min.	Typ.	Max.	Unit
V_O	Output voltage	I_O = 50 mA V_I = 15 V		11.88	12	12.12	V
		I_O = 50 mA V_I = 15 V T_a = -25 to 85 °C		11.76		12.24	
V_I	Operating input voltage	I_O = 500 mA				16	V
I_O	Output current limit				1		A
ΔV_O	Line regulation	V_I = 13 to 16 V I_O = 5 mA			12	60	mV
ΔV_O	Load regulation	V_I = 13.3 V I_O = 5 to 500 mA			12	60	mV
I_d	Quiescent current	V_I = 13 to 16 V I_O = 0 mA	ON mode		0.7	1.5	mA
		V_I = 13.3 to 16 V I_O = 500 mA				12	
		V_I = 13 V	OFF mode		70	140	µA
SVR	Supply voltage rejection	I_O = 5 mA V_I = 14 ± 1 V	f = 120 Hz		69		dB
			f = 1 kHz		64		
			f = 10 kHz		54		
eN	Output noise voltage	B = 10 Hz to 100 kHz			50		µV
V_d	Dropout voltage	I_O = 200 mA			0.2	0.35	V
		I_O = 500 mA			0.4	0.7	
V_{IL}	Control input logic low	T_a = -40 to 125 °C				0.8	V
V_{IH}	Control input logic high	T_a = -40 to 125 °C		2			V
I_I	Control input current	V_I = 13 V V_C = 6 V			10		µA
C_O	Output bypass capacitance	ESR = 0.1 to 10 Ω I_O = 0 to 500 mA		2	10		µF

Refer to test circuits, T_J = 25 °C, C_I = 0.1 µF, C_O = 2.2 µF unless otherwise specified.

Table 29: LF120C electrical characteristics

Symbol	Parameter	Test condition		Min.	Typ.	Max.	Unit
V_O	Output voltage	I_O = 50 mA V_I = 14 V		11.76	12	12.24	V
		I_O = 50 mA V_I = 14 V T_a = -25 to 85 °C		11.52		12.48	
V_I	Operating input voltage	I_O = 500 mA				16	V
I_O	Output current limit				1		A
ΔV_O	Line regulation	V_I = 13 to 16 V I_O = 5 mA			12	60	mV
ΔV_O	Load regulation	V_I = 13.3 V I_O = 5 to 500 mA			12	60	mV
I_d	Quiescent current	V_I = 13 to 16 V I_O = 0 mA	ON mode		0.7	1.5	mA
		V_I = 13.3 to 16 V I_O = 500 mA				12	
		V_I = 13 V	OFF mode		70	140	µA
SVR	Supply voltage rejection	I_O = 5 mA V_I = 14 ± 1 V	f = 120 Hz		69		dB
			f = 1 kHz		64		
			f = 10 kHz		54		
eN	Output noise voltage	B = 10 Hz to 100 kHz			50		µV
V_d	Dropout voltage	I_O = 200 mA			0.2	0.35	V
		I_O = 500 mA			0.4	0.7	
V_{IL}	Control input logic low	T_a = -40 to 125 °C				0.8	V
V_{IH}	Control input logic high	T_a = -40 to 125 °C		2			V
I_I	Control input current	V_I = 13 V V_C = 6 V			10		µA
C_O	Output bypass capacitance	ESR = 0.1 to 10 Ω I_O = 0 to 500 mA		2	10		µF

5 Typical performance characteristics

Figure 4: Dropout voltage vs output current

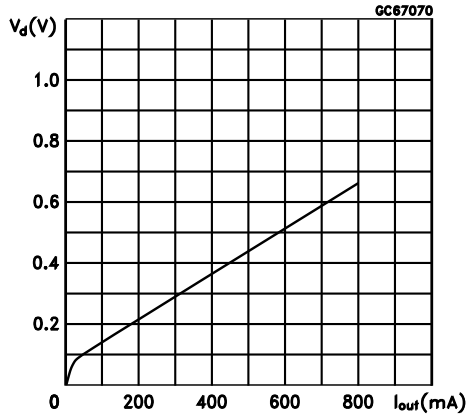

AMG260420171103MT

Figure 5: Dropout voltage vs temperature

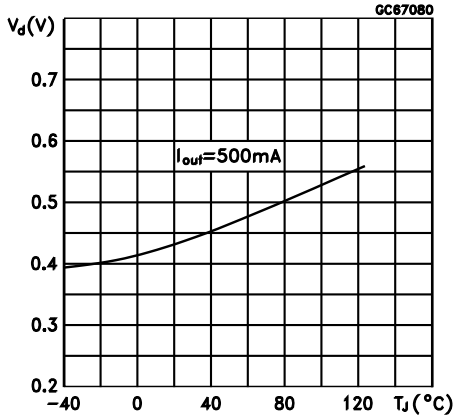

AMG260420171104MT

Figure 6: Supply current vs input voltage

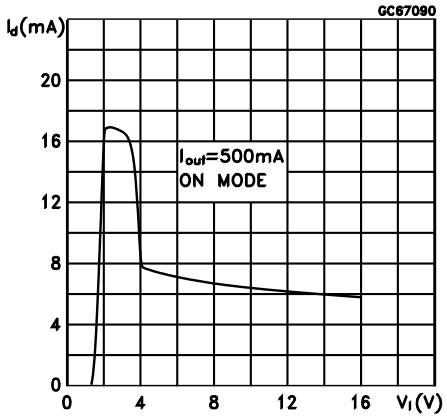

AMG260420171105MT

Figure 7: Supply current vs input voltage (no load)

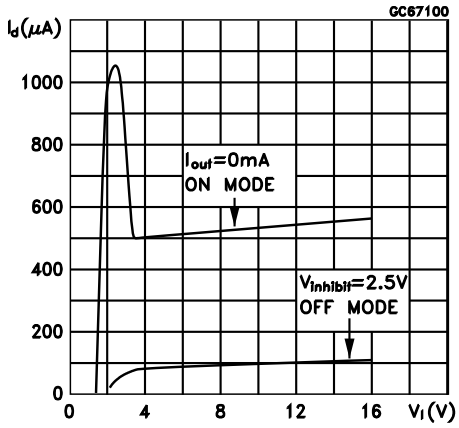

AMG260420171106MT

Figure 8: Short-circuit current vs input voltage

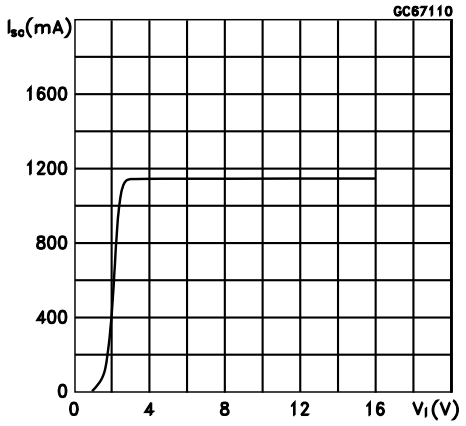

AMG260420171107MT

Figure 9: Supply current vs temperature

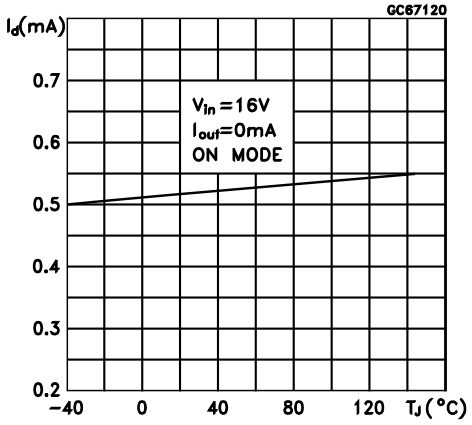

AMG260420171108MT

Unless otherwise specified $V_{O(NOM)}$ = 3.3 V.

Figure 10: Logic-controlled precision 3.3/5.0 V selectable output

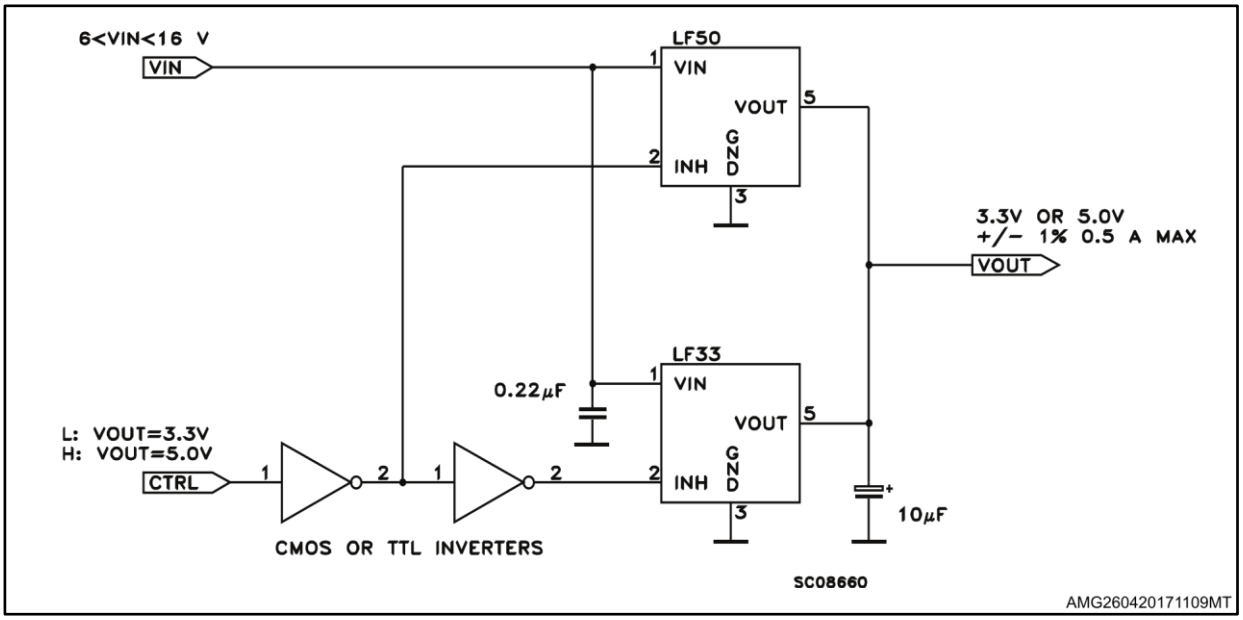

Figure 11: Sequential multi-output supply

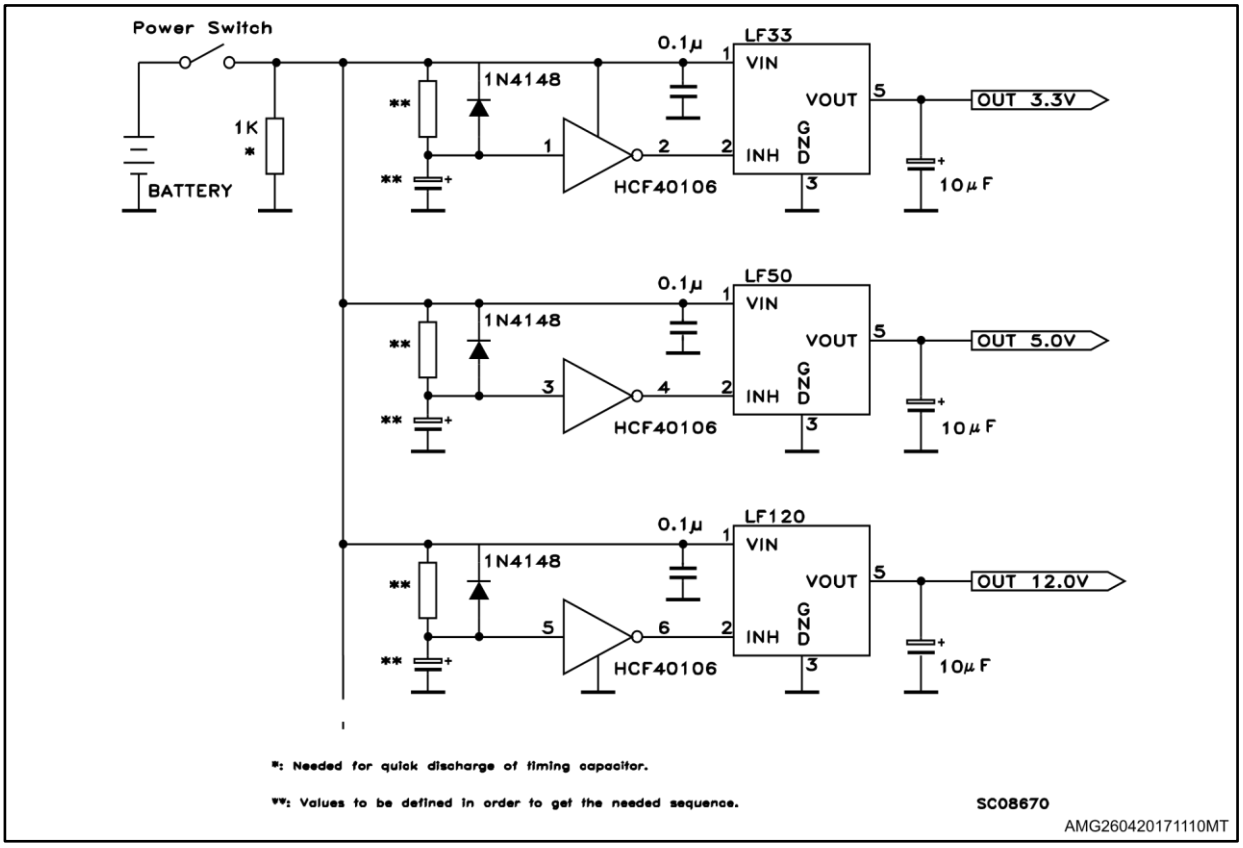

Figure 12: Multiple supply with ON/OFF toggle switch

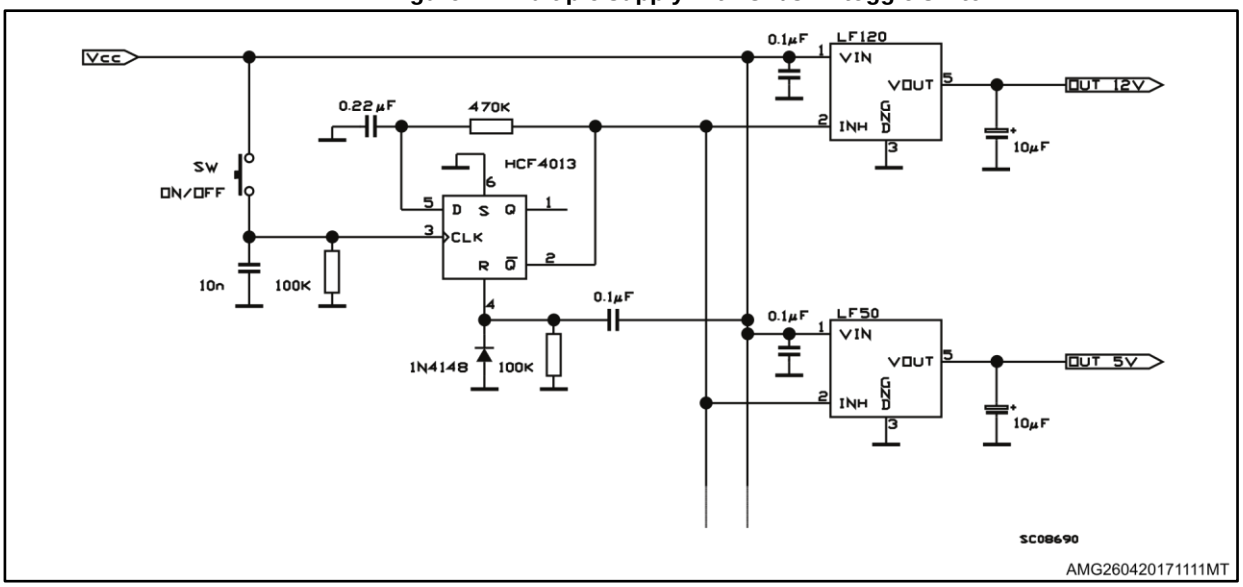

Figure 13: Basic inhibit functions

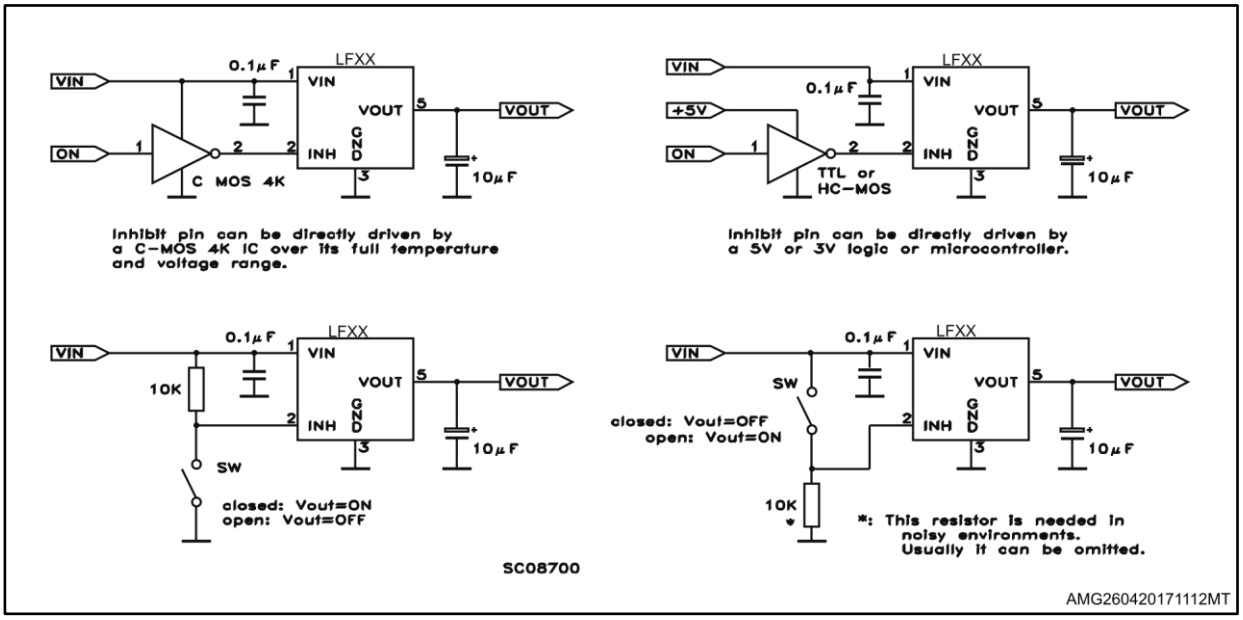

Figure 14: Delayed turn-on

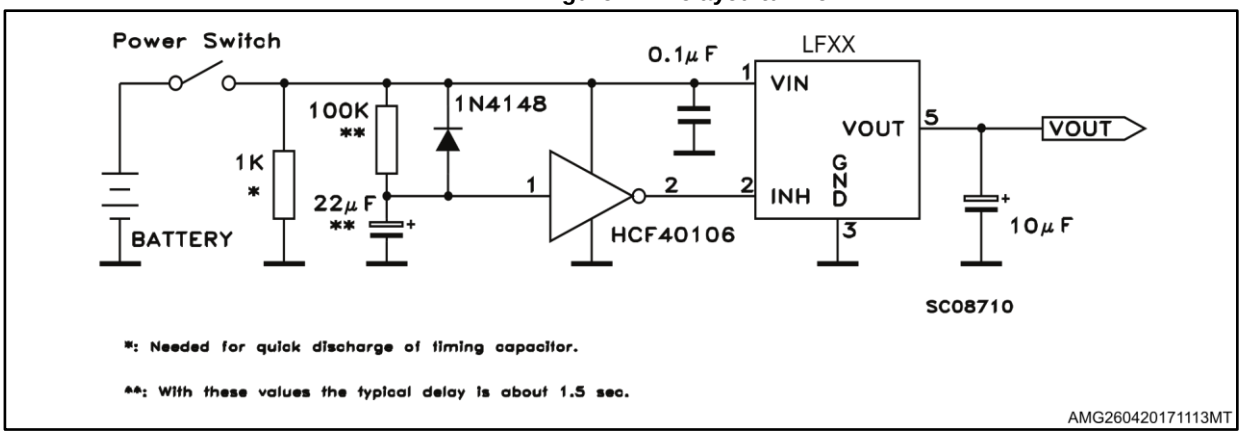

Figure 15: Low voltage bulb blinker

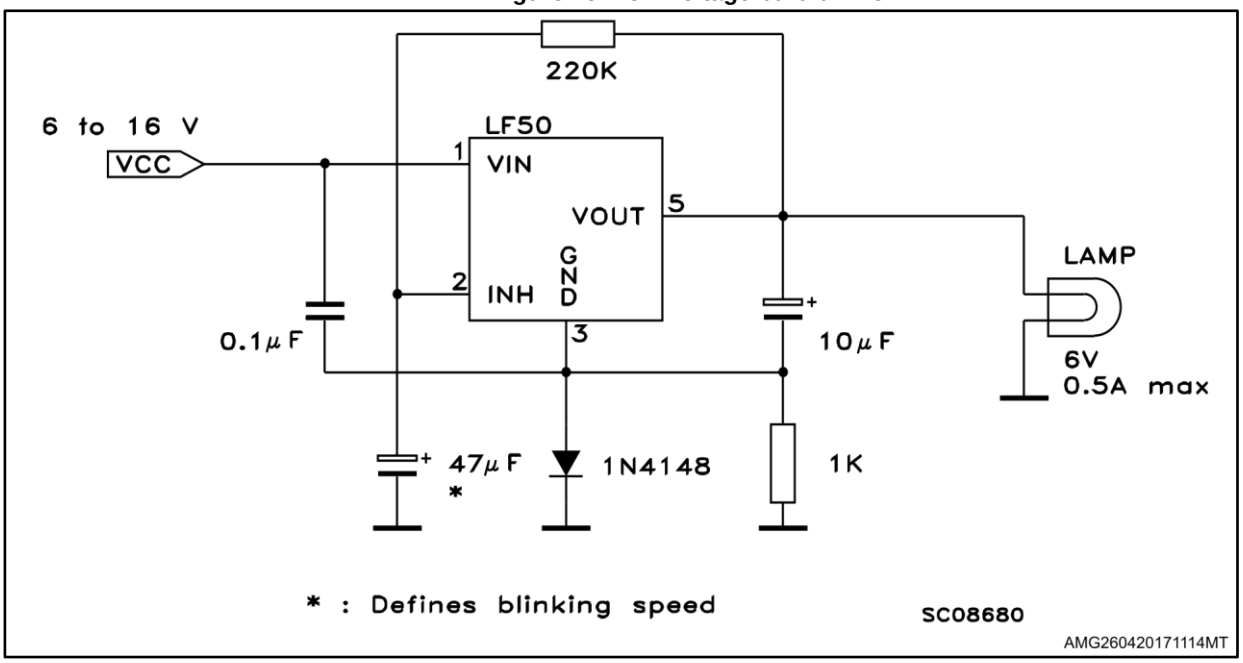

6 Package information

In order to meet environmental requirements, ST offers these devices in different grades of ECOPACK® packages, depending on their level of environmental compliance. ECOPACK® specifications, grade definitions and product status are available at: ***www.st.com***. ECOPACK® is an ST trademark.

6.1 TO-220 (dual gauge) package information

Figure 16: TO-220 (dual gauge) package outline

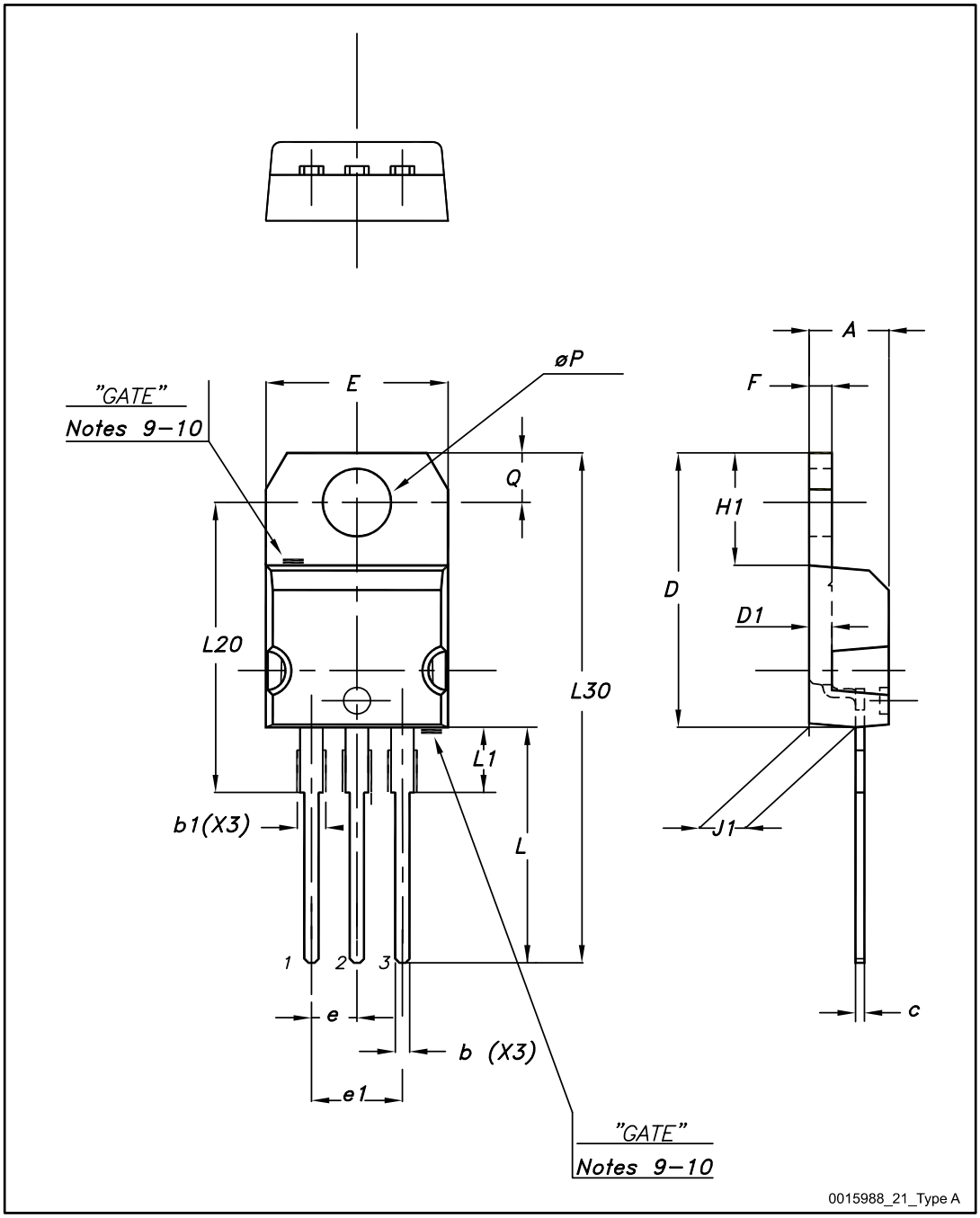

Table 30: TO-220 (dual gauge) mechanical data

Dim.	mm		
	Min.	Typ.	Max.
A	4.40		4.60
b	0.61		0.88
b1	1.14		1.70
c	0.48		0.70
D	15.25		15.75
D1		1.27	
E	10		10.40
e	2.40		2.70
e1	4.95		5.15
F	1.23		1.32
H1	6.20		6.60
J1	2.40		2.72
L	13		14
L1	3.50		3.93
L20		16.40	
L30		28.90	
ØP	3.75		3.85
Q	2.65		2.95

6.2 TO-220 (single gauge) package information

Figure 17: TO-220 (single gauge) package outline

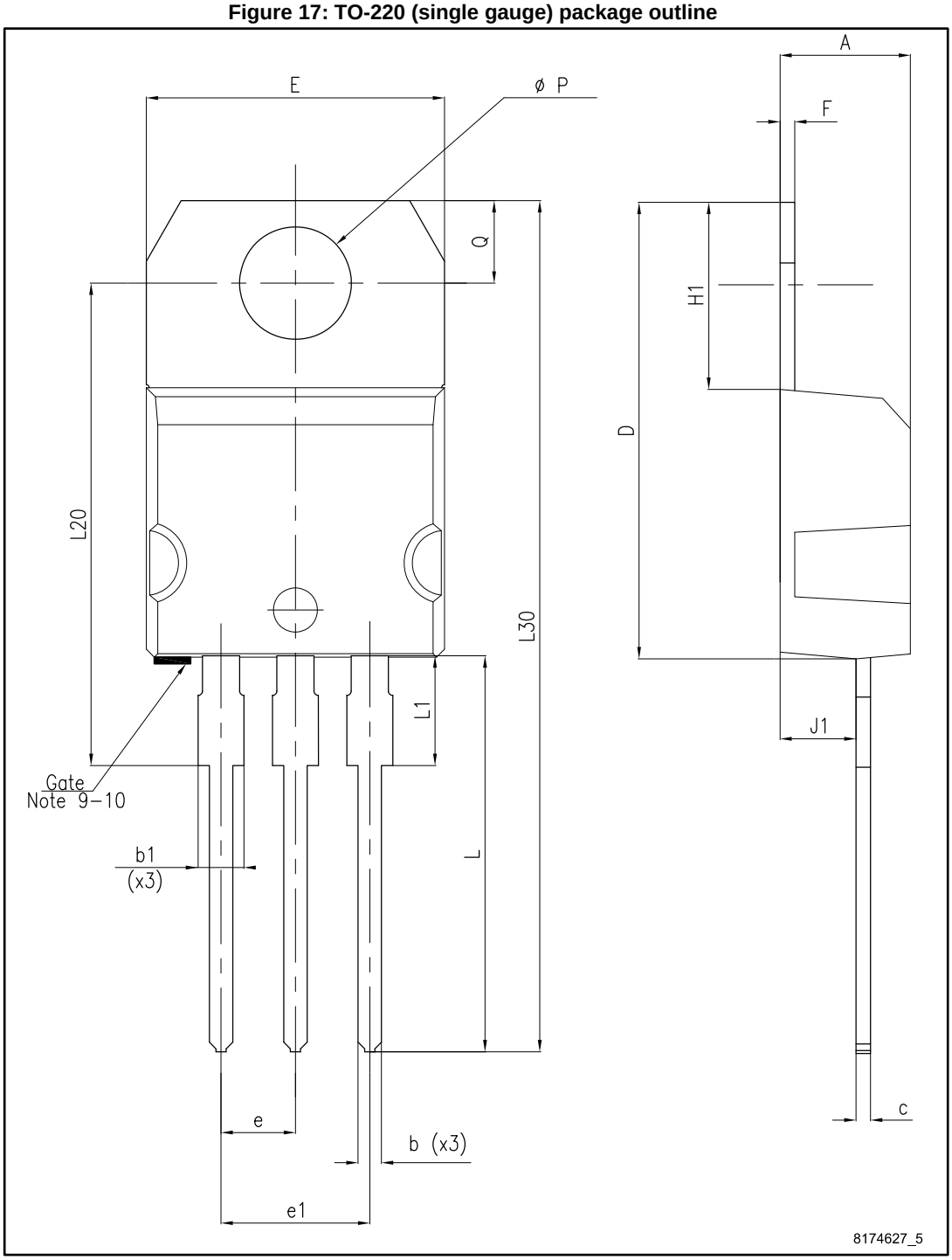

Table 31: TO-220 (single gauge) mechanical data

Dim.	mm		
	Min.	Typ.	Max.
A	4.40		4.60
b	0.61		0.88
b1	1.14		1.70
c	0.48		0.70
D	15.25		15.75
E	10.00		10.40
e	2.40		2.70
e1	4.95		5.15
F	0.51		0.60
H1	6.20		6.60
J1	2.40		2.72
L	13.00		14.00
L1	3.50		3.93
L20		16.40	
L30		28.90	
ØP	3.75		3.85
Q	2.65		2.95

6.3 TO-220FP package information

Figure 18: TO-220FP package outline

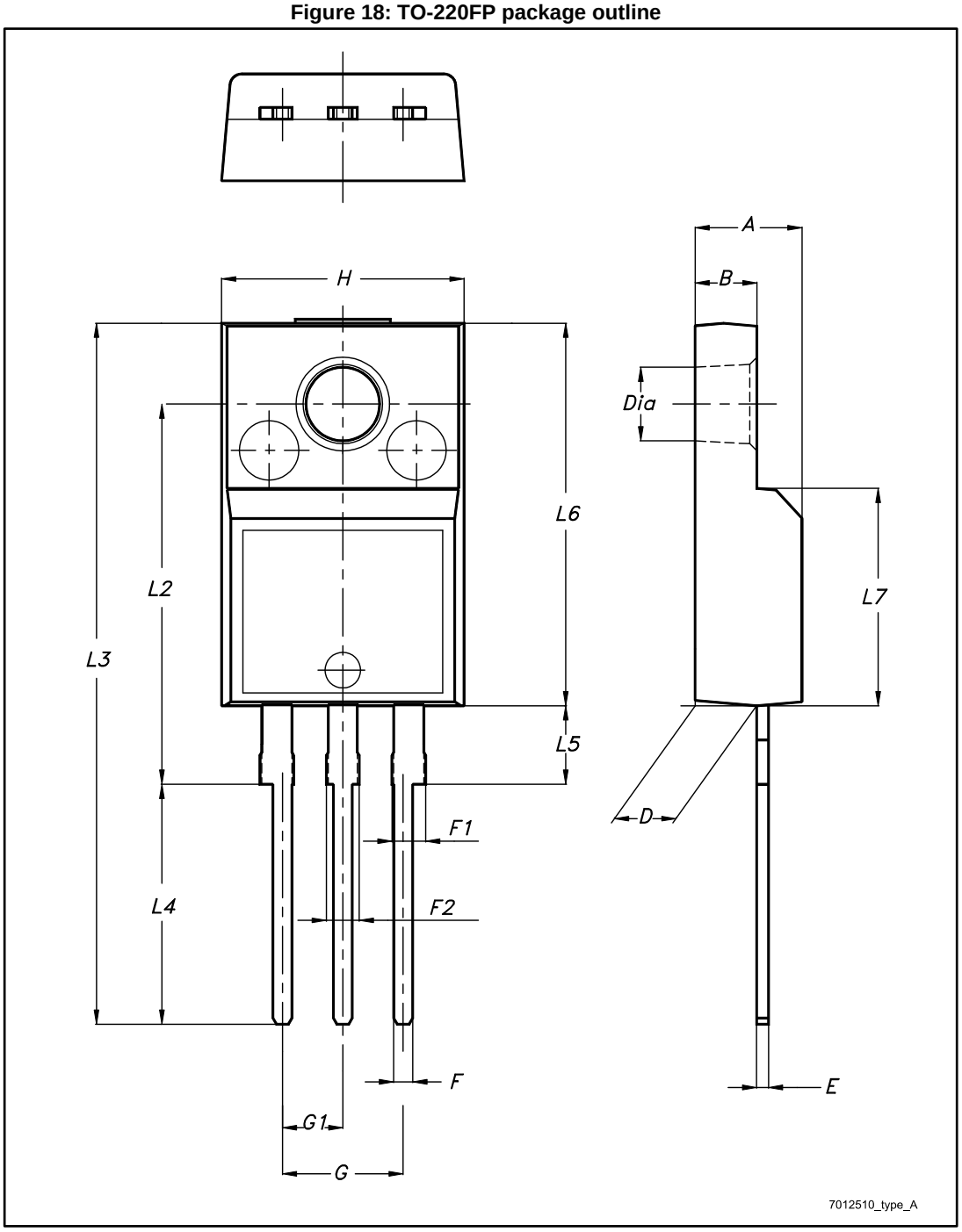

Table 32: TO-220FP package mechanical data

Dim.	mm		
	Min.	Typ.	Max.
A	4.4		4.6
B	2.5		2.7
D	2.5		2.75
E	0.45		0.7
F	0.75		1
F1	1.15		1.70
F2	1.15		1.70
G	4.95		5.2
G1	2.4		2.7
H	10		10.4
L2		16	
L3	28.6		30.6
L4	9.8		10.6
L5	2.9		3.6
L6	15.9		16.4
L7	9		9.3
Dia	3		3.2

6.4 TO-220 packing information

Figure 19: Tube for TO-220 (dual gauge) (mm.)

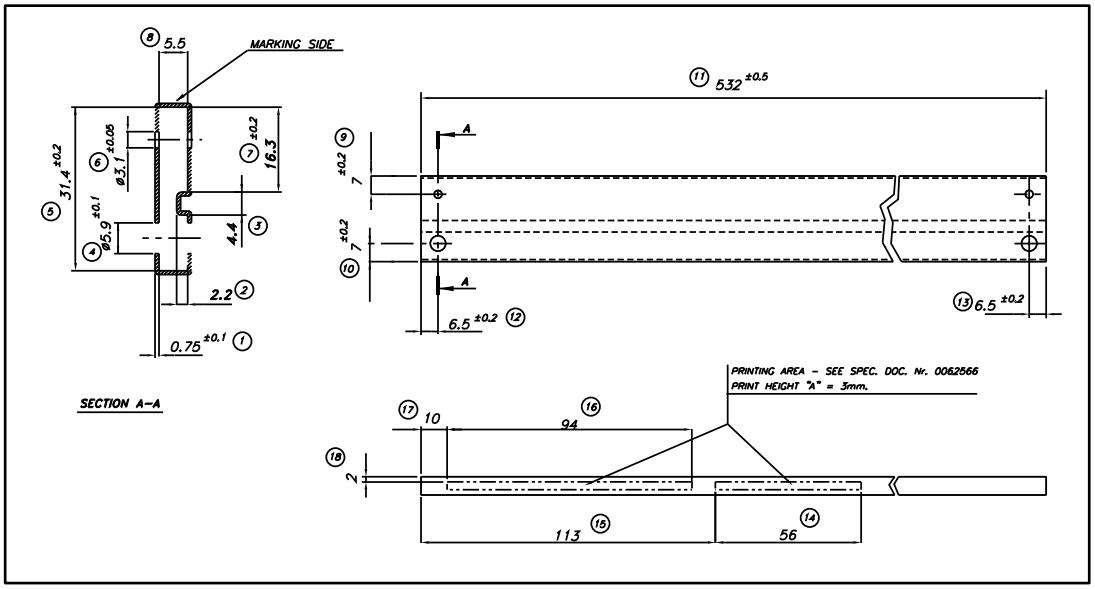

Figure 20: Tube for TO-220 (single gauge) (mm.)

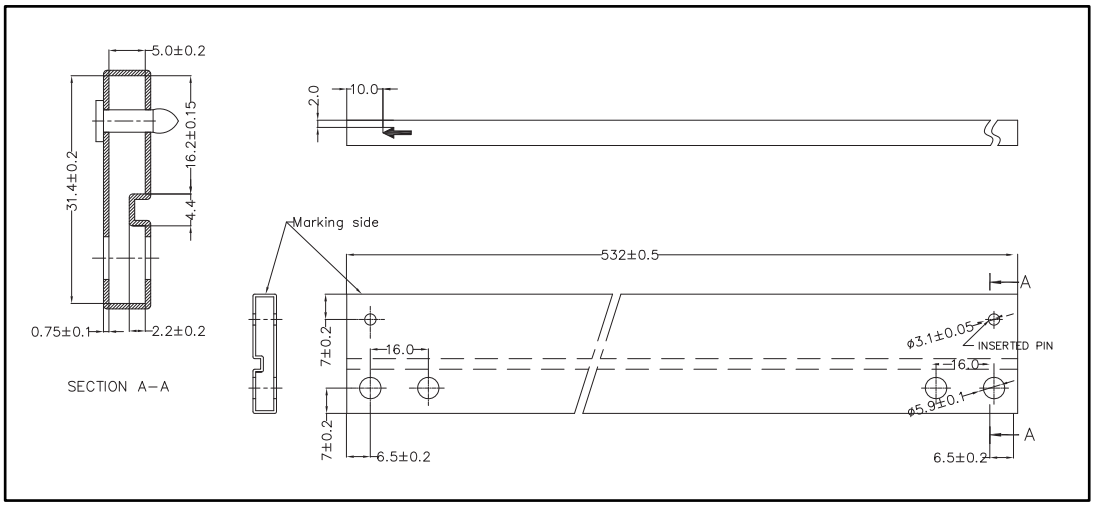

6.5 DPAK package information

Figure 21: DPAK package outline

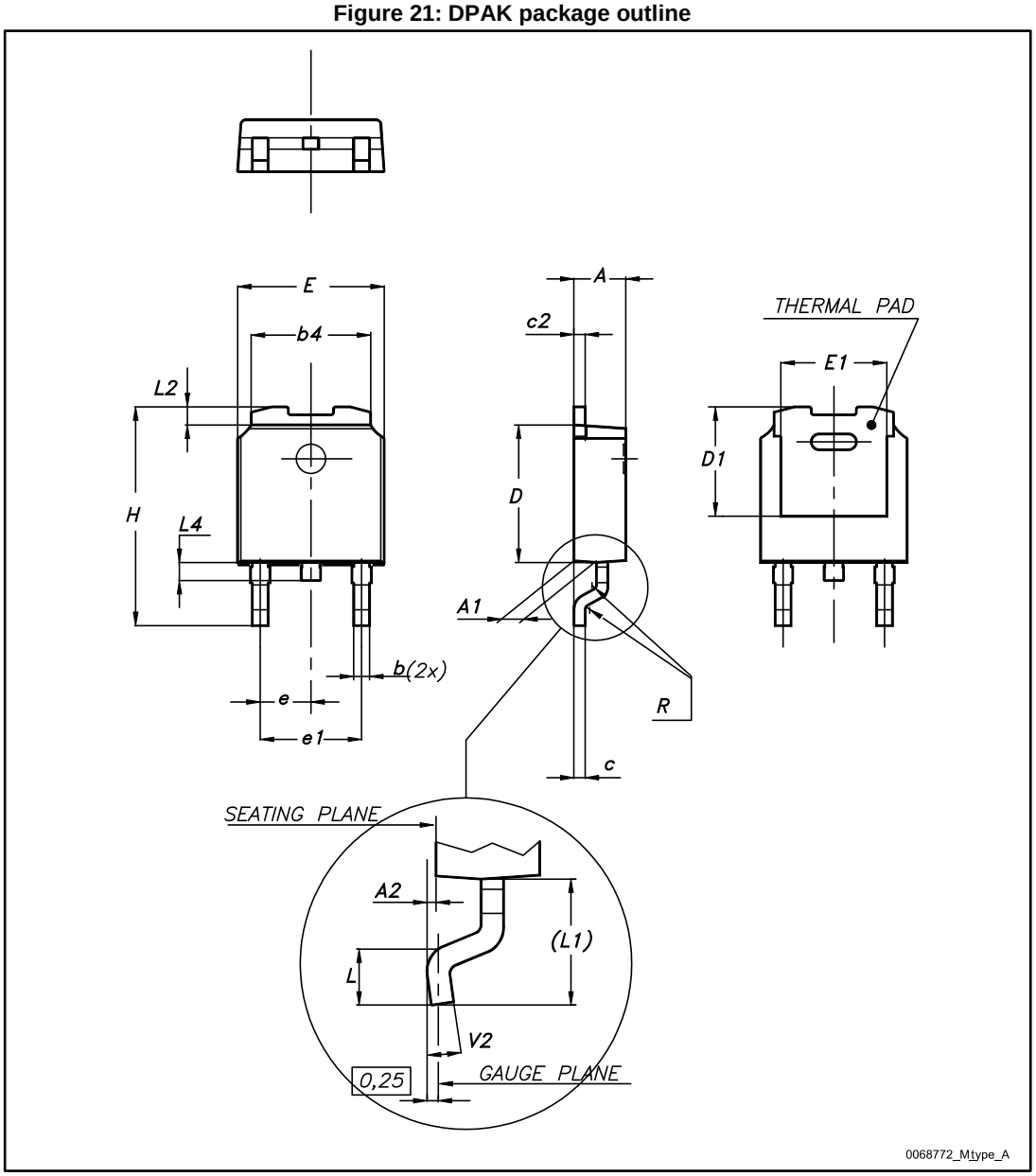

Table 33: DPAK mechanical data

Dim.	mm		
	Min.	Typ.	Max.
A	2.20		2.40
A1	0.90		1.10
A2	0.03		0.23
b	0.64		0.90
b4	5.20		5.40
c	0.45		0.60
c2	0.48		0.60
D	6.00		6.20
D1		5.10	
E	6.40		6.60
E1		4.70	
e		2.28	
e1	4.40		4.60
H	9.35		10.10
L	1.00		1.50
(L1)		2.80	
L2		0.80	
L4	0.60		1.00
R		0.20	
V2	0°		8°

Figure 22: DPAK recommended footprint (dimensions are in mm)

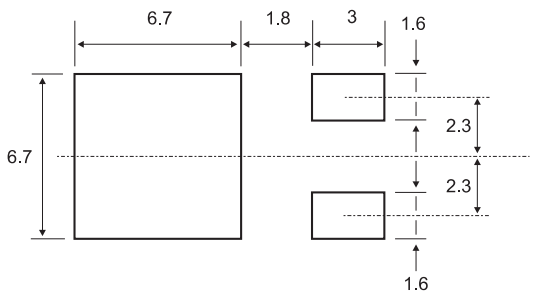

6.6 PPAK package information

Figure 23: PPAK package outline

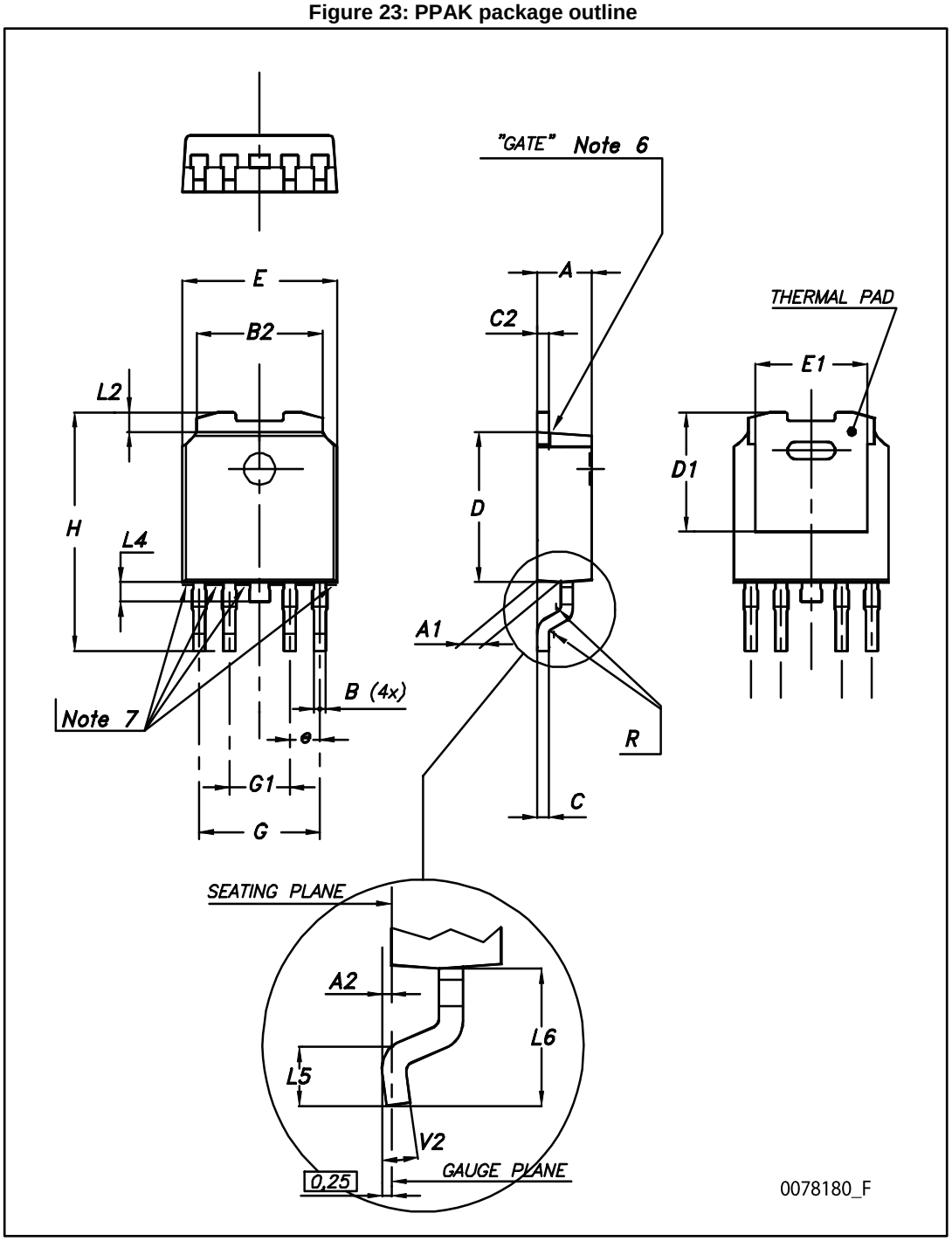

Table 34: PPAK mechanical data

Dim.	mm		
	Min.	Typ.	Max.
A	2.2		2.4
A1	0.9		1.1
A2	0.03		0.23
B	0.4		0.6
B2	5.2		5.4
C	0.45		0.6
C2	0.48		0.6
D	6		6.2
D1		5.1	
E	6.4		6.6
E1		4.7	
e		1.27	
G	4.9		5.25
G1	2.38		2.7
H	9.35		10.1
L2		0.8	1
L4	0.6		1
L5	1		
L6		2.8	
R		0.20	
V2	0°		8°

6.7 PPAK and DPAK packing information

Figure 24: PPAK and DPAK tape

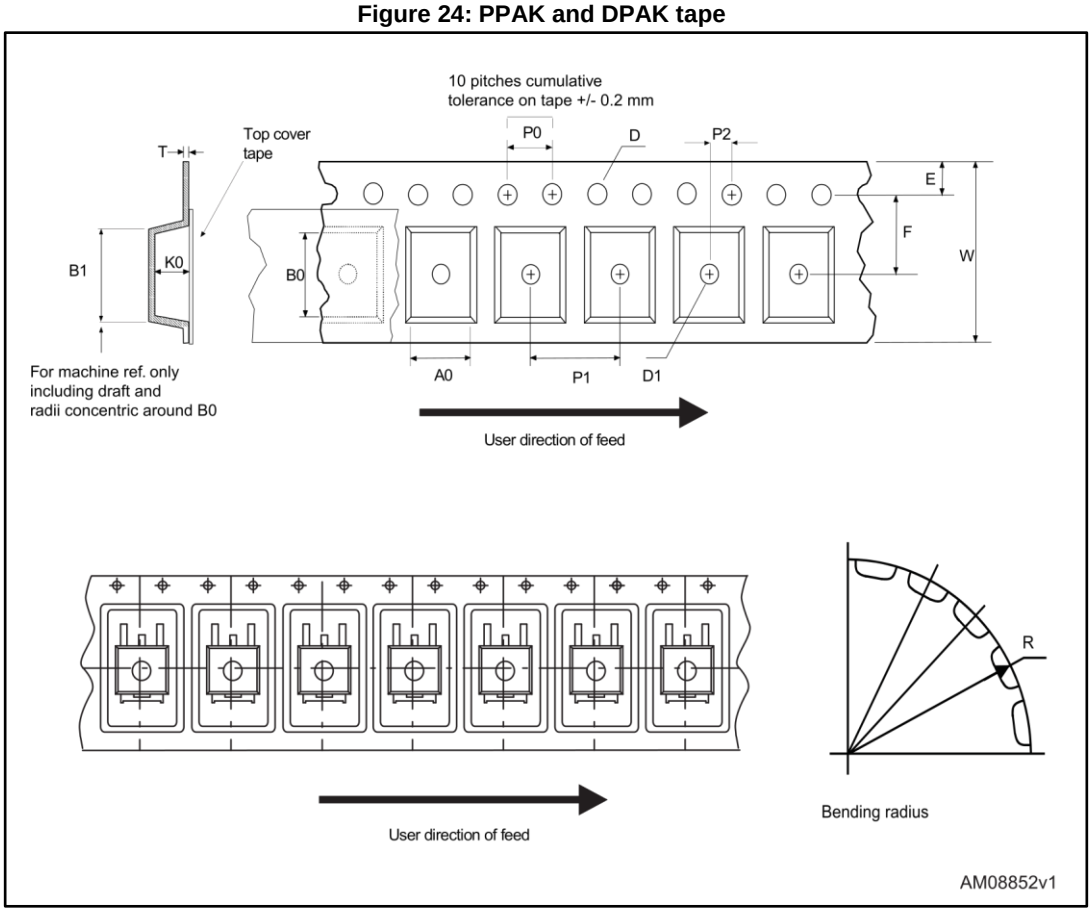

Figure 25: PPAK and DPAK reel

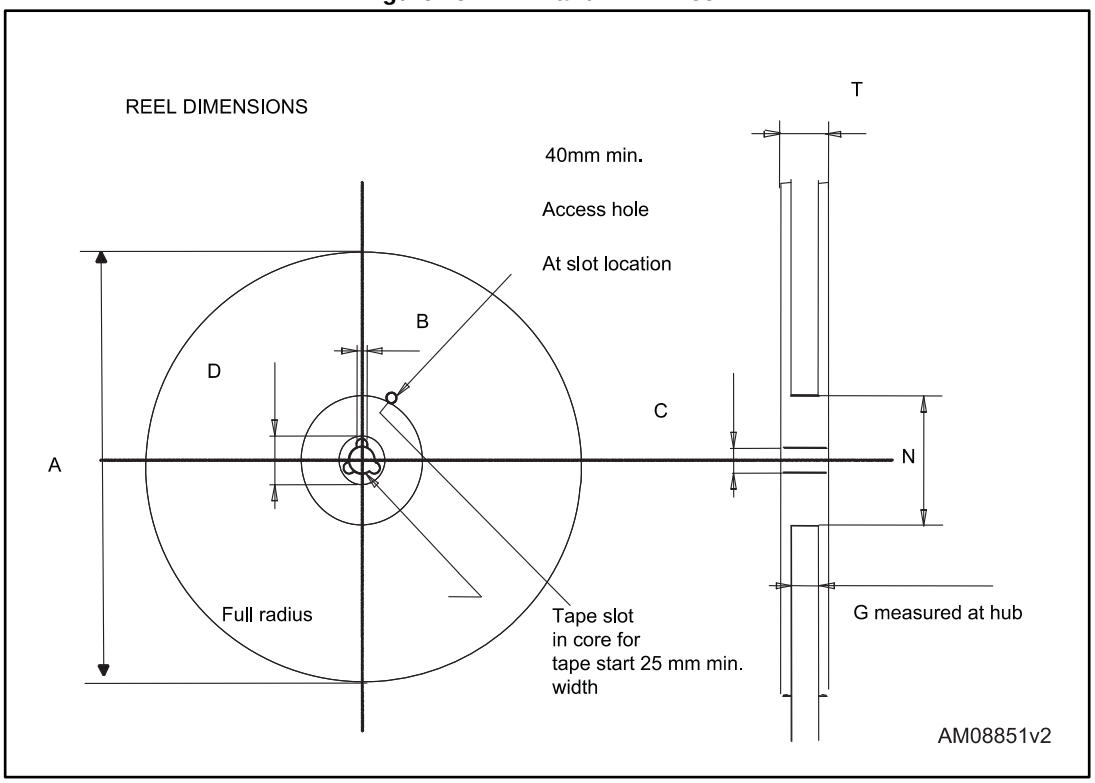

Table 35: PPAK and DPAK tape and reel mechanical data

Tape			Reel		
Dim.	mm		Dim.	mm	
	Min.	Max.		Min.	Max.
A0	6.8	7	A		330
B0	10.4	10.6	B	1.5	
B1		12.1	C	12.8	13.2
D	1.5	1.6	D	20.2	
D1	1.5		G	16.4	18.4
E	1.65	1.85	N	50	
F	7.4	7.6	T		22.4
K0	2.55	2.75			
P0	3.9	4.1	Base qty.		2500
P1	7.9	8.1	Bulk qty.		2500
P2	1.9	2.1			
R	40				
T	0.25	0.35			
W	15.7	16.3			

7 Ordering information

Table 36: Order code

Package					Output voltage (V)
TO-220	TO-220 (dual gauge)	TO-220FP	DPAK (tape and reel)	PPAK (tape and reel)	
			LF15ABDT-TR		1.5
			LF18CDT-TR	LF18CPT-TR	1.8
			LF18CDT-TRY (1)		1.8
			LF18ABDT-TR	LF18ABPT-TR	1.8
			LF25CDT-TR	LF25CPT-TR	2.5
			LF25CDT-TRY(1)		2.5
			LF25ABDT-TR		2.5
			LF25ABDT-TRY(1)		2.5
LF33CV	LF33CV-DG		LF33CDT-TR	LF33CPT-TR	3.3
			LF33CDT-TRY(1)	LF33CPT-TRY(1)	3.3
LF33ABV	LF33ABV-DG		LF33ABDT-TR		3.3
LF50CV	LF50CV-DG		LF50CDT-TR	LF50CPT-TR	5
			LF50CDT-TRY(1)	LF50CPT-TRY(1)	5
LF50ABV	LF50ABV-DG		LF50ABDT-TR	LF50ABPT-TR	5
		LF50ACP			5
			LF50ABDT-TRY(1)		5
LF60CV			LF60CDT-TR		6
LF60ABV			LF60ABDT-TR		6
			LF80CDT-TR		8
			LF80CDT-TRY(1)		8
			LF80ABDT-TR		8
			LF85CDT-TR	LF85CPT-TR	8.5
			LF85CDT-TRY(1)	LF85CPT-TRY(1)	8.5
LF90CV				LF90CPT-TR	9
			LF120CDT-TR		12
			LF120ABDT-TR		12

Notes:

(1)Qualified and characterized according to AEC Q100 and Q003 or equivalent, advanced screening according to AEC Q001 and Q002 or equivalent.

8 Revision history

Table 37: Document revision history

Date	Revision	Changes
21-Jun-2004	14	Document updating.
24-May-2006	15	Order codes updated.
02-Apr-2007	16	Order codes updated.
14-May-2007	17	Order codes updated.
26-Jul-2007	18	Add table 1 in cover page.
26-Nov-2007	19	Modified: Table 34.
16-Jan-2008	20	Added new order codes for automotive grade products see Table 34 on page 51.
12-Feb-2008	21	Modified: Table 34 on page 51.
10-Jul-2008	22	Modified: Table 34 on page 51.
05-May-2010	23	Added: Table 29 on page 41, fig 16, fig 17, fig 18 and fig 19.
16-Nov-2010	24	Modified: R_{thJC} value for TO-220 Table 2 on page 7.
10-Feb-2012	25	Added: order code LF33CV-DG and LF33ABV-DG Table 34 on page 51.
09-Mar-2012	26	Added: order code LF50ABV-DG Table 34 on page 51.
28-Feb-2014	27	Changed the part numbers LFxxAB and LFxxC to LFXX. Changed the title. Removed table from cover page. Removed PENTAWATT package from the figure in cover page, the Description and Figure 2. Updated the Description. Updated: Table 2, Table 6, Table 8, Table 10, Table 13, Table 15, Table 17, Table 22, Table 25 and Table 34. Changed title of Figure 7. Updated mechanical data.
03-Mar-2015	28	Updated Table 34: Order code. Minor text changes.
19-Jan-2017	29	Updated output voltage values in Table 16 and added new commercial type in TO-220FP in Table 35. Minor text changes.
27-Jan-2017	30	Updated features in cover page. Added Table 14 and updated Table 35.
22-May-2017	31	Updated *Table 36: "Order code"*. Minor text changes.

IMPORTANT NOTICE – PLEASE READ CAREFULLY

STMicroelectronics NV and its subsidiaries ("ST") reserve the right to make changes, corrections, enhancements, modifications, and improvements to ST products and/or to this document at any time without notice. Purchasers should obtain the latest relevant information on ST products before placing orders. ST products are sold pursuant to ST's terms and conditions of sale in place at the time of order acknowledgement.

Purchasers are solely responsible for the choice, selection, and use of ST products and ST assumes no liability for application assistance or the design of Purchasers' products.

No license, express or implied, to any intellectual property right is granted by ST herein.

Resale of ST products with provisions different from the information set forth herein shall void any warranty granted by ST for such product.

ST and the ST logo are trademarks of ST. All other product or service names are the property of their respective owners.

Information in this document supersedes and replaces information previously supplied in any prior versions of this document.

© 2017 STMicroelectronics – All rights reserved