SPECIFICATION
MATERIAL
Features

⑦ This shell hood is supplied for top cable entry.

Following versions are available:

metallized,black and grey

The strain relief with two screws is attached separately.

Order Code

AGP - XX - G - X
1 2

1 **No. of contacts**
09, 15, 25, 37, 50

2 **Version**
ME -Metallized
NEW -Plastic,black
NEW/GR -Plastic,Grey

Suitable knurled screws
AGP-RS/NEW
1 Set=2 pieces

⑤ **Material**
Insulator: ABS UL94HB
Screw: Steel
Finish: Chromate plated
Delivery includes
2 half-sheels
2 fixing screws
4 screws
2 strain relief bow
2 nuts

RoHS compliant
Unit: mm

Scale	Free
TOLERANCE	
X.X	±X
X.XX	±X
X.XXX	±X
DIM	TOL
X.°	±X°
X.X°	±X°
Angle	TOL

Id.	Modification	Date	Name
⑧	Update dimension for 9&25 pins	26.11.2021	Daniel
⑦	Update spec description	06.05.2019	Xavier
⑥	Update the drawing	29.07.2015	Amy
⑤	Corrected material	14.12.10	Dean
④	Drawing revised	06.07.07	N.Schulz
③	Value E completed	03.08.05	Walter

	Date	Name
Drawn	12.01.2005	Ken
Approved	26.11.2021	Daniel

ASSMANN WSW components

Customer-No.

ASSMANN WSW-No. AGP xx G-x

Drawing-No. ASS 0557 CO

rev08

Replace

Sheet 1 / 6

SV3931

sales@prom-elec.com / ООО ПРОМЭЛЕКТРОНИКА

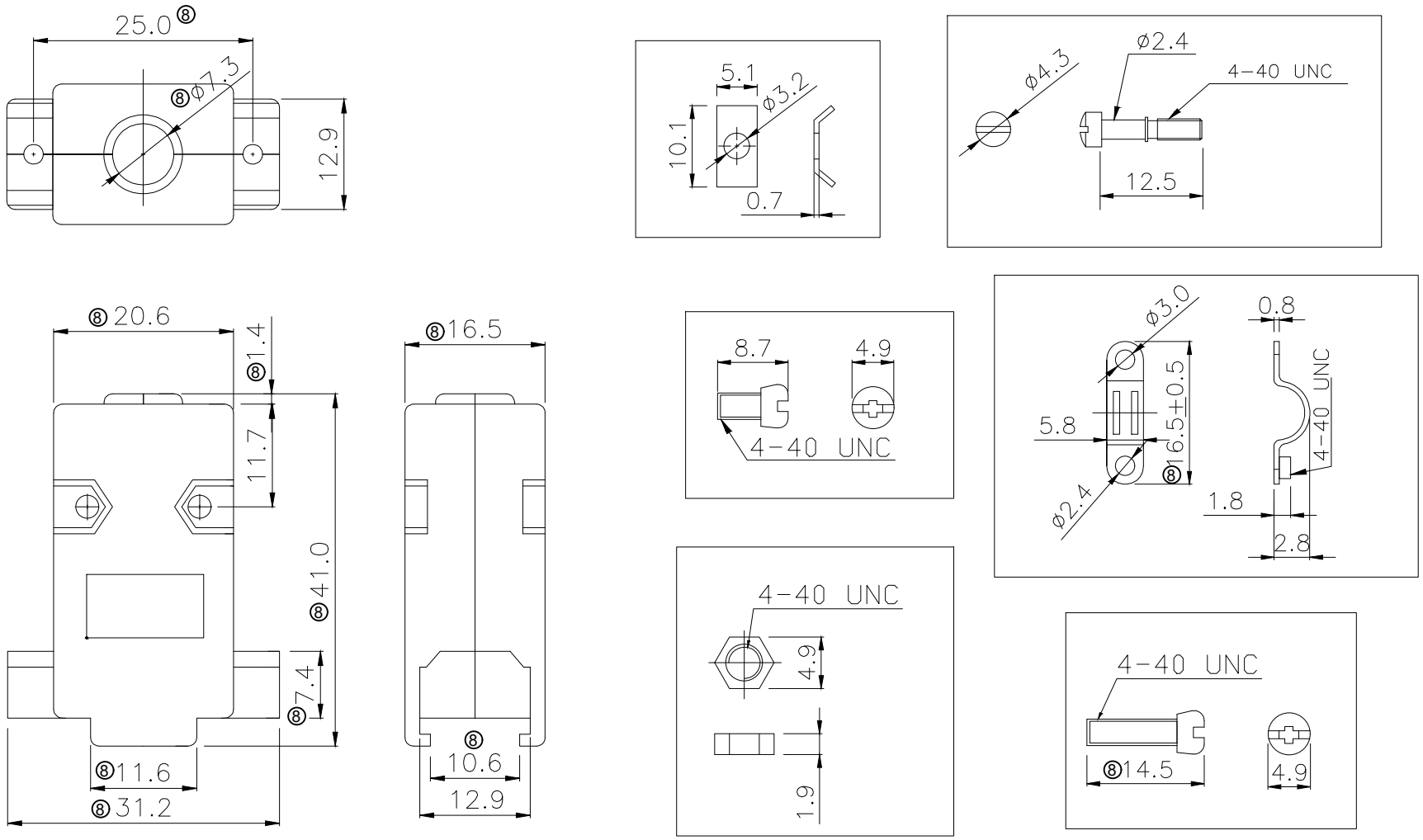

RoHS compliant

Unit: mm

Scale	Free
TOLERANCE	
X.X	±0.30
X.XX	±0.20
DIM	TOL
Angle	±5°
Angle	TOL

Id.	Modification	Date	Name
⑧	Update dimension for 9&25 pins	26.11.2021	Daniel
⑦	Update spec description	06.05.2019	Xavier
⑥	Update the drawing	29.07.2015	Amy
⑤	Corrected material	14.12.10	Dean
④	Drawing revised	06.07.07	N.Schulz
③	Value E completed	03.08.05	Walter

	Date	Name
Drawn	12.01.2005	Ken
Approved	26.11.2021	Daniel

ASSMANN WSW components

Customer-No.

ASSMANN WSW-No. AGP 09 G-x

Drawing-No. ASS 0557 CO

rev08

Replace

Sheet 2 / 6

SV3931

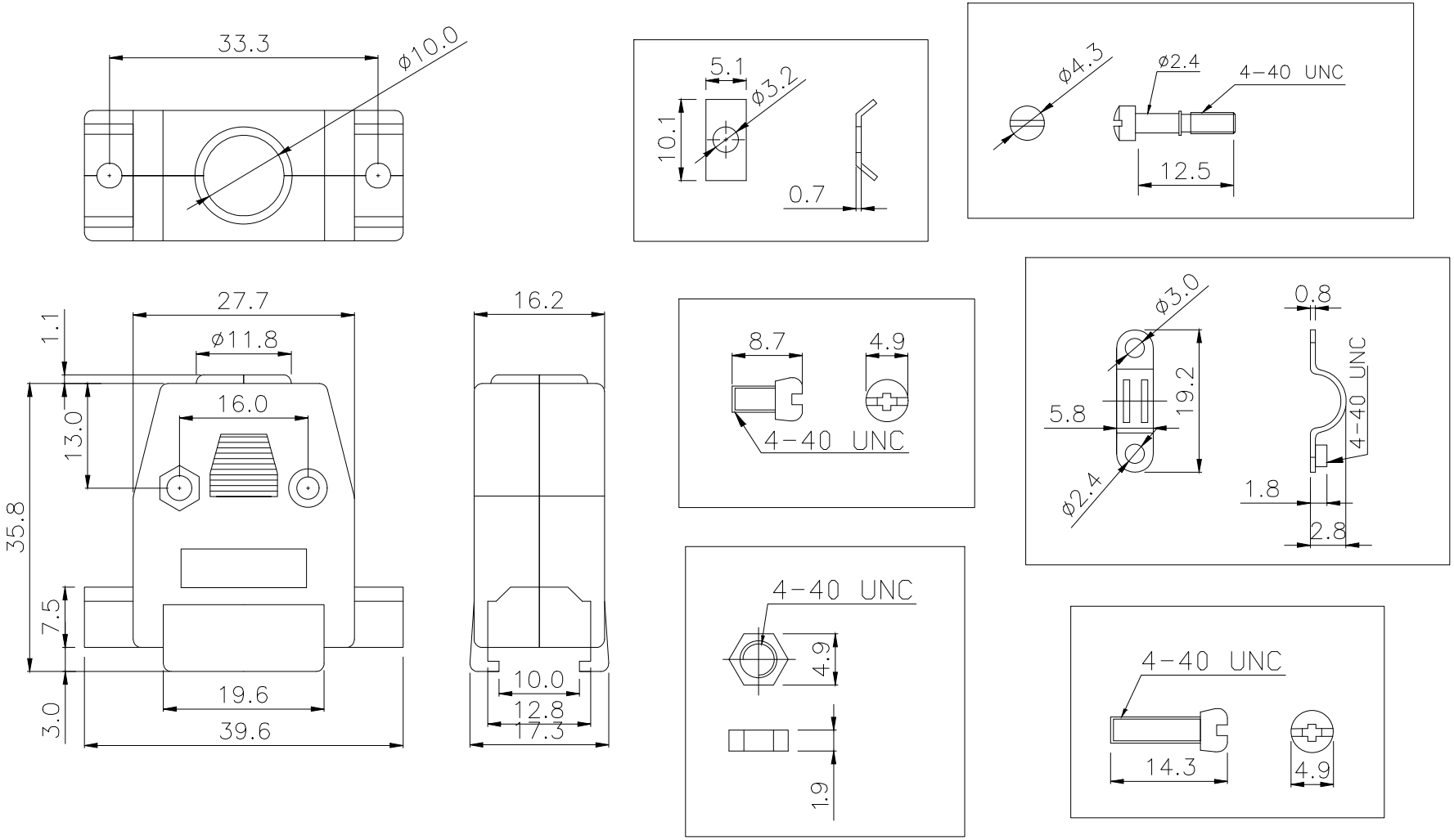

RoHS compliant

Unit: mm

Scale	Free
TOLERANCE	
X.X	±0.30
X.XX	±0.20
DIM	TOL
Angle	±5°
Angle	TOL

Id.	Modification	Date	Name
⑧	Update dimension for 9&25 pins	26.11.2021	Daniel
⑦	Update spec description	06.05.2019	Xavier
⑥	Update the drawing	29.07.2015	Amy
⑤	Corrected material	14.12.10	Dean
④	Drawing revised	06.07.07	N.Schulz
③	Value E completed	03.08.05	Walter

	Date	Name
Drawn	12.01.2005	Ken
Approved	26.11.2021	Daniel

ASSMANN WSW components

Customer-No.

ASSMANN WSW-No.

AGP 15 G-x

Drawing-No.

ASS 0557 CO

rev08

Replace

Sheet 3 / 6

SV3931

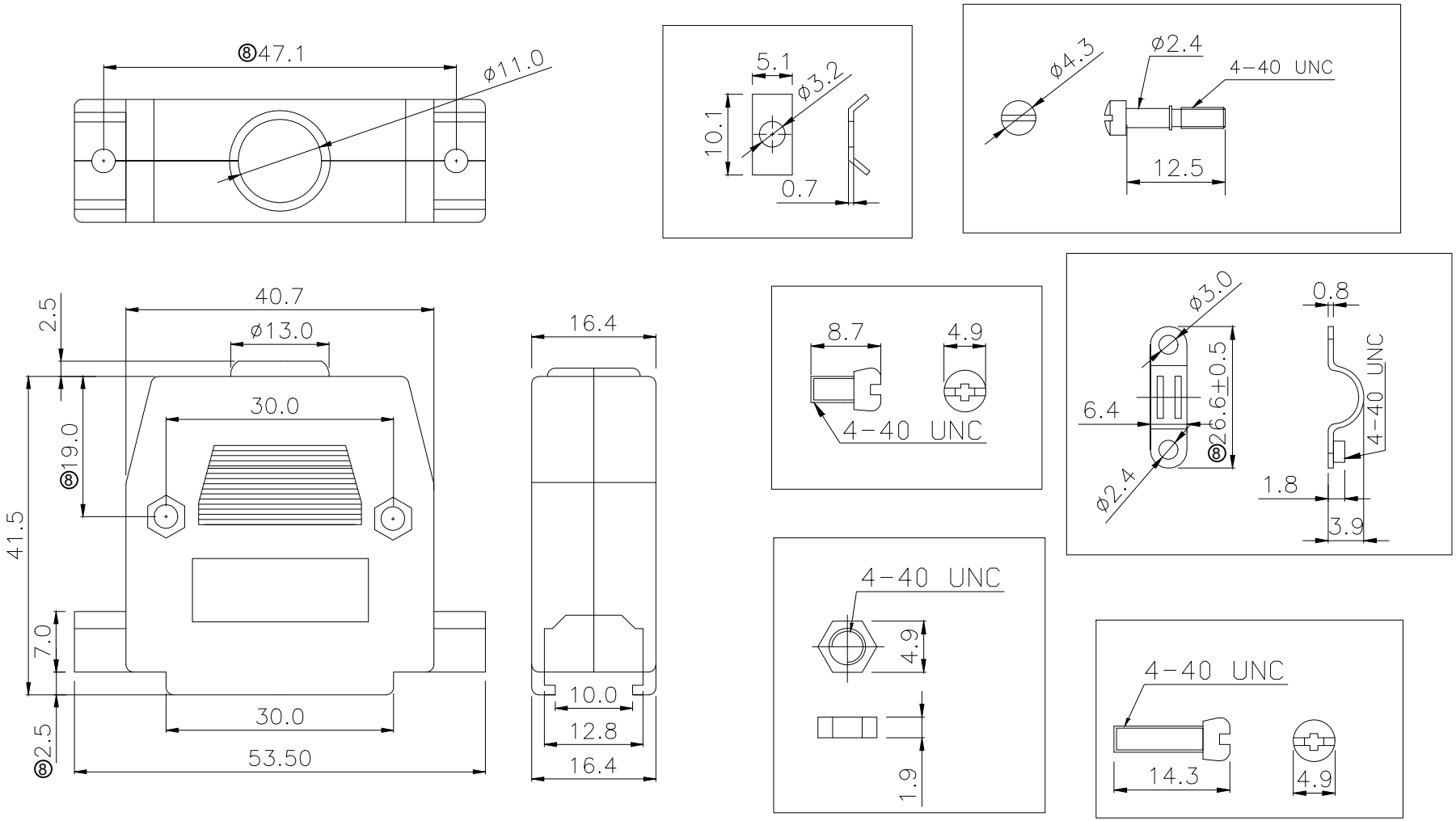

RoHS compliant
Unit: mm

Scale	Free
TOLERANCE	
X.X	±0.30
X.XX	±0.20
DIM	TOL
Angle	±5°
Angle	TOL

Id.	Modification	Date	Name
⑧	Update dimension for 9&25 pins	26.11.2021	Daniel
⑦	Update spec description	06.05.2019	Xavier
⑥	Update the drawing	29.07.2015	Amy
⑤	Corrected material	14.12.10	Dean
④	Drawing revised	06.07.07	N.Schulz
③	Value E completed	03.08.05	Walter

	Date	Name
Drawn	12.01.2005	Ken
Approved	26.11.2021	Daniel

ASSMANN WSW components

Customer-No.

ASSMANN WSW-No.
AGP 25 G-x

Drawing-No.
ASS 0557 CO

rev08

Replace

Sheet
4 / 6

SV3931

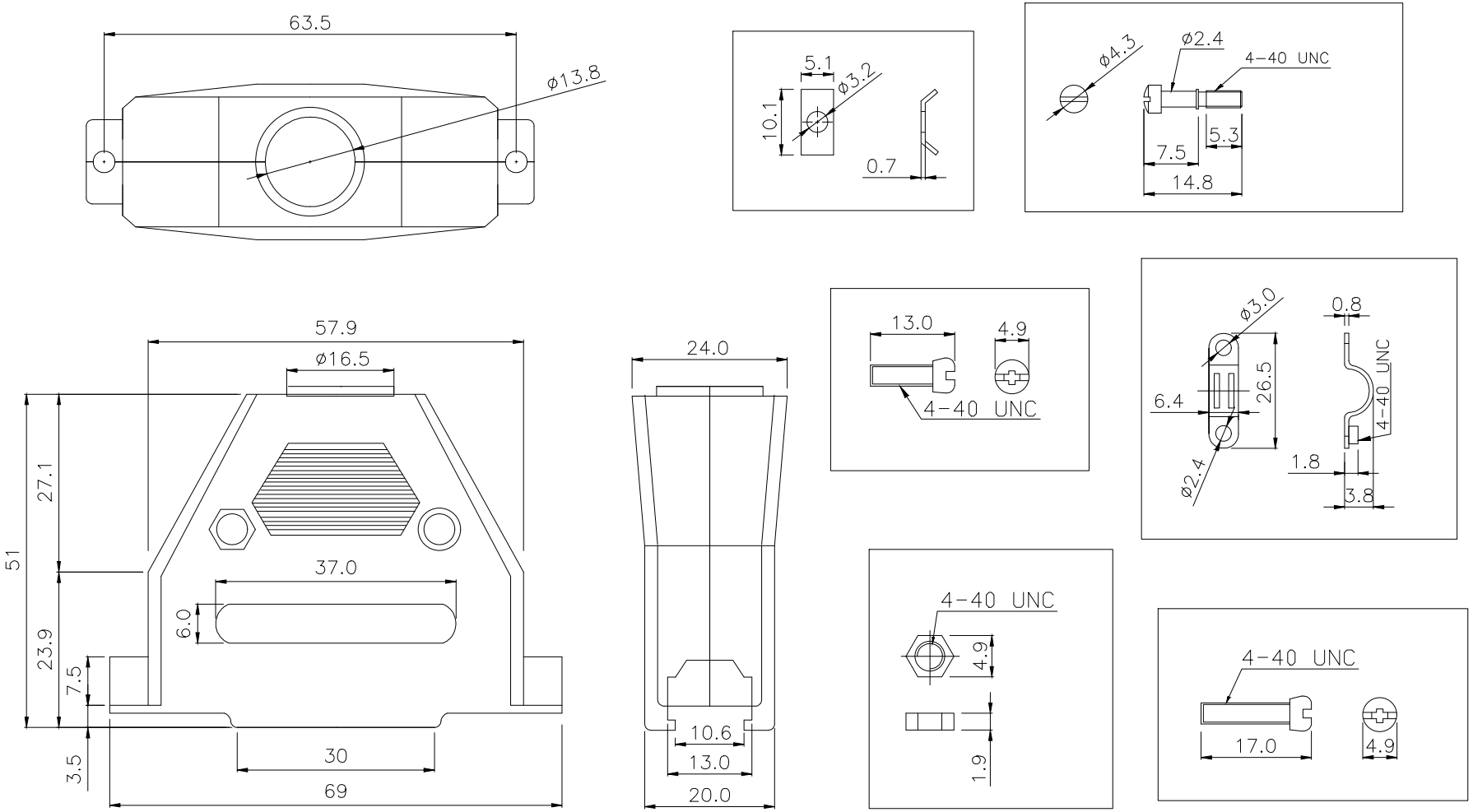

RoHS compliant

Unit: mm

Scale	Free
TOLERANCE	
X.X	±0.30
X.XX	±0.20
DIM	TOL
Angle	±5°
Angle	TOL

Id.	Modification	Date	Name
⑧	Update dimension for 9&25 pins	26.11.2021	Daniel
⑦	Update spec description	06.05.2019	Xavier
⑥	Update the drawing	29.07.2015	Amy
⑤	Corrected material	14.12.10	Dean
④	Drawing revised	06.07.07	N.Schulz
③	Value E completed	03.08.05	Walter

	Date	Name
Drawn	12.01.2005	Ken
Approved	26.11.2021	Daniel

ASSMANN WSW components

Customer-No.

ASSMANN WSW-No.

AGP 37 G-x

Drawing-No.

ASS 0557 CO

rev08

Replace

Sheet 5 / 6

SV3931

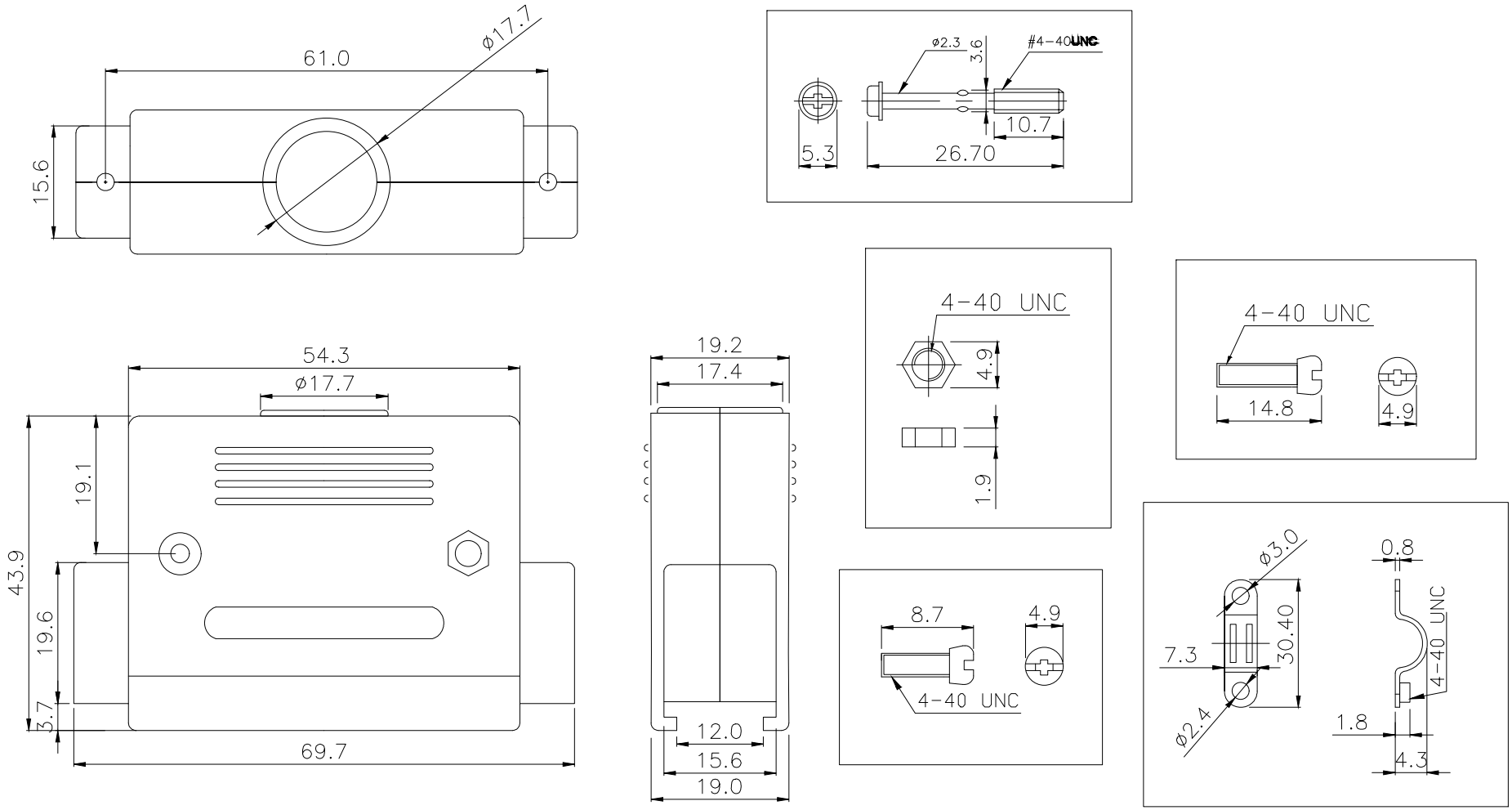

RoHS compliant
Unit: mm

Scale	Free
TOLERANCE	
X.X	±0.30
X.XX	±0.20
DIM	TOL
Angle	±5°
Angle	TOL

Id.	Modification	Date	Name
⑧	Update dimension for 9&25 pins	26.11.2021	Daniel
⑦	Update spec description	06.05.2019	Xavier
⑥	Update the drawing	29.07.2015	Amy
⑤	Corrected material	14.12.10	Dean
④	Drawing revised	06.07.07	N.Schulz
③	Value E completed	03.08.05	Walter

	Date	Name
Drawn	12.01.2005	Ken
Approved	26.11.2021	Daniel

ASSMANN WSW components

Customer-No.

ASSMANN WSW-No.
AGP 50 G-x

Drawing-No.
ASS 0557 CO

rev08

Replace

Sheet
6 / 6

SV3931