df Electric

TRANSFORMERS

LOW VOLTAGE TRANSFORMERS · AUTOTRANSFORMERS · REACTORS

TR26H

SAFETY

for swimming-pool spotlights

single-phase transformers

TR26 H

PROTECTING THE WORLD

dfelectric.es

TR26H
SAFETY
for swimming pool spotlights
single-phase transformers

TRANSFORMERS

TR26 H

TR26 H

POWER
350VA

PRI VOLTAGE
230V

SEC VOLTAGE
12V

STANDARDS
IEC/EN 61558-1
IEC/EN 61558-2-6

TR26H SAFETY
for swimming pool spotlights
Single-phase transformers

TR26H transformer it is a single-phase safety transformer for the supply of spotlights in swimming-pools, Spas, gardens and moisture locations where, due to safety reasons it is necessary to use safety extra low voltage (SELV). The main characteristic is the reduced height that allows the installation in a low profile boxes.

It has several taps in primary winding marked in meters in order to compensate the voltage drop in the transformer-spotlight line conductors and thus to get an adequate brightness in every spotlight.

It is manufactured with electrostatic screen (class I) and sized for continuous service at 100% of power in an ambient temperature up to 40°C.

Easy and fast connections due to the high capacity clamp type terminal blocks, accessible without remove any cover.

On request DF can manufacture transformers with other voltages, with class II protection, with other distances between transformer and spotlight, etc.

Range

POWER (VA)	FOR SPOTLIGHT	DISTANCES TRANSFORMER SPOTLIGHT	REFERENCE
350	1x12V 300W	8-18-25m 6 mm² wire size 10-25-40m 10 mm² wire size	**660350010**

TR26H
SAFETY
for swimming pool spotlights
single-phase transformers

TRANSFORMERS

TR26 H

Technical data

Rated primary voltage	230V
Rated secondary voltage	12V
Rated power range	350VA
Protection against electric shock	Class I
Thermal class	F (155°C)
Rated ambient temperature	40ºC
Protection index	IP20
Frequency	50/60Hz
Dielectric strength between primary and secondary	≥4,5kV
Dielectric strength between windings and metallic parts	≥2,5kV
Storage temperature	-40°C ... 85°C

Constructive characteristics

Electrostatic screen between windings
Windings in F(155°C) or H(180°C) thermal class
Varnish impregnation with high solids content in order to obtain low noise, good isolating properties and good protection against adverse ambient
Casing in polyamide self extinguishable
TIG welded magnetic core that reduce losses, vibrations, noise and allows small magnetization current

Standards

IEC/EN 61558-1 Transformers, general specifications
IEC/EN 61558-2-6 Safety transformers
RoHS Compliant

Dimensions

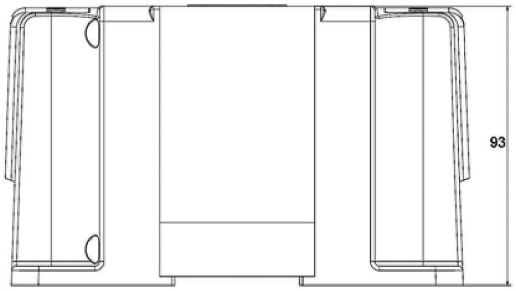

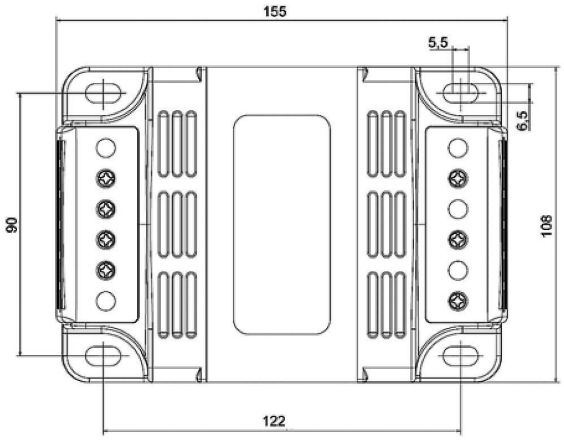

WEIGHT 4,2kg

Installation

Maximum torque rating to fix the transformer at panel: 4Nm
Remove 12mm of the insulation conductor from the end of the cable
Recommended torque rating for terminals: 2 Nm
Primary protection: fuse-link T3,15A according to IEC/EN60127 Standard
Secondary protection: fuse-link 25A gG according to IEC/EN60269 Standard

HEAD OFFICE AND FACTORY
SILICI, 67-69
08940 CORNELLA DE LLOBREGAT
BARCELONA
SPAIN
Tel. +34 93 377 85 85
Fax +34 93 377 82 82

INTERNATIONAL SALES
Tel. +34 93 475 08 64
Fax +34 93 480 07 75
export@dfelectric.es

NATIONAL SALES
Tel. 93 475 08 64
Fax 93 480 07 76
comercial@dfelectric.es

dfelectric.es

The data reflected in this technical record are subject to the correct installation of the product in accordance with manufacturer's instructions, relevant installation standards and professional practices, maintained and used in applications for which they were made.

DF ELECTRIC retains the right to change the dimensions, specifications, materials or design of its products at any time with or without notice.

©2021 DF Electric. All rights reserved

PROTECTING THE WORLD

FABRICADO EN ESPAÑA
MADE IN SPAIN