STM32F303xB STM32F303xC

Arm®-based Cortex®-M4 32b MCU+FPU, up to 256KB Flash+ 48KB SRAM, 4 ADCs, 2 DAC ch., 7 comp, 4 PGA, timers, 2.0-3.6 V

Datasheet - production data

Features

- Core: Arm® Cortex®-M4 32-bit CPU with FPU (72 MHz max), single-cycle multiplication and HW division, 90 DMIPS (from CCM), DSP instruction and MPU (memory protection unit)
- Operating conditions:
  - V_{DD}, V_{DDA} voltage range: 2.0 V to 3.6 V
- Memories
  - 128 to 256 Kbytes of Flash memory
  - Up to 40 Kbytes of SRAM, with HW parity check implemented on the first 16 Kbytes.
  - Routine booster: 8 Kbytes of SRAM on instruction and data bus, with HW parity check (CCM)
- CRC calculation unit
- Reset and supply management
  - Power-on/power-down reset (POR/PDR)
  - Programmable voltage detector (PVD)
  - Low-power modes: Sleep, Stop and Standby
  - V_{BAT} supply for RTC and backup registers
- Clock management
  - 4 to 32 MHz crystal oscillator
  - 32 kHz oscillator for RTC with calibration
  - Internal 8 MHz RC with x 16 PLL option
  - Internal 40 kHz oscillator
- Up to 87 fast I/Os
  - All mappable on external interrupt vectors
  - Several 5 V-tolerant
- Interconnect matrix
- 12-channel DMA controller
- Four ADCs 0.20 µS (up to 39 channels) with selectable resolution of 12/10/8/6 bits, 0 to 3.6 V conversion range, single ended/differential input, separate analog supply from 2 to 3.6 V
- Two 12-bit DAC channels with analog supply from 2.4 to 3.6 V

LQFP48 (7 × 7 mm)
LQFP64 (10 × 10 mm)
LQFP100 (14 × 14 mm)

WLCSP100 (0.4 mm pitch)

- Seven fast rail-to-rail analog comparators with analog supply from 2 to 3.6 V
- Four operational amplifiers that can be used in PGA mode, all terminals accessible with analog supply from 2.4 to 3.6 V
- Up to 24 capacitive sensing channels supporting touchkey, linear and rotary touch sensors
- Up to 13 timers
  - One 32-bit timer and two 16-bit timers with up to 4 IC/OC/PWM or pulse counter and quadrature (incremental) encoder input
  - Two 16-bit 6-channel advanced-control timers, with up to 6 PWM channels, deadtime generation and emergency stop
  - One 16-bit timer with 2 IC/OCs, 1 OCN/PWM, deadtime generation and emergency stop
  - Two 16-bit timers with IC/OC/OCN/PWM, deadtime generation and emergency stop
  - Two watchdog timers (independent, window)
  - SysTick timer: 24-bit downcounter
  - Two 16-bit basic timers to drive the DAC
- Calendar RTC with Alarm, periodic wakeup from Stop/Standby
- Communication interfaces
  - CAN interface (2.0B Active)
  - Two I^2C Fast mode plus (1 Mbit/s) with 20 mA current sink, SMBus/PMBus, wakeup from STOP

This is information on a product in full production. www.st.com

sales@prom-elec.com / ООО ПРОМЭЛЕКТРОНИКА

  - Up to five USART/UARTs (ISO 7816 interface, LIN, IrDA, modem control)
  - Up to three SPIs, two with multiplexed half/full duplex I2S interface, 4 to 16 programmable bit frames
  - USB 2.0 full speed interface
  - Infrared transmitter
- Serial wire debug, Cortex®-M4 with FPU ETM, JTAG
- 96-bit unique ID

Table 1. Device summary

Reference	Part number
STM32F303xB	STM32F303CB, STM32F303RB, STM32F303VB
STM32F303xC	STM32F303CC, STM32F303RC, STM32F303VC

Contents

1 Introduction 10

2 Description 11

3 Functional overview 14

3.1 Arm® Cortex®-M4 core with FPU with embedded Flash and SRAM 14

3.2 Memory protection unit (MPU) 14

3.3 Embedded Flash memory 14

3.4 Embedded SRAM 15

3.5 Boot modes 15

3.6 Cyclic redundancy check (CRC) 15

3.7 Power management 16

3.7.1 Power supply schemes 16

3.7.2 Power supply supervision 16

3.7.3 Voltage regulator 16

3.7.4 Low-power modes 17

3.8 Interconnect matrix 17

3.9 Clocks and startup 18

3.10 General-purpose input/outputs (GPIOs) 20

3.11 Direct memory access (DMA) 20

3.12 Interrupts and events 20

3.12.1 Nested vectored interrupt controller (NVIC) 20

3.13 Fast analog-to-digital converter (ADC) 21

3.13.1 Temperature sensor 21

3.13.2 Internal voltage reference (V_{REFINT}) 21

3.13.3 V_{BAT} battery voltage monitoring 22

3.13.4 OPAMP reference voltage (VREFOPAMP) 22

3.14 Digital-to-analog converter (DAC) 22

3.15 Operational amplifier (OPAMP) 22

3.16 Fast comparators (COMP) 23

3.17 Timers and watchdogs 23

3.17.1 Advanced timers (TIM1, TIM8) 24

3.17.2 General-purpose timers (TIM2, TIM3, TIM4, TIM15, TIM16, TIM17) . . . 24
3.17.3 Basic timers (TIM6, TIM7) . . . 24
3.17.4 Independent watchdog (IWDG) . . . 25
3.17.5 Window watchdog (WWDG) . . . 25
3.17.6 SysTick timer . . . 25
3.18 Real-time clock (RTC) and backup registers . . . 25
3.19 Inter-integrated circuit interface (I^2C) . . . 26
3.20 Universal synchronous/asynchronous receiver transmitter (USART) . . . 27
3.21 Universal asynchronous receiver transmitter (UART) . . . 27
3.22 Serial peripheral interface (SPI)/Inter-integrated sound interfaces (I2S) . 28
3.23 Controller area network (CAN) . . . 28
3.24 Universal serial bus (USB) . . . 28
3.25 Infrared Transmitter . . . 29
3.26 Touch sensing controller (TSC) . . . 29
3.27 Development support . . . 31
3.27.1 Serial wire JTAG debug port (SWJ-DP) . . . 31
3.27.2 Embedded trace macrocell™ . . . 31

4 Pinouts and pin description . . . 32

5 Memory mapping . . . 53

6 Electrical characteristics . . . 56
6.1 Parameter conditions . . . 56
6.1.1 Minimum and maximum values . . . 56
6.1.2 Typical values . . . 56
6.1.3 Typical curves . . . 56
6.1.4 Loading capacitor . . . 56
6.1.5 Pin input voltage . . . 56
6.1.6 Power supply scheme . . . 57
6.1.7 Current consumption measurement . . . 58
6.2 Absolute maximum ratings . . . 58
6.3 Operating conditions . . . 60
6.3.1 General operating conditions . . . 60
6.3.2 Operating conditions at power-up / power-down . . . 61
6.3.3 Embedded reset and power control block characteristics . . . 61

6.3.4 Embedded reference voltage 63
6.3.5 Supply current characteristics 63
6.3.6 Wakeup time from low-power mode 74
6.3.7 External clock source characteristics 75
6.3.8 Internal clock source characteristics 80
6.3.9 PLL characteristics 82
6.3.10 Memory characteristics 82
6.3.11 EMC characteristics 83
6.3.12 Electrical sensitivity characteristics 84
6.3.13 I/O current injection characteristics 85
6.3.14 I/O port characteristics 87
6.3.15 NRST pin characteristics 92
6.3.16 Timer characteristics 93
6.3.17 Communications interfaces 95
6.3.18 ADC characteristics 104
6.3.19 DAC electrical specifications 118
6.3.20 Comparator characteristics 120
6.3.21 Operational amplifier characteristics 122
6.3.22 Temperature sensor characteristics 124
6.3.23 V_{BAT} monitoring characteristics 125

7 Package information 126

7.1 LQFP100 – 14 x 14 mm, low-profile quad flat package information 126
7.2 LQFP64 – 10 x 10 mm, low-profile quad flat package information 129
7.3 LQFP48 – 7 x 7 mm, low-profile quad flat package information 132
7.4 WLCSP100 - 0.4 mm pitch wafer level chip scale package information 135
7.5 Thermal characteristics 139
7.5.1 Reference document 139
7.5.2 Selecting the product temperature range 140

8 Ordering information 142

9 Revision history 143

List of tables

Table 1. Device summary . . . 2
Table 2. STM32F303xB/STM32F303xC family device features and peripheral counts . . . 12
Table 3. External analog supply values for analog peripherals . . . 16
Table 4. STM32F303xB/STM32F303xC peripheral interconnect matrix . . . 17
Table 5. Timer feature comparison . . . 23
Table 6. Comparison of I2C analog and digital filters . . . 26
Table 7. STM32F303xB/STM32F303xC I^2C implementation . . . 26
Table 8. USART features . . . 27
Table 9. STM32F303xB/STM32F303xC SPI/I2S implementation . . . 28
Table 10. Capacitive sensing GPIOs available on STM32F303xB/STM32F303xC devices . . . 30
Table 11. No. of capacitive sensing channels available on STM32F303xB/STM32F303xC devices . 30
Table 12. Legend/abbreviations used in the pinout table . . . 36
Table 13. STM32F303xB/STM32F303xC pin definitions . . . 36
Table 14. Alternate functions for port A . . . 45
Table 15. Alternate functions for port B . . . 47
Table 16. Alternate functions for port C . . . 49
Table 17. Alternate functions for port D . . . 50
Table 18. Alternate functions for port E . . . 51
Table 19. Alternate functions for port F . . . 52
Table 20. STM32F303xB/STM32F303xC memory map, peripheral register boundary addresses . . 54
Table 21. Voltage characteristics . . . 58
Table 22. Current characteristics . . . 59
Table 23. Thermal characteristics . . . 59
Table 24. General operating conditions . . . 60
Table 25. Operating conditions at power-up / power-down . . . 61
Table 26. Embedded reset and power control block characteristics . . . 61
Table 27. Programmable voltage detector characteristics . . . 62
Table 28. Embedded internal reference voltage . . . 63
Table 29. Internal reference voltage calibration values . . . 63
Table 30. Typical and maximum current consumption from V_{DD} supply at V_{DD} = 3.6V . . . 64
Table 31. Typical and maximum current consumption from the V_{DDA} supply . . . 65
Table 32. Typical and maximum V_{DD} consumption in Stop and Standby modes . . . 66
Table 33. Typical and maximum V_{DDA} consumption in Stop and Standby modes . . . 66
Table 34. Typical and maximum current consumption from V_{BAT} supply . . . 67
Table 35. Typical current consumption in Run mode, code with data processing running from Flash 68
Table 36. Typical current consumption in Sleep mode, code running from Flash or RAM . . . 69
Table 37. Switching output I/O current consumption . . . 71
Table 38. Peripheral current consumption . . . 72
Table 39. Low-power mode wakeup timings . . . 74
Table 40. High-speed external user clock characteristics . . . 75
Table 41. Low-speed external user clock characteristics . . . 76
Table 42. HSE oscillator characteristics . . . 77
Table 43. LSE oscillator characteristics (f_{LSE} = 32.768 kHz) . . . 79
Table 44. HSI oscillator characteristics . . . 80
Table 45. LSI oscillator characteristics . . . 81
Table 46. PLL characteristics . . . 82
Table 47. Flash memory characteristics . . . 82
Table 48. Flash memory endurance and data retention . . . 82

Table 49. EMS characteristics . . . 83
Table 50. EMI characteristics . . . 84
Table 51. ESD absolute maximum ratings . . . 84
Table 52. Electrical sensitivities . . . 85
Table 53. I/O current injection susceptibility . . . 86
Table 54. I/O static characteristics . . . 87
Table 55. Output voltage characteristics . . . 90
Table 56. I/O AC characteristics . . . 91
Table 57. NRST pin characteristics . . . 92
Table 58. TIMx characteristics . . . 93
Table 59. IWDG min/max timeout period at 40 kHz (LSI) . . . 94
Table 60. WWDG min-max timeout value @72 MHz (PCLK) . . . 94
Table 61. I2C timings specification (see I2C specification, rev.03, June 2007) . . . 95
Table 62. I2C analog filter characteristics . . . 96
Table 63. SPI characteristics . . . 97
Table 64. I^2S characteristics . . . 100
Table 65. USB startup time . . . 102
Table 66. USB DC electrical characteristics . . . 102
Table 67. USB: Full-speed electrical characteristics . . . 103
Table 68. ADC characteristics . . . 104
Table 69. Maximum ADC RAIN . . . 108
Table 70. ADC accuracy - limited test conditions, 100-pin packages . . . 109
Table 71. ADC accuracy, 100-pin packages . . . 111
Table 72. ADC accuracy - limited test conditions, 64-pin packages . . . 113
Table 73. ADC accuracy, 64-pin packages . . . 115
Table 74. ADC accuracy at 1MSPS . . . 116
Table 75. DAC characteristics . . . 118
Table 76. Comparator characteristics . . . 120
Table 77. Operational amplifier characteristics . . . 122
Table 78. TS characteristics . . . 124
Table 79. Temperature sensor calibration values . . . 124
Table 80. V_{BAT} monitoring characteristics . . . 125
Table 81. LQPF100 – 14 x 14 mm, low-profile quad flat package mechanical data . . . 126
Table 82. LQFP64 – 10 x 10 mm, low-profile quad flat package mechanical data . . . 129
Table 83. LQFP48 – 7 x 7 mm, low-profile quad flat package mechanical data . . . 132
Table 84. WLCSP100 – 100L, 4.166 x 4.628 mm 0.4 mm pitch wafer level chip scale package mechanical data . . . 136
Table 85. WLCSP100 recommended PCB design rules (0.4 mm pitch) . . . 137
Table 86. Package thermal characteristics . . . 139
Table 87. Ordering information scheme . . . 142
Table 88. Document revision history . . . 143

List of figures

Figure 1. STM32F303xB/STM32F303xC block diagram . . . 13
Figure 2. Clock tree . . . 19
Figure 3. Infrared transmitter . . . 29
Figure 4. STM32F303xB/STM32F303xC LQFP48 pinout . . . 32
Figure 5. STM32F303xB/STM32F303xC LQFP64 pinout . . . 33
Figure 6. STM32F303xB/STM32F303xC LQFP100 pinout . . . 34
Figure 7. STM32F303xB/STM32F303xC WLCSP100 pinout . . . 35
Figure 8. STM32F303xB/STM32F303xC memory map . . . 53
Figure 9. Pin loading conditions . . . 56
Figure 10. Pin input voltage . . . 56
Figure 11. Power supply scheme . . . 57
Figure 12. Current consumption measurement scheme . . . 58
Figure 13. Typical V_{BAT} current consumption (LSE and RTC ON/LSEDRV[1:0] = ’00’) . . . 67
Figure 14. High-speed external clock source AC timing diagram . . . 75
Figure 15. Low-speed external clock source AC timing diagram . . . 76
Figure 16. Typical application with an 8 MHz crystal . . . 78
Figure 17. Typical application with a 32.768 kHz crystal . . . 80
Figure 18. HSI oscillator accuracy characterization results for soldered parts . . . 81
Figure 19. TC and TTa I/O input characteristics - CMOS port . . . 88
Figure 20. TC and TTa I/O input characteristics - TTL port . . . 88
Figure 21. Five volt tolerant (FT and FTf) I/O input characteristics - CMOS port . . . 89
Figure 22. Five volt tolerant (FT and FTf) I/O input characteristics - TTL port . . . 89
Figure 23. I/O AC characteristics definition . . . 92
Figure 24. Recommended NRST pin protection . . . 93
Figure 25. I^2C bus AC waveforms and measurement circuit . . . 96
Figure 26. SPI timing diagram - slave mode and CPHA = 0 . . . 98
Figure 27. SPI timing diagram - slave mode and CPHA = 1(1) . . . 98
Figure 28. SPI timing diagram - master mode(1) . . . 99
Figure 29. I^2S slave timing diagram (Philips protocol)(1) . . . 101
Figure 30. I^2S master timing diagram (Philips protocol)(1) . . . 101
Figure 31. USB timings: definition of data signal rise and fall time . . . 102
Figure 32. ADC typical current consumption on VDDA pin . . . 107
Figure 33. ADC typical current consumption on VREF+ pin . . . 107
Figure 34. ADC accuracy characteristics . . . 117
Figure 35. Typical connection diagram using the ADC . . . 117
Figure 36. 12-bit buffered /non-buffered DAC . . . 119
Figure 37. Maximum VREFINT scaler startup time from power down . . . 121
Figure 38. OPAMP voltage noise versus frequency . . . 124
Figure 39. LQFP100 – 14 x 14 mm, low-profile quad flat package outline . . . 126
Figure 40. LQFP100 – 14 x 14 mm, low-profile quad flat package recommended footprint . . . 127
Figure 41. LQFP100 – 14 x 14 mm, low-profile quad flat package top view example . . . 128
Figure 42. LQFP64 – 10 x 10 mm, low-profile quad flat package outline . . . 129
Figure 43. LQFP64 – 10 x 10 mm, low-profile quad flat package recommended footprint . . . 130
Figure 44. LQFP64 – 10 x 10 mm, low-profile quad flat package top view example . . . 131
Figure 45. LQFP48 – 7 x 7 mm, low-profile quad flat package outline . . . 132
Figure 46. LQFP48 - 7 x 7 mm, low-profile quad flat package recommended footprint . . . 133
Figure 47. LQFP48 - 7 x 7 mm, low-profile quad flat package top view example . . . 134
Figure 48. WLCSP100 – 100L, 4.166 x 4.628 mm 0.4 mm pitch wafer level chip scale

package outline 135
Figure 49. WLCSP100 – 100L, 4.166 x 4.628 mm 0.4 mm pitch wafer level chip scale package recommended footprint 137
Figure 50. WLCSP100, 0.4 mm pitch wafer level chip scale package top view example 138

1 Introduction

This datasheet provides the ordering information and mechanical device characteristics of the STM32F303xB/STM32F303xC microcontrollers.

This STM32F303xB/STM32F303xC datasheet should be read in conjunction with the STM32F303x, STM32F358xC and STM32F328x4/6/8 reference manual (RM0316). The reference manual is available from the STMicroelectronics website *www.st.com*.

For information on the Arm®[a] Cortex®-M4 core with FPU, refer to:

- **Cortex®-M4 with FPU Technical Reference Manual**, available from the http://www.arm.com website.
- **STM32F3xxx and STM32F4xxx Cortex®-M4 programming manual (PM0214)** available from our website *www.st.com*.

a. Arm is a registered trademark of Arm Limited (or its subsidiaries) in the US and/or elsewhere.

2 Description

The STM32F303xB/STM32F303xC family is based on the high-performance Arm® Cortex®-M4 32-bit RISC core with FPU operating at a frequency of up to 72 MHz, and embedding a floating point unit (FPU), a memory protection unit (MPU) and an embedded trace macrocell (ETM). The family incorporates high-speed embedded memories (up to 256 Kbytes of Flash memory, up to 40 Kbytes of SRAM) and an extensive range of enhanced I/Os and peripherals connected to two APB buses.

The devices offer up to four fast 12-bit ADCs (5 Msps), seven comparators, four operational amplifiers, up to two DAC channels, a low-power RTC, up to five general-purpose 16-bit timers, one general-purpose 32-bit timer, and two timers dedicated to motor control. They also feature standard and advanced communication interfaces: up to two I^2Cs, up to three SPIs (two SPIs are with multiplexed full-duplex I2Ss), three USARTs, up to two UARTs, CAN and USB. To achieve audio class accuracy, the I2S peripherals can be clocked via an external PLL.

The STM32F303xB/STM32F303xC family operates in the -40 to +85 °C and -40 to +105 °C temperature ranges from a 2.0 to 3.6 V power supply. A comprehensive set of power-saving mode allows the design of low-power applications.

The STM32F303xB/STM32F303xC family offers devices in four packages ranging from 48 pins to 100 pins.

The set of included peripherals changes with the device chosen.

Table 2. STM32F303xB/STM32F303xC family device features and peripheral counts

Peripheral		STM32F303Cx		STM32F303Rx		STM32F303Vx	
Flash (Kbytes)		128	256	128	256	128	256
SRAM (Kbytes) on data bus		32	40	32	40	32	40
CCM (Core Coupled Memory) RAM (Kbytes)		8					
Timers	Advanced control	2 (16-bit)					
	General purpose	5 (16-bit) 1 (32-bit)					
	Basic	2 (16-bit)					
PWM channels (all) (1)		31		33			
PWM channels (except complementary)		22		24			
Communication interfaces	SPI (I2S)(2)	3(2)					
	I^2C	2					
	USART	3					
	UART	0		2			
	CAN	1					
	USB	1					
GPIOs	Normal I/Os (TC, TTa)	20		27		45 in LQFP100 37 in WLCSP100	
	5-volt tolerant I/Os (FT, FTf)	17		25		42 in LQFP100 40 in WLCSP100	
DMA channels		12					
Capacitive sensing channels		17		18		24	
12-bit ADCs		4					
Number of channels		15		22		39 in LQFP100 32 in WLCSP100	
12-bit DAC channels		2					
Analog comparator		7					
Operational amplifiers		4					
CPU frequency		72 MHz					
Operating voltage		2.0 to 3.6 V					
Operating temperature		Ambient operating temperature: - 40 to 85 °C / - 40 to 105 °C Junction temperature: - 40 to 125 °C					
Packages		LQFP48		LQFP64		LQFP100 WLCSP100	

1. This total number considers also the PWMs generated on the complementary output channels
2. The SPI interfaces can work in an exclusive way in either the SPI mode or the I^2S audio mode.

Figure 1. STM32F303xB/STM32F303xC block diagram

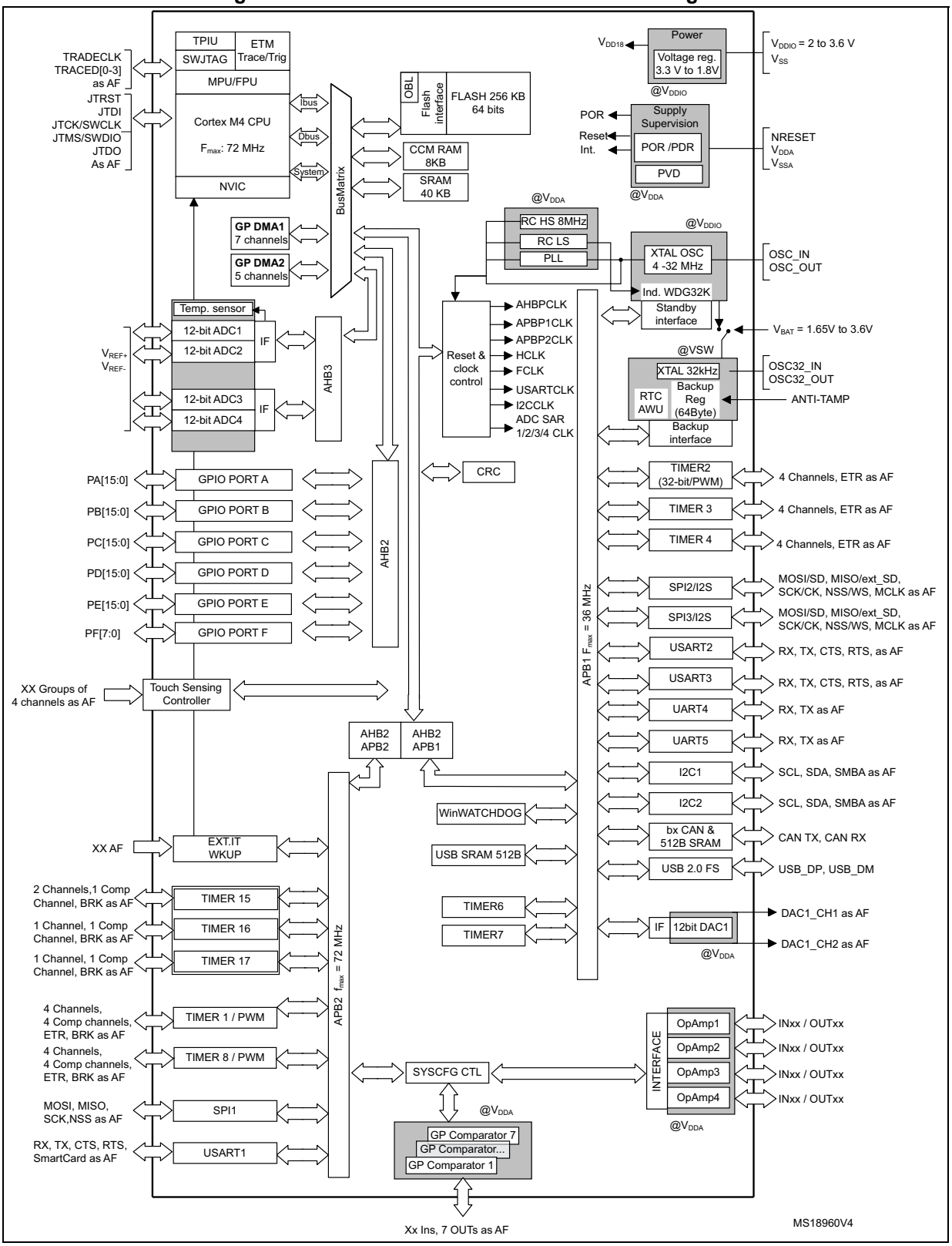

1. AF: alternate function on I/O pins.

3 Functional overview

3.1 Arm® Cortex®-M4 core with FPU with embedded Flash and SRAM

The Arm Cortex-M4 processor with FPU is the latest generation of Arm processors for embedded systems. It was developed to provide a low-cost platform that meets the needs of MCU implementation, with a reduced pin count and low-power consumption, while delivering outstanding computational performance and an advanced response to interrupts.

The Arm Cortex-M4 32-bit RISC processor with FPU features exceptional code-efficiency, delivering the high-performance expected from an Arm core in the memory size usually associated with 8- and 16-bit devices.

The processor supports a set of DSP instructions which allow efficient signal processing and complex algorithm execution.

Its single precision FPU speeds up software development by using metalanguage development tools, while avoiding saturation.

With its embedded Arm core, the STM32F303xB/STM32F303xC family is compatible with all Arm tools and software.

Figure 1 shows the general block diagram of the STM32F303xB/STM32F303xC family devices.

3.2 Memory protection unit (MPU)

The memory protection unit (MPU) is used to separate the processing of tasks from the data protection. The MPU can manage up to 8 protection areas that can all be further divided up into 8 subareas. The protection area sizes are between 32 bytes and the whole 4 gigabytes of addressable memory.

The memory protection unit is especially helpful for applications where some critical or certified code has to be protected against the misbehavior of other tasks. It is usually managed by an RTOS (real-time operating system). If a program accesses a memory location that is prohibited by the MPU, the RTOS can detect it and take action. In an RTOS environment, the kernel can dynamically update the MPU area setting, based on the process to be executed.

The MPU is optional and can be bypassed for applications that do not need it.

3.3 Embedded Flash memory

All STM32F303xB/STM32F303xC devices feature up to 256 Kbytes of embedded Flash memory available for storing programs and data. The Flash memory access time is adjusted to the CPU clock frequency (0 wait state from 0 to 24 MHz, 1 wait state from 24 to 48 MHz and 2 wait states above).

3.4 Embedded SRAM

STM32F303xB/STM32F303xC devices feature up to 48 Kbytes of embedded SRAM with hardware parity check. The memory can be accessed in read/write at CPU clock speed with 0 wait states, allowing the CPU to achieve 90 Dhrystone Mips at 72 MHz (when running code from the CCM (Core Coupled Memory) RAM).

- 8 Kbytes of CCM RAM mapped on both instruction and data bus, used to execute critical routines or to access data (parity check on all of CCM RAM).
- 40 Kbytes of SRAM mapped on the data bus (parity check on first 16 Kbytes of SRAM).

3.5 Boot modes

At startup, Boot0 pin and Boot1 option bit are used to select one of three boot options:

- Boot from user Flash
- Boot from system memory
- Boot from embedded SRAM

The boot loader is located in the system memory. It is used to reprogram the Flash memory by using USART1 (PA9/PA10), USART2 (PD5/PD6) or USB (PA11/PA12) through DFU (device firmware upgrade).

3.6 Cyclic redundancy check (CRC)

The CRC (cyclic redundancy check) calculation unit is used to get a CRC code using a configurable generator polynomial value and size.

Among other applications, CRC-based techniques are used to verify data transmission or storage integrity. In the scope of the EN/IEC 60335-1 standard, they offer a means of verifying the Flash memory integrity. The CRC calculation unit helps compute a signature of the software during runtime, to be compared with a reference signature generated at linktime and stored at a given memory location.

3.7 Power management

3.7.1 Power supply schemes

- V_{SS}, V_{DD} = 2.0 to 3.6 V: external power supply for I/Os and the internal regulator. It is provided externally through V_{DD} pins.
- V_{SSA}, V_{DDA} = 2.0 to 3.6 V: external analog power supply for ADC, DACs, comparators operational amplifiers, reset blocks, RCs and PLL. The minimum voltage to be applied to V_{DDA} differs from one analog peripheral to another. *Table 3* provides the summary of the V_{DDA} ranges for analog peripherals. The V_{DDA} voltage level must be always greater or equal to the V_{DD} voltage level and must be provided first.
- V_{BAT} = 1.65 to 3.6 V: power supply for RTC, external clock 32 kHz oscillator and backup registers (through power switch) when V_{DD} is not present.

Table 3. External analog supply values for analog peripherals

Analog peripheral	Minimum V_{DDA} supply	Maximum V_{DDA} supply
ADC / COMP	2.0 V	3.6 V
DAC / OPAMP	2.4 V	3.6V

3.7.2 Power supply supervision

The device has an integrated power-on reset (POR) and power-down reset (PDR) circuits. They are always active, and ensure proper operation above a threshold of 2 V. The device remains in reset mode when the monitored supply voltage is below a specified threshold, $V_{POR/PDR}$, without the need for an external reset circuit.

- The POR monitors only the V_{DD} supply voltage. During the startup phase it is required that V_{DDA} should arrive first and be greater than or equal to V_{DD}.
- The PDR monitors both the V_{DD} and V_{DDA} supply voltages, however the V_{DDA} power supply supervisor can be disabled (by programming a dedicated Option bit) to reduce the power consumption if the application design ensures that V_{DDA} is higher than or equal to V_{DD}.

The device features an embedded programmable voltage detector (PVD) that monitors the V_{DD} power supply and compares it to the V_{PVD} threshold. An interrupt can be generated when V_{DD} drops below the V_{PVD} threshold and/or when V_{DD} is higher than the V_{PVD} threshold. The interrupt service routine can then generate a warning message and/or put the MCU into a safe state. The PVD is enabled by software.

3.7.3 Voltage regulator

The regulator has three operation modes: main (MR), low-power (LPR), and power-down.

- The MR mode is used in the nominal regulation mode (Run)
- The LPR mode is used in Stop mode.
- The power-down mode is used in Standby mode: the regulator output is in high impedance, and the kernel circuitry is powered down thus inducing zero consumption.

The voltage regulator is always enabled after reset. It is disabled in Standby mode.

3.7.4 Low-power modes

The STM32F303xB/STM32F303xC supports three low-power modes to achieve the best compromise between low-power consumption, short startup time and available wakeup sources:

- Sleep mode

  In Sleep mode, only the CPU is stopped. All peripherals continue to operate and can wake up the CPU when an interrupt/event occurs.

- Stop mode

  Stop mode achieves the lowest power consumption while retaining the content of SRAM and registers. All clocks in the 1.8 V domain are stopped, the PLL, the HSI RC and the HSE crystal oscillators are disabled. The voltage regulator can also be put either in normal or in low-power mode.

  The device can be woken up from Stop mode by any of the EXTI line. The EXTI line source can be one of the 16 external lines, the PVD output, the USB wakeup, the RTC alarm, COMPx, I2Cx or U(S)ARTx.

- Standby mode

  The Standby mode is used to achieve the lowest power consumption. The internal voltage regulator is switched off so that the entire 1.8 V domain is powered off. The PLL, the HSI RC and the HSE crystal oscillators are also switched off. After entering Standby mode, SRAM and register contents are lost except for registers in the Backup domain and Standby circuitry.

  The device exits Standby mode when an external reset (NRST pin), an IWDG reset, a rising edge on the WKUP pin or an RTC alarm occurs.

Note: The RTC, the IWDG and the corresponding clock sources are not stopped by entering Stop or Standby mode.

3.8 Interconnect matrix

Several peripherals have direct connections between them. This allows autonomous communication between peripherals, saving CPU resources thus power supply consumption. In addition, these hardware connections allow fast and predictable latency.

Table 4. STM32F303xB/STM32F303xC peripheral interconnect matrix

Interconnect source	Interconnect destination	Interconnect action
TIMx	TIMx	Timers synchronization or chaining
	ADCx DAC1	Conversion triggers
	DMA	Memory to memory transfer trigger
	Compx	Comparator output blanking
COMPx	TIMx	Timer input: OCREF_CLR input, input capture
ADCx	TIMx	Timer triggered by analog watchdog

Table 4. STM32F303xB/STM32F303xC peripheral interconnect matrix (continued)

Interconnect source	Interconnect destination	Interconnect action
GPIO RTCCLK HSE/32 MC0	TIM16	Clock source used as input channel for HSI and LSI calibration
CSS CPU (hard fault) COMPx PVD GPIO	TIM1, TIM8, TIM15, 16, 17	Timer break
GPIO	TIMx	External trigger, timer break
	ADCx DAC1	Conversion external trigger
DAC1	COMPx	Comparator inverting input

Note: For more details about the interconnect actions, please refer to the corresponding sections in the reference manual (RM0316).

3.9 Clocks and startup

System clock selection is performed on startup, however the internal RC 8 MHz oscillator is selected as default CPU clock on reset. An external 4-32 MHz clock can be selected, in which case it is monitored for failure. If failure is detected, the system automatically switches back to the internal RC oscillator. A software interrupt is generated if enabled. Similarly, full interrupt management of the PLL clock entry is available when necessary (for example with failure of an indirectly used external oscillator).

Several prescalers allow to configure the AHB frequency, the high speed APB (APB2) and the low speed APB (APB1) domains. The maximum frequency of the AHB and the high speed APB domains is 72 MHz, while the maximum allowed frequency of the low speed APB domain is 36 MHz.

Figure 2. Clock tree

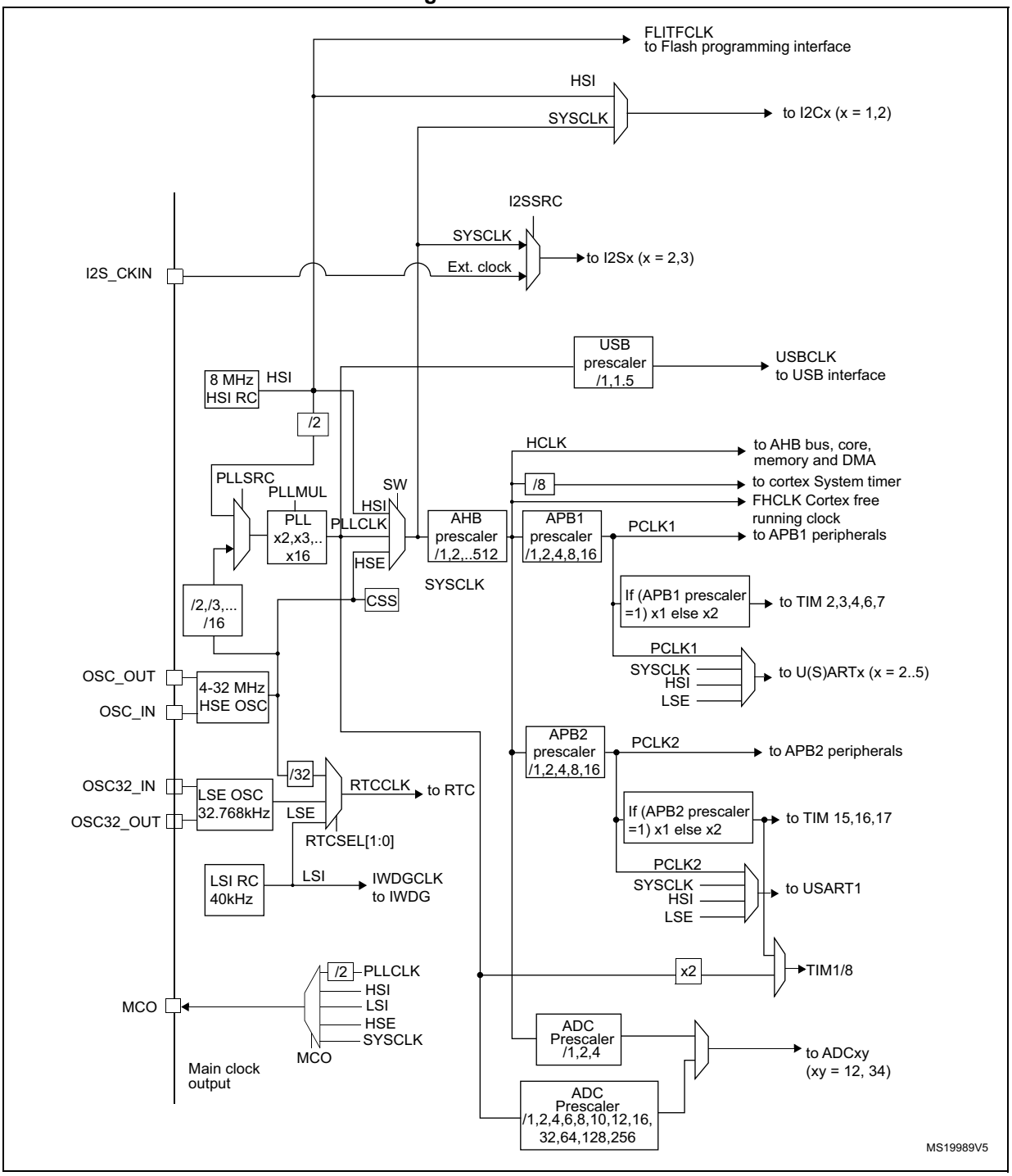

3.10 General-purpose input/outputs (GPIOs)

Each of the GPIO pins can be configured by software as output (push-pull or open-drain), as input (with or without pull-up or pull-down) or as peripheral alternate function. Most of the GPIO pins are shared with digital or analog alternate functions. All GPIOs are high current capable except for analog inputs.

The I/Os alternate function configuration can be locked if needed following a specific sequence in order to avoid spurious writing to the I/Os registers.

Fast I/O handling allows I/O toggling up to 36 MHz.

3.11 Direct memory access (DMA)

The flexible general-purpose DMA is able to manage memory-to-memory, peripheral-to-memory and memory-to-peripheral transfers. The DMA controller supports circular buffer management, avoiding the generation of interrupts when the controller reaches the end of the buffer.

Each of the 12 DMA channels is connected to dedicated hardware DMA requests, with software trigger support for each channel. Configuration is done by software and transfer sizes between source and destination are independent.

The DMA can be used with the main peripherals: SPI, I^2C, USART, general-purpose timers, DAC and ADC.

3.12 Interrupts and events

3.12.1 Nested vectored interrupt controller (NVIC)

The STM32F303xB/STM32F303xC devices embed a nested vectored interrupt controller (NVIC) able to handle up to 66 maskable interrupt channels and 16 priority levels.

The NVIC benefits are the following:

- Closely coupled NVIC gives low latency interrupt processing
- Interrupt entry vector table address passed directly to the core
- Closely coupled NVIC core interface
- Allows early processing of interrupts
- Processing of late arriving higher priority interrupts
- Support for tail chaining
- Processor state automatically saved
- Interrupt entry restored on interrupt exit with no instruction overhead

The NVIC hardware block provides flexible interrupt management features with minimal interrupt latency.

3.13 Fast analog-to-digital converter (ADC)

four fast analog-to-digital converters 5 MSPS, with selectable resolution between 12 and 6 bit, are embedded in the STM32F303xB/STM32F303xC family devices. The ADCs have up to 39 external channels. Some of the external channels are shared between ADC1&2 and between ADC3&4. Channels can be configured to be either single-ended input or differential input. The ADCs can perform conversions in single-shot or scan modes. In scan mode, automatic conversion is performed on a selected group of analog inputs.

The ADCs have also internal channels: Temperature sensor connected to ADC1 channel 16, $V_{BAT/2}$ connected to ADC1 channel 17, Voltage reference V_{REFINT} connected to the 4 ADCs channel 18, VOPAMP1 connected to ADC1 channel 15, VOPAMP2 connected to ADC2 channel 17, VREFOPAMP3 connected to ADC3 channel 17 and VREFOPAMP4 connected to ADC4 channel 17.

Additional logic functions embedded in the ADC interface allow:

- Simultaneous sample and hold
- Interleaved sample and hold
- Single-shunt phase current reading techniques.

The ADC can be served by the DMA controller. 3 analog watchdogs per ADC are available.

An analog watchdog feature allows very precise monitoring of the converted voltage of one, some or all selected channels. An interrupt is generated when the converted voltage is outside the programmed thresholds.

The events generated by the general-purpose timers and the advanced-control timers (TIM1 and TIM8) can be internally connected to the ADC start trigger and injection trigger, respectively, to allow the application to synchronize A/D conversion and timers.

3.13.1 Temperature sensor

The temperature sensor (TS) generates a voltage V_{SENSE} that varies linearly with temperature.

The temperature sensor is internally connected to the ADC1_IN16 input channel which is used to convert the sensor output voltage into a digital value.

The sensor provides good linearity but it has to be calibrated to obtain good overall accuracy of the temperature measurement. As the offset of the temperature sensor varies from chip to chip due to process variation, the uncalibrated internal temperature sensor is suitable for applications that detect temperature changes only.

To improve the accuracy of the temperature sensor measurement, each device is individually factory-calibrated by ST. The temperature sensor factory calibration data are stored by ST in the system memory area, accessible in read-only mode.

3.13.2 Internal voltage reference (V_{REFINT})

The internal voltage reference (V_{REFINT}) provides a stable (bandgap) voltage output for the ADC and Comparators. V_{REFINT} is internally connected to the ADCx_IN18, x=1...4 input channel. The precise voltage of V_{REFINT} is individually measured for each part by ST during production test and stored in the system memory area. It is accessible in read-only mode.

3.13.3 V_{BAT} battery voltage monitoring

This embedded hardware feature allows the application to measure the V_{BAT} battery voltage using the internal ADC channel ADC1_IN17. As the V_{BAT} voltage may be higher than V_{DDA}, and thus outside the ADC input range, the V_{BAT} pin is internally connected to a bridge divider by 2. As a consequence, the converted digital value is half the V_{BAT} voltage.

3.13.4 OPAMP reference voltage (VREFOPAMP)

Every OPAMP reference voltage can be measured using a corresponding ADC internal channel: VREFOPAMP1 connected to ADC1 channel 15, VREFOPAMP2 connected to ADC2 channel 17, VREFOPAMP3 connected to ADC3 channel 17, VREFOPAMP4 connected to ADC4 channel 17.

3.14 Digital-to-analog converter (DAC)

Two 12-bit buffered DAC channels can be used to convert digital signals into analog voltage signal outputs. The chosen design structure is composed of integrated resistor strings and an amplifier in inverting configuration.

This digital interface supports the following features:

- Two DAC output channels
- 8-bit or 10-bit monotonic output
- Left or right data alignment in 12-bit mode
- Synchronized update capability
- Noise-wave generation
- Triangular-wave generation
- Dual DAC channel independent or simultaneous conversions
- DMA capability (for each channel)
- External triggers for conversion

3.15 Operational amplifier (OPAMP)

The STM32F303xB/STM32F303xC embeds four operational amplifiers with external or internal follower routing and PGA capability (or even amplifier and filter capability with external components). When an operational amplifier is selected, an external ADC channel is used to enable output measurement.

The operational amplifier features:

- 8.2 MHz bandwidth
- 0.5 mA output capability
- Rail-to-rail input/output
- In PGA mode, the gain can be programmed to be 2, 4, 8 or 16.

3.16 Fast comparators (COMP)

The STM32F303xB/STM32F303xC devices embed seven fast rail-to-rail comparators with programmable reference voltage (internal or external), hysteresis and speed (low speed for low-power) and with selectable output polarity.

The reference voltage can be one of the following:

- External I/O
- DAC output pin
- Internal reference voltage or submultiple (1/4, 1/2, 3/4). Refer to *Table 28: Embedded internal reference voltage on page 63* for the value and precision of the internal reference voltage.

All comparators can wake up from STOP mode, generate interrupts and breaks for the timers and can be also combined per pair into a window comparator

3.17 Timers and watchdogs

The STM32F303xB/STM32F303xC includes two advanced control timers, up to six general-purpose timers, two basic timers, two watchdog timers and a SysTick timer. The table below compares the features of the advanced control, general purpose and basic timers.

Table 5. Timer feature comparison

Timer type	Timer	Counter resolution	Counter type	Prescaler factor	DMA request generation	Capture/ compare Channels	Complementary outputs
Advanced	TIM1, TIM8	16-bit	Up, Down, Up/Down	Any integer between 1 and 65536	Yes	4	Yes
General-purpose	TIM2	32-bit	Up, Down, Up/Down	Any integer between 1 and 65536	Yes	4	No
General-purpose	TIM3, TIM4	16-bit	Up, Down, Up/Down	Any integer between 1 and 65536	Yes	4	No
General-purpose	TIM15	16-bit	Up	Any integer between 1 and 65536	Yes	2	1
General-purpose	TIM16, TIM17	16-bit	Up	Any integer between 1 and 65536	Yes	1	1
Basic	TIM6, TIM7	16-bit	Up	Any integer between 1 and 65536	Yes	0	No

Note: TIM1/8 can have PLL as clock source, and therefore can be clocked at 144 MHz.

3.17.1 Advanced timers (TIM1, TIM8)

The advanced-control timers (TIM1 and TIM8) can each be seen as a three-phase PWM multiplexed on six channels. They have complementary PWM outputs with programmable inserted dead-times. They can also be seen as complete general-purpose timers. The four independent channels can be used for:

- Input capture
- Output compare
- PWM generation (edge or center-aligned modes) with full modulation capability (0-100%)
- One-pulse mode output

In debug mode, the advanced-control timer counter can be frozen and the PWM outputs disabled to turn off any power switches driven by these outputs.

Many features are shared with those of the general-purpose TIM timers (described in *Section 3.17.2* using the same architecture, so the advanced-control timers can work together with the TIM timers via the Timer Link feature for synchronization or event chaining.

3.17.2 General-purpose timers (TIM2, TIM3, TIM4, TIM15, TIM16, TIM17)

There are up to six synchronizable general-purpose timers embedded in the STM32F303xB/STM32F303xC (see *Table 5* for differences). Each general-purpose timer can be used to generate PWM outputs, or act as a simple time base.

- TIM2, 3, and TIM4

  These are full-featured general-purpose timers:

  – TIM2 has a 32-bit auto-reload up/downcounter and 32-bit prescaler

  – TIM3 and 4 have 16-bit auto-reload up/downcounters and 16-bit prescalers.

  These timers all feature 4 independent channels for input capture/output compare, PWM or one-pulse mode output. They can work together, or with the other general-purpose timers via the Timer Link feature for synchronization or event chaining.

  The counters can be frozen in debug mode.

  All have independent DMA request generation and support quadrature encoders.

- TIM15, 16 and 17

  These three timers general-purpose timers with mid-range features:

  They have 16-bit auto-reload upcounters and 16-bit prescalers.

  – TIM15 has 2 channels and 1 complementary channel

  – TIM16 and TIM17 have 1 channel and 1 complementary channel

  All channels can be used for input capture/output compare, PWM or one-pulse mode output.

  The timers can work together via the Timer Link feature for synchronization or event chaining. The timers have independent DMA request generation.

  The counters can be frozen in debug mode.

3.17.3 Basic timers (TIM6, TIM7)

These timers are mainly used for DAC trigger generation. They can also be used as a generic 16-bit time base.

3.17.4 Independent watchdog (IWDG)

The independent watchdog is based on a 12-bit downcounter and 8-bit prescaler. It is clocked from an independent 40 kHz internal RC and as it operates independently from the main clock, it can operate in Stop and Standby modes. It can be used either as a watchdog to reset the device when a problem occurs, or as a free running timer for application timeout management. It is hardware or software configurable through the option bytes. The counter can be frozen in debug mode.

3.17.5 Window watchdog (WWDG)

The window watchdog is based on a 7-bit downcounter that can be set as free running. It can be used as a watchdog to reset the device when a problem occurs. It is clocked from the main clock. It has an early warning interrupt capability and the counter can be frozen in debug mode.

3.17.6 SysTick timer

This timer is dedicated to real-time operating systems, but could also be used as a standard down counter. It features:

- A 24-bit down counter
- Autoreload capability
- Maskable system interrupt generation when the counter reaches 0.
- Programmable clock source

3.18 Real-time clock (RTC) and backup registers

The RTC and the 16 backup registers are supplied through a switch that takes power from either the V_{DD} supply when present or the V_{BAT} pin. The backup registers are sixteen 32-bit registers used to store 64 bytes of user application data when V_{DD} power is not present.

They are not reset by a system or power reset, or when the device wakes up from Standby mode.

The RTC is an independent BCD timer/counter.It supports the following features:

- Calendar with subsecond, seconds, minutes, hours (12 or 24 format), week day, date, month, year, in BCD (binary-coded decimal) format.
- Reference clock detection: a more precise second source clock (50 or 60 Hz) can be used to enhance the calendar precision.
- Automatic correction for 28, 29 (leap year), 30 and 31 days of the month.
- Two programmable alarms with wake up from Stop and Standby mode capability.
- On-the-fly correction from 1 to 32767 RTC clock pulses. This can be used to synchronize it with a master clock.
- Digital calibration circuit with 1 ppm resolution, to compensate for quartz crystal inaccuracy.
- Three anti-tamper detection pins with programmable filter. The MCU can be woken up from Stopand Standby modes on tamper event detection.
- Timestamp feature which can be used to save the calendar content. This function can be triggered by an event on the timestamp pin, or by a tamper event. The MCU can be woken up from Stop and Standby modes on timestamp event detection.

- 17-bit Auto-reload counter for periodic interrupt with wakeup from STOP/STANDBY capability.

The RTC clock sources can be:

- A 32.768 kHz external crystal
- A resonator or oscillator
- The internal low-power RC oscillator (typical frequency of 40 kHz)
- The high-speed external clock divided by 32.

3.19 Inter-integrated circuit interface (I^2C)

Up to two I^2C bus interfaces can operate in multimaster and slave modes. They can support standard (up to 100 KHz), fast (up to 400 KHz) and fast mode + (up to 1 MHz) modes.

Both support 7-bit and 10-bit addressing modes, multiple 7-bit slave addresses (2 addresses, 1 with configurable mask). They also include programmable analog and digital noise filters.

Table 6. Comparison of I2C analog and digital filters

	Analog filter	Digital filter
Pulse width of suppressed spikes	50 ns	Programmable length from 1 to 15 I2C peripheral clocks
Benefits	Available in Stop mode	1. Extra filtering capability vs. standard requirements. 2. Stable length
Drawbacks	Variations depending on temperature, voltage, process	Wakeup from Stop on address match is not available when digital filter is enabled.

In addition, they provide hardware support for SMBUS 2.0 and PMBUS 1.1: ARP capability, Host notify protocol, hardware CRC (PEC) generation/verification, timeouts verifications and ALERT protocol management. They also have a clock domain independent from the CPU clock, allowing the I2Cx (x=1,2) to wake up the MCU from Stop mode on address match.

The I2C interfaces can be served by the DMA controller.

Refer to *Table 7* for the features available in I2C1 and I2C2.

Table 7. STM32F303xB/STM32F303xC I^2C implementation

I2C features(1)	I2C1	I2C2
7-bit addressing mode	X	X
10-bit addressing mode	X	X
Standard mode (up to 100 kbit/s)	X	X
Fast mode (up to 400 kbit/s)	X	X
Fast Mode Plus with 20mA output drive I/Os (up to 1 Mbit/s)	X	X
Independent clock	X	X

Table 7. STM32F303xB/STM32F303xC I²C implementation (continued)

I2C features[1]	I2C1	I2C2
SMBus	X	X
Wakeup from STOP	X	X

1. X = supported.

3.20 Universal synchronous/asynchronous receiver transmitter (USART)

The STM32F303xB/STM32F303xC devices have three embedded universal synchronous/asynchronous receiver transmitters (USART1, USART2 and USART3).

The USART interfaces are able to communicate at speeds of up to 9 Mbits/s.

They provide hardware management of the CTS and RTS signals, they support IrDA SIR ENDEC, the multiprocessor communication mode, the single-wire half-duplex communication mode and have LIN Master/Slave capability. The USART interfaces can be served by the DMA controller.

3.21 Universal asynchronous receiver transmitter (UART)

The STM32F303xB/STM32F303xC devices have 2 embedded universal asynchronous receiver transmitters (UART4, and UART5). The UART interfaces support IrDA SIR ENDEC, multiprocessor communication mode and single-wire half-duplex communication mode. The UART4 interface can be served by the DMA controller.

Refer to *Table 8* for the features available in all U(S)ART interfaces.

Table 8. USART features

USART modes/features[1]	USART1	USART2	USART3	UART4	UART5
Hardware flow control for modem	X	X	X	-	-
Continuous communication using DMA	X	X	X	X	-
Multiprocessor communication	X	X	X	X	X
Synchronous mode	X	X	X	-	-
Smartcard mode	X	X	X	-	-
Single-wire half-duplex communication	X	X	X	X	X
IrDA SIR ENDEC block	X	X	X	X	X
LIN mode	X	X	X	X	X
Dual clock domain and wakeup from Stop mode	X	X	X	X	X
Receiver timeout interrupt	X	X	X	X	X
Modbus communication	X	X	X	X	X
Auto baud rate detection	X	X	X	-	-
Driver Enable	X	X	X	-	-

1. X = supported.

3.22 Serial peripheral interface (SPI)/Inter-integrated sound interfaces (I2S)

Up to three SPIs are able to communicate up to 18 Mbits/s in slave and master modes in full-duplex and half-duplex communication modes. The 3-bit prescaler gives 8 master mode frequencies and the frame size is configurable from 4 bits to 16 bits.

Two standard I2S interfaces (multiplexed with SPI2 and SPI3) supporting four different audio standards can operate as master or slave at half-duplex and full duplex communication modes. They can be configured to transfer 16 and 24 or 32 bits with 16-bit or 32-bit data resolution and synchronized by a specific signal. Audio sampling frequency from 8 kHz up to 192 kHz can be set by 8-bit programmable linear prescaler. When operating in master mode it can output a clock for an external audio component at 256 times the sampling frequency.

Refer to *Table 9* for the features available in SPI1, SPI2 and SPI3.

Table 9. STM32F303xB/STM32F303xC SPI/I2S implementation

SPI features[1]	SPI1	SPI2	SPI3
Hardware CRC calculation	X	X	X
Rx/Tx FIFO	X	X	X
NSS pulse mode	X	X	X
I2S mode	-	X	X
TI mode	X	X	X

1. **X = supported.**

3.23 Controller area network (CAN)

The CAN is compliant with specifications 2.0A and B (active) with a bit rate up to 1 Mbit/s. It can receive and transmit standard frames with 11-bit identifiers as well as extended frames with 29-bit identifiers. It has three transmit mailboxes, two receive FIFOs with 3 stages and 14 scalable filter banks.

3.24 Universal serial bus (USB)

The STM32F303xB/STM32F303xC devices embed an USB device peripheral compatible with the USB full-speed 12 Mbs. The USB interface implements a full-speed (12 Mbit/s) function interface. It has software-configurable endpoint setting and suspend/resume support. The dedicated 48 MHz clock is generated from the internal main PLL (the clock source must use a HSE crystal oscillator). The USB has a dedicated 512-bytes SRAM memory for data transmission and reception.

3.25 Infrared Transmitter

The STM32F303xB/STM32F303xC devices provide an infrared transmitter solution. The solution is based on internal connections between TIM16 and TIM17 as shown in the figure below.

TIM17 is used to provide the carrier frequency and TIM16 provides the main signal to be sent. The infrared output signal is available on PB9 or PA13.

To generate the infrared remote control signals, TIM16 channel 1 and TIM17 channel 1 must be properly configured to generate correct waveforms. All standard IR pulse modulation modes can be obtained by programming the two timers output compare channels.

Figure 3. Infrared transmitter

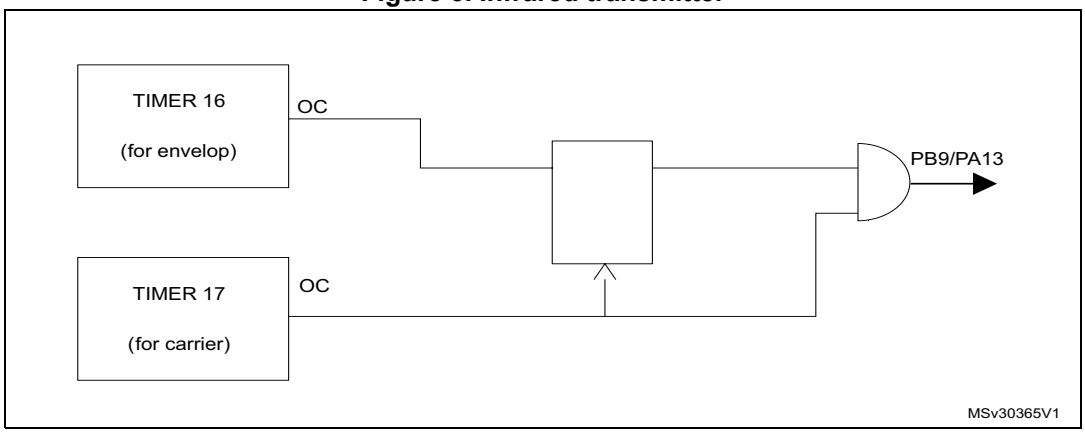

3.26 Touch sensing controller (TSC)

The STM32F303xB/STM32F303xC devices provide a simple solution for adding capacitive sensing functionality to any application. These devices offer up to 24 capacitive sensing channels distributed over 8 analog I/O groups.

Capacitive sensing technology is able to detect the presence of a finger near a sensor which is protected from direct touch by a dielectric (glass, plastic, ...). The capacitive variation introduced by the finger (or any conductive object) is measured using a proven implementation based on a surface charge transfer acquisition principle. It consists of charging the sensor capacitance and then transferring a part of the accumulated charges into a sampling capacitor until the voltage across this capacitor has reached a specific threshold. To limit the CPU bandwidth usage this acquisition is directly managed by the hardware touch sensing controller and only requires few external components to operate.

The touch sensing controller is fully supported by the STMTouch touch sensing firmware library which is free to use and allows touch sensing functionality to be implemented reliably in the end application.

Table 10. Capacitive sensing GPIOs available on STM32F303xB/STM32F303xC devices

Group	Capacitive sensing signal name	Pin name	Group	Capacitive sensing signal name	Pin name
1	TSC_G1_IO1	PA0	5	TSC_G5_IO1	PB3
	TSC_G1_IO2	PA1		TSC_G5_IO2	PB4
	TSC_G1_IO3	PA2		TSC_G5_IO3	PB6
	TSC_G1_IO4	PA3		TSC_G5_IO4	PB7
2	TSC_G2_IO1	PA4	6	TSC_G6_IO1	PB11
	TSC_G2_IO2	PA5		TSC_G6_IO2	PB12
	TSC_G2_IO3	PA6		TSC_G6_IO3	PB13
	TSC_G2_IO4	PA7		TSC_G6_IO4	PB14
3	TSC_G3_IO1	PC5	7	TSC_G7_IO1	PE2
	TSC_G3_IO2	PB0		TSC_G7_IO2	PE3
	TSC_G3_IO3	PB1		TSC_G7_IO3	PE4
	TSC_G3_IO4	PB2		TSC_G7_IO4	PE5
4	TSC_G4_IO1	PA9	8	TSC_G8_IO1	PD12
	TSC_G4_IO2	PA10		TSC_G8_IO2	PD13
	TSC_G4_IO3	PA13		TSC_G8_IO3	PD14
	TSC_G4_IO4	PA14		TSC_G8_IO4	PD15

Table 11. No. of capacitive sensing channels available on STM32F303xB/STM32F303xC devices

Analog I/O group	Number of capacitive sensing channels		
	STM32F303Vx	STM32F303Rx	STM32F303Cx
G1	3	3	3
G2	3	3	3
G3	3	3	2
G4	3	3	3
G5	3	3	3
G6	3	3	3
G7	3	0	0
G8	3	0	0
Number of capacitive sensing channels	24	18	17

3.27 Development support

3.27.1 Serial wire JTAG debug port (SWJ-DP)

The Arm SWJ-DP Interface is embedded, and is a combined JTAG and serial wire debug port that enables either a serial wire debug or a JTAG probe to be connected to the target.

The JTAG TMS and TCK pins are shared respectively with SWDIO and SWCLK and a specific sequence on the TMS pin is used to switch between JTAG-DP and SW-DP.

3.27.2 Embedded trace macrocell™

The Arm embedded trace macrocell provides a greater visibility of the instruction and data flow inside the CPU core by streaming compressed data at a very high rate from the STM32F303xB/STM32F303xC through a small number of ETM pins to an external hardware trace port analyzer (TPA) device. The TPA is connected to a host computer using a high-speed channel. Real-time instruction and data flow activity can be recorded and then formatted for display on the host computer running debugger software. TPA hardware is commercially available from common development tool vendors. It operates with third party debugger software tools.

4 Pinouts and pin description

Figure 4. STM32F303xB/STM32F303xC LQFP48 pinout

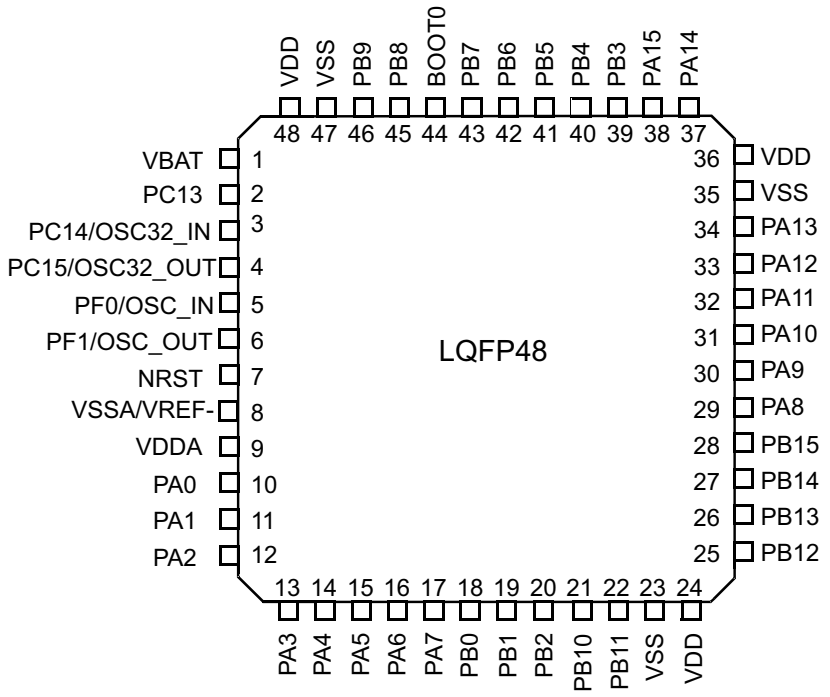

Figure 5. STM32F303xB/STM32F303xC LQFP64 pinout

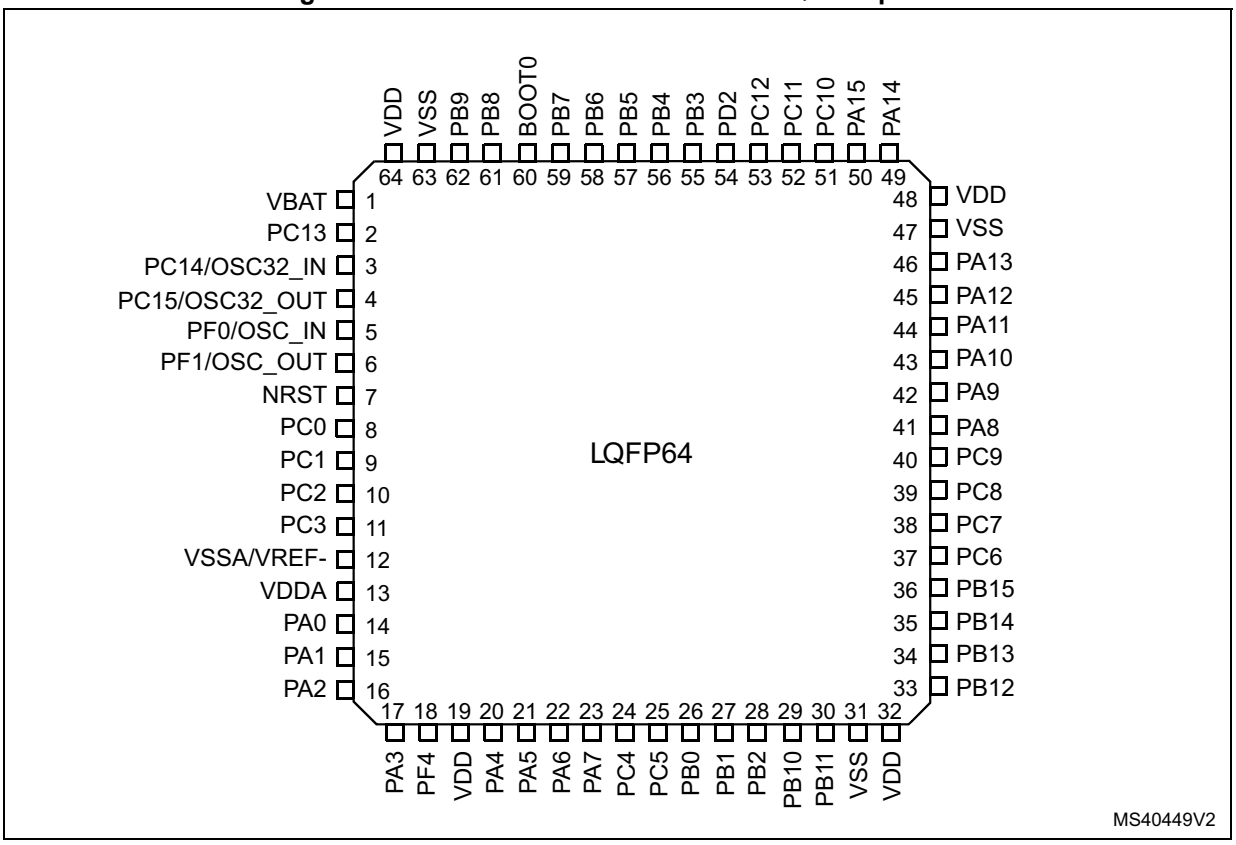

Figure 6. STM32F303xB/STM32F303xC LQFP100 pinout

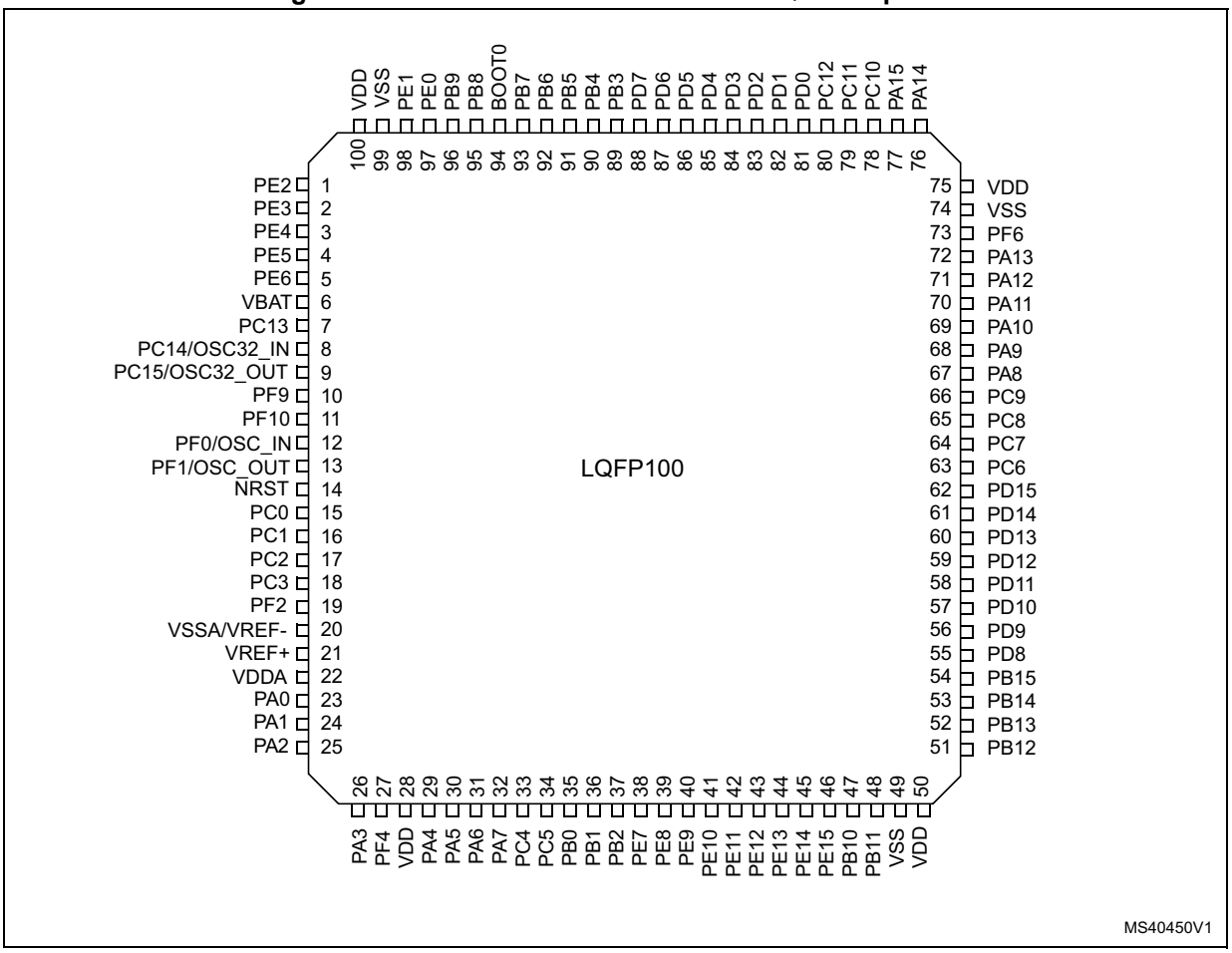

Figure 7. STM32F303xB/STM32F303xC WLCSP100 pinout

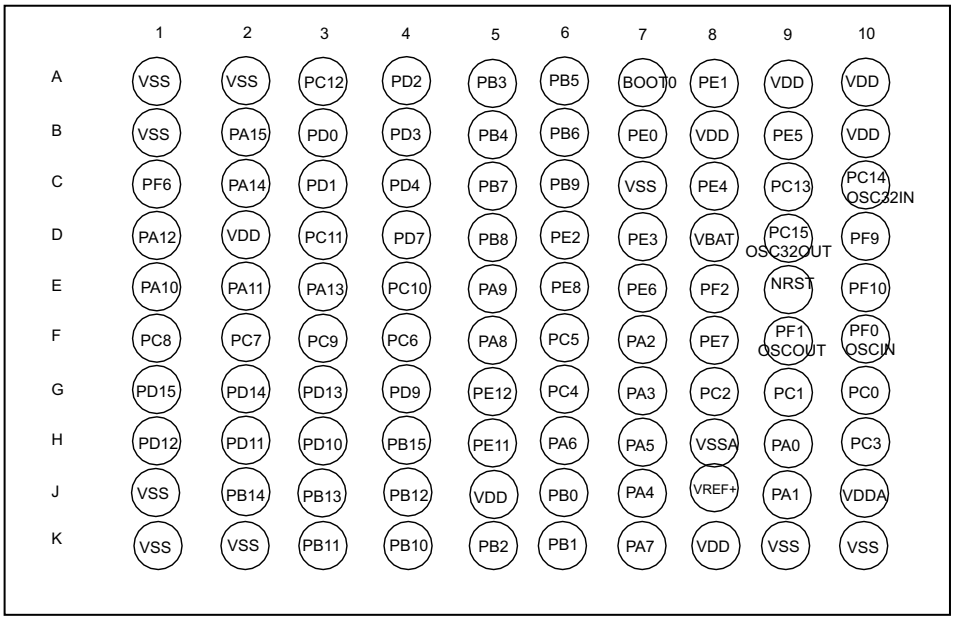

Table 12. Legend/abbreviations used in the pinout table

Name		Abbreviation	Definition
Pin name		Unless otherwise specified in brackets below the pin name, the pin function during and after reset is the same as the actual pin name	
Pin type		S	Supply pin
		I	Input only pin
		I/O	Input / output pin
I/O structure		FT	5 V tolerant I/O
		FTf	5 V tolerant I/O, FM+ capable
		TTa	3.3 V tolerant I/O directly connected to ADC
		TC	Standard 3.3V I/O
		B	Dedicated BOOT0 pin
		RST	Bidirectional reset pin with embedded weak pull-up resistor
Notes		Unless otherwise specified by a note, all I/Os are set as floating inputs during and after reset	
Pin functions	Alternate functions	Functions selected through GPIOx_AFR registers	
	Additional functions	Functions directly selected/enabled through peripheral registers	

Table 13. STM32F303xB/STM32F303xC pin definitions

Pin number				Pin name (function after reset)	Pin type	I/O structure	Notes	Pin functions	
WLCSP100	LQFP100	LQFP64	LQFP48					Alternate functions	Additional functions
D6	1	-	-	PE2	I/O	FT	(1)	TRACECK, TIM3_CH1, TSC_G7_IO1, EVENTOUT	-
D7	2	-	-	PE3	I/O	FT	(1)	TRACED0, TIM3_CH2, TSC_G7_IO2, EVENTOUT	-
C8	3	-	-	PE4	I/O	FT	(1)	TRACED1, TIM3_CH3, TSC_G7_IO3, EVENTOUT	-
B9	4	-	-	PE5	I/O	FT	(1)	TRACED2, TIM3_CH4, TSC_G7_IO4, EVENTOUT	-
E7	5	-	-	PE6	I/O	FT	(1)	TRACED3, EVENTOUT	WKUP3, RTC_TAMP3
D8	6	1	1	V_{BAT}	S	-	-	Backup power supply	

Table 13. STM32F303xB/STM32F303xC pin definitions (continued)

Pin number				Pin name (function after reset)	Pin type	I/O structure	Notes	Pin functions	
WLCSP100	LQFP100	LQFP64	LQFP48					Alternate functions	Additional functions
C9	7	2	2	PC13(2)	I/O	TC	-	TIM1_CH1N	WKUP2, RTC_TAMP1, RTC_TS, RTC_OUT
C10	8	3	3	PC14(2) OSC32_IN (PC14)	I/O	TC	-	-	OSC32_IN
D9	9	4	4	PC15(2) OSC32_ OUT (PC15)	I/O	TC	-	-	OSC32_OUT
D10	10	-	-	PF9	I/O	FT	(1)	TIM15_CH1, SPI2_SCK, EVENTOUT	-
E10	11	-	-	PF10	I/O	FT	(1)	TIM15_CH2, SPI2_SCK, EVENTOUT	-
F10	12	5	5	PF0-OSC_IN (PF0)	I/O	FTf	-	TIM1_CH3N, I2C2_SDA,	OSC_IN
F9	13	6	6	PF1-OSC_OUT (PF1)	I/O	FTf	-	I2C2_SCL	OSC_OUT
E9	14	7	7	NRST	I/O	RST		Device reset input / internal reset output (active low)	
G10	15	8	-	PC0	I/O	TTa	(1)	EVENTOUT	ADC12_IN6, COMP7_INM
G9	16	9	-	PC1	I/O	TTa	(1)	EVENTOUT	ADC12_IN7, COMP7_INP
G8	17	10	-	PC2	I/O	TTa	(1)	COMP7_OUT, EVENTOUT	ADC12_IN8
H10	18	11	-	PC3	I/O	TTa	(1)	TIM1_BKIN2, EVENTOUT	ADC12_IN9
E8	19	-	-	PF2	I/O	TTa	(1)	EVENTOUT	ADC12_IN10
H8	20	12	8	VSSA/ VREF-	S	-	-	Analog ground/Negative reference voltage	
J8	21	-	-	VREF+(3)	S	-	-	Positive reference voltage	
J10	22	-	-	VDDA	S	-	-	Analog power supply	
-	-	13	9	VDDA/ VREF+	S	-	-	Analog power supply/Positive reference voltage	
H9	23	14	10	PA0	I/O	TTa	(4)	USART2_CTS, TIM2_CH1_ETR,TIM8_BKIN, TIM8_ETR,TSC_G1_IO1, COMP1_OUT, EVENTOUT	ADC1_IN1, COMP1_INM, RTC_ TAMP2, WKUP1, COMP7_INP

Table 13. STM32F303xB/STM32F303xC pin definitions (continued)

Pin number				Pin name (function after reset)	Pin type	I/O structure	Notes	Pin functions	
WLCSP100	LQFP100	LQFP64	LQFP48					Alternate functions	Additional functions
J9	24	15	11	PA1	I/O	TTa	(4)	USART2_RTS_DE, TIM2_CH2, TSC_G1_IO2, TIM15_CH1N, RTC_REFIN, EVENTOUT	ADC1_IN2, COMP1_INP, OPAMP1_VINP, OPAMP3_VINP
F7	25	16	12	PA2	I/O	TTa	(4) (5)	USART2_TX, TIM2_CH3, TIM15_CH1, TSC_G1_IO3, COMP2_OUT, EVENTOUT	ADC1_IN3, COMP2_INM, OPAMP1_VOUT
G7	26	17	13	PA3	I/O	TTa	(4)	USART2_RX, TIM2_CH4, TIM15_CH2, TSC_G1_IO4, EVENTOUT	ADC1_IN4, OPAMP1_VINP, COMP2_INP, OPAMP1_VINM
-	27	18	-	PF4	I/O	TTa	**(1)** (4)	COMP1_OUT, EVENTOUT	ADC1_IN5
K9, K10	-	-	-	VSS	S	-	-	Digital ground	
K8	28	19	-	VDD	S	-	-	Digital power supply	
J7	29	20	14	PA4	I/O	TTa	(4) (5)	SPI1_NSS, SPI3_NSS,I2S3_WS, USART2_CK, TSC_G2_IO1, TIM3_CH2, EVENTOUT	ADC2_IN1, DAC1_OUT1, OPAMP4_VINP, COMP1_INM, COMP2_INM, COMP3_INM, COMP4_INM, COMP5_INM, COMP6_INM, COMP7_INM
H7	30	21	15	PA5	I/O	TTa	(4) (5)	SPI1_SCK, TIM2_CH1_ETR, TSC_G2_IO2, EVENTOUT	ADC2_IN2, DAC1_OUT2 OPAMP1_VINP, OPAMP2_VINM, OPAMP3_VINP COMP1_INM, COMP2_INM, COMP3_INM, COMP4_INM, COMP5_INM, COMP6_INM, COMP7_INM
H6	31	22	16	PA6	I/O	TTa	(4) (5)	SPI1_MISO, TIM3_CH1, TIM8_BKIN, TIM1_BKIN, TIM16_CH1, COMP1_OUT, TSC_G2_IO3, EVENTOUT	ADC2_IN3, OPAMP2_VOUT
K7	32	23	17	PA7	I/O	TTa	(4)	SPI1_MOSI, TIM3_CH2, TIM17_CH1, TIM1_CH1N, TIM8_CH1N, TSC_G2_IO4, COMP2_OUT, EVENTOUT	ADC2_IN4, COMP2_INP, OPAMP2_VINP, OPAMP1_VINP
G6	33	24	-	PC4	I/O	TTa	**(1)** (4)	USART1_TX, EVENTOUT	ADC2_IN5

Table 13. STM32F303xB/STM32F303xC pin definitions (continued)

Pin number				Pin name (function after reset)	Pin type	I/O structure	Notes	Pin functions	
WLCSP100	LQFP100	LQFP64	LQFP48					Alternate functions	Additional functions
F6	34	25	-	PC5	I/O	TTa	(1)	USART1_RX, TSC_G3_IO1, EVENTOUT	ADC2_IN11, OPAMP2_VINM, OPAMP1_VINM
J6	35	26	18	PB0	I/O	TTa	-	TIM3_CH3, TIM1_CH2N, TIM8_CH2N,TSC_G3_IO2, EVENTOUT	ADC3_IN12, COMP4_INP, OPAMP3_VINP, OPAMP2_VINP
K6	36	27	19	PB1	I/O	TTa	(4) (5)	TIM3_CH4, TIM1_CH3N, TIM8_CH3N, COMP4_OUT, TSC_G3_IO3, EVENTOUT	ADC3_IN1, OPAMP3_VOUT-
K5	37	28	20	PB2	I/O	TTa	-	TSC_G3_IO4, EVENTOUT	ADC2_IN12, COMP4_INM, OPAMP3_VINM
F8	38	-	-	PE7	I/O	TTa	(1)	TIM1_ETR, EVENTOUT	ADC3_IN13, COMP4_INP
E6	39	-	-	PE8	I/O	TTa	(1)	TIM1_CH1N, EVENTOUT	COMP4_INM, ADC34_IN6
-	40	-	-	PE9	I/O	TTa	(4) (1)	TIM1_CH1, EVENTOUT	ADC3_IN2
-	41	-	-	PE10	I/O	TTa	(1)	TIM1_CH2N, EVENTOUT	ADC3_IN14
H5	42	-	-	PE11	I/O	TTa	(1)	TIM1_CH2, EVENTOUT	ADC3_IN15
G5	43	-	-	PE12	I/O	TTa	(1)	TIM1_CH3N, EVENTOUT	ADC3_IN16
-	44	-	-	PE13	I/O	TTa	(1)	TIM1_CH3, EVENTOUT	ADC3_IN3
-	45	-	-	PE14	I/O	TTa	(4) (1)	TIM1_CH4, TIM1_BKIN2, EVENTOUT	ADC4_IN1
-	46	-	-	PE15	I/O	TTa	(4) (1)	USART3_RX, TIM1_BKIN, EVENTOUT	ADC4_IN2
K4	47	29	21	PB10	I/O	TTa	-	USART3_TX, TIM2_CH3, TSC_SYNC, EVENTOUT	COMP5_INM, OPAMP4_VINM, OPAMP3_VINM
K3	48	30	22	PB11	I/O	TTa	-	USART3_RX, TIM2_CH4, TSC_G6_IO1, EVENTOUT	COMP6_INP, OPAMP4_VINP
K1, J1, K2	49	31	23	VSS	S	-	-	Digital ground	
J5	50	32	24	VDD	S	-	-	Digital power supply	
J4	51	33	25	PB12	I/O	TTa	(4) (5)	SPI2_NSS,I2S2_WS,I2C2_SMBA, USART3_CK, TIM1_BKIN, TSC_G6_IO2, EVENTOUT	ADC4_IN3, COMP3_INM, OPAMP4_VOUT

Table 13. STM32F303xB/STM32F303xC pin definitions (continued)

Pin number				Pin name (function after reset)	Pin type	I/O structure	Notes	Pin functions	
WLCSP100	LQFP100	LQFP64	LQFP48					Alternate functions	Additional functions
J3	52	34	26	PB13	I/O	TTa	(4)	SPI2_SCK,I2S2_CK,USART3_CTS, TIM1_CH1N, TSC_G6_IO3, EVENTOUT	ADC3_IN5, COMP5_INP, OPAMP4_VINP, OPAMP3_VINP
J2	53	35	27	PB14	I/O	TTa	(4)	SPI2_MISO,I2S2ext_SD, USART3_RTS_DE, TIM1_CH2N, TIM15_CH1, TSC_G6_IO4, EVENTOUT	COMP3_INP, ADC4_IN4, OPAMP2_VINP
H4	54	36	28	PB15	I/O	TTa	(4)	SPI2_MOSI, I2S2_SD, TIM1_CH3N, RTC_REFIN, TIM15_CH1N, TIM15_CH2, EVENTOUT	ADC4_IN5, COMP6_INM
-	55	-	-	PD8	I/O	TTa	(1)	USART3_TX, EVENTOUT	ADC4_IN12, OPAMP4_VINM
G4	56	-	-	PD9	I/O	TTa	(1)	USART3_RX, EVENTOUT	ADC4_IN13
H3	57	-	-	PD10	I/O	TTa	(1)	USART3_CK, EVENTOUT	ADC34_IN7, COMP6_INM
H2	58	-	-	PD11	I/O	TTa	(1)	USART3_CTS, EVENTOUT	ADC34_IN8, COMP6_INP, OPAMP4_VINP
H1	59	-	-	PD12	I/O	TTa	(1)	USART3_RTS_DE, TIM4_CH1, TSC_G8_IO1, EVENTOUT	ADC34_IN9, COMP5_INP
G3	60	-	-	PD13	I/O	TTa	(1)	TIM4_CH2, TSC_G8_IO2, EVENTOUT	ADC34_IN10, COMP5_INM
G2	61	-	-	PD14	I/O	TTa	(1)	TIM4_CH3, TSC_G8_IO3, EVENTOUT	COMP3_INP, ADC34_IN11, OPAMP2_VINP
G1	62	-	-	PD15	I/O	TTa	(1)	SPI2_NSS, TIM4_CH4, TSC_G8_IO4, EVENTOUT	COMP3_INM
F4	63	37	-	PC6	I/O	FT	(1)	I2S2_MCK, COMP6_OUT, TIM8_CH1, TIM3_CH1, EVENTOUT	-
F2	64	38	-	PC7	I/O	FT	(1)	I2S3_MCK, TIM8_CH2, TIM3_CH2, COMP5_OUT, EVENTOUT	-
F1	65	39	-	PC8	I/O	FT	(1)	TIM8_CH3, TIM3_CH3, COMP3_OUT, EVENTOUT	-
F3	66	40	-	PC9	I/O	FT	(1)	TIM8_CH4, TIM8_BKIN2,TIM3_CH4, I2S_CKIN, EVENTOUT	-

Table 13. STM32F303xB/STM32F303xC pin definitions (continued)

Pin number				Pin name (function after reset)	Pin type	I/O structure	Notes	Pin functions	
WLCSP100	LQFP100	LQFP64	LQFP48					Alternate functions	Additional functions
F5	67	41	29	PA8	I/O	FT	-	I2C2_SMBA,I2S2_MCK, USART1_CK, TIM1_CH1, TIM4_ETR, MCO, COMP3_OUT, EVENTOUT	-
E5	68	42	30	PA9	I/O	FTf	-	I2C2_SCL,I2S3_MCK, USART1_TX, TIM1_CH2, TIM2_CH3, TIM15_BKIN, TSC_G4_IO1, COMP5_OUT, EVENTOUT	-
E1	69	43	31	PA10	I/O	FTf	-	I2C2_SDA, USART1_RX, TIM1_CH3, TIM2_CH4, TIM8_BKIN, TIM17_BKIN, TSC_G4_IO2, COMP6_OUT, EVENTOUT	-
E2	70	44	32	PA11	I/O	FT	-	USART1_CTS, USB_DM, CAN_RX, TIM1_CH1N, TIM1_CH4, TIM1_BKIN2, TIM4_CH1, COMP1_OUT, EVENTOUT	-
D1	71	45	33	PA12	I/O	FT	-	USART1_RTS_DE, USB_DP, CAN_TX, TIM1_CH2N, TIM1_ETR, TIM4_CH2, TIM16_CH1, COMP2_OUT, EVENTOUT	-
E3	72	46	34	PA13	I/O	FT	-	USART3_CTS, TIM4_CH3, TIM16_CH1N, TSC_G4_IO3, IR_OUT, SWDIO-JTMS, EVENTOUT	-
C1	73	-	-	PF6	I/O	FTf	(1)	I2C2_SCL, USART3_RTS_DE, TIM4_CH4, EVENTOUT	-
A1, A2, B1	74	47	35	VSS	S	-	-	Ground	
D2	75	48	36	VDD	S	-	-	Digital power supply	
C2	76	49	37	PA14	I/O	FTf	-	I2C1_SDA, USART2_TX, TIM8_CH2,TIM1_BKIN, TSC_G4_IO4, SWCLK-JTCK, EVENTOUT	-

Table 13. STM32F303xB/STM32F303xC pin definitions (continued)

Pin number				Pin name (function after reset)	Pin type	I/O structure	Notes	Pin functions	
WLCSP100	LQFP100	LQFP64	LQFP48					Alternate functions	Additional functions
B2	77	50	38	PA15	I/O	FTf	-	I2C1_SCL, SPI1_NSS, SPI3_NSS, I2S3_WS, JTDI, USART2_RX, TIM1_BKIN, TIM2_CH1_ETR, TIM8_CH1, EVENTOUT	-
E4	78	51	-	PC10	I/O	FT	(1)	SPI3_SCK, I2S3_CK, USART3_TX, UART4_TX, TIM8_CH1N, EVENTOUT	-
D3	79	52	-	PC11	I/O	FT	(1)	SPI3_MISO, I2S3ext_SD, USART3_RX, UART4_RX, TIM8_CH2N, EVENTOUT	-
A3	80	53	-	PC12	I/O	FT	(1)	SPI3_MOSI, I2S3_SD, USART3_CK, UART5_TX, TIM8_CH3N, EVENTOUT	-
B3	81	-	-	PD0	I/O	FT	(1)	CAN_RX, EVENTOUT	-
C3	82	-	-	PD1	I/O	FT	(1)	CAN_TX, TIM8_CH4, TIM8_BKIN2,EVENTOUT	-
A4	83	54	-	PD2	I/O	FT	(1)	UART5_RX, TIM3_ETR, TIM8_BKIN, EVENTOUT	-
B4	84	-	-	PD3	I/O	FT	(1)	USART2_CTS, TIM2_CH1_ETR, EVENTOUT	-
C4	85	-	-	PD4	I/O	FT	(1)	USART2_RTS_DE, TIM2_CH2, EVENTOUT	-
-	86	-	-	PD5	I/O	FT	(1)	USART2_TX, EVENTOUT	-
-	87	-	-	PD6	I/O	FT	(1)	USART2_RX, TIM2_CH4, EVENTOUT	-
D4	88	-	-	PD7	I/O	FT	(1)	USART2_CK, TIM2_CH3, EVENTOUT	-
A5	89	55	39	PB3	I/O	FT	-	SPI3_SCK, I2S3_CK, SPI1_SCK, USART2_TX, TIM2_CH2, TIM3_ETR, TIM4_ETR, TIM8_CH1N, TSC_G5_IO1, JTDO-TRACESWO, EVENTOUT	-

Table 13. STM32F303xB/STM32F303xC pin definitions (continued)

Pin number				Pin name (function after reset)	Pin type	I/O structure	Notes	Pin functions	
WLCSP100	LQFP100	LQFP64	LQFP48					Alternate functions	Additional functions
B5	90	56	40	PB4	I/O	FT	-	SPI3_MISO, I2S3ext_SD, SPI1_MISO, USART2_RX, TIM3_CH1, TIM16_CH1, TIM17_BKIN, TIM8_CH2N, TSC_G5_IO2, NJTRST, EVENTOUT	-
A6	91	57	41	PB5	I/O	FT	-	SPI3_MOSI, SPI1_MOSI, I2S3_SD, I2C1_SMBA, USART2_CK, TIM16_BKIN, TIM3_CH2, TIM8_CH3N, TIM17_CH1, EVENTOUT	-
B6	92	58	42	PB6	I/O	FTf	-	I2C1_SCL, USART1_TX, TIM16_CH1N, TIM4_CH1, TIM8_CH1,TSC_G5_IO3, TIM8_ETR, TIM8_BKIN2, EVENTOUT	-
C5	93	59	43	PB7	I/O	FTf	-	I2C1_SDA, USART1_RX, TIM3_CH4, TIM4_CH2, TIM17_CH1N, TIM8_BKIN, TSC_G5_IO4, EVENTOUT	-
A7	94	60	44	BOOT0	I	B	-	Boot memory selection	
D5	95	61	45	PB8	I/O	FTf	-	I2C1_SCL, CAN_RX, TIM16_CH1, TIM4_CH3, TIM8_CH2, TIM1_BKIN, TSC_SYNC, COMP1_OUT, EVENTOUT	-
C6	96	62	46	PB9	I/O	FTf	-	I2C1_SDA, CAN_TX, TIM17_CH1, TIM4_CH4, TIM8_CH3, IR_OUT, COMP2_OUT, EVENTOUT	-
B7	97	-	-	PE0	I/O	FT	(1)	USART1_TX, TIM4_ETR, TIM16_CH1, EVENTOUT	-
A8	98	-	-	PE1	I/O	FT	(1)	USART1_RX, TIM17_CH1, EVENTOUT	-
C7	99	63	47	VSS	S	-	-	Ground	
A9, A10, B10, B8	100	64	48	VDD	S	-	-	Digital power supply	

1. Function availability depends on the chosen device.
   When using the small packages (48 and 64 pin packages), the GPIO pins which are not present on these packages, must not be configured in analog mode.
2. PC13, PC14 and PC15 are supplied through the power switch. Since the switch sinks only a limited amount of current (3 mA), the use of GPIO PC13 to PC15 in output mode is limited:
   - The speed should not exceed 2 MHz with a maximum load of 30 pF
   - These GPIOs must not be used as current sources (e.g. to drive an LED).

   After the first backup domain power-up, PC13, PC14 and PC15 operate as GPIOs. Their function then depends on the content of the Backup registers which is not reset by the main reset. For details on how to manage these GPIOs, refer to the Battery backup domain and BKP register description sections in the RM0316 reference manual.
3. The VREF+ functionality is available only on the 100 pin package. On the 64-pin and 48-pin packages, the VREF+ is internally connected to VDDA.
4. Fast ADC channel.
5. These GPIOs offer a reduced touch sensing sensitivity. It is thus recommended to use them as sampling capacitor I/O.

Table 14. Alternate functions for port A

Port & Pin Name	AF0	AF1	AF2	AF3	AF4	AF5	AF6	AF7	AF8	AF9	AF10	AF11	AF12	AF14	AF15
PA0	-	TIM2_ CH1_ ETR	-	TSC_ G1_IO1	-	-	-	USART2_ CTS	COMP1 _OUT	TIM8_ BKIN	TIM8_ ETR	-	-	-	EVENT OUT
PA1	RTC_ REFIN	TIM2_ CH2	-	TSC_ G1_IO2	-	-	-	USART2_ RTS_DE		TIM15_ CH1N	-	-	-	-	EVENT OUT
PA2	-	TIM2_ CH3	-	TSC_ G1_IO3	-	-	-	USART2_ TX	COMP2 _OUT	TIM15_ CH1	-	-	-	-	EVENT OUT
PA3	-	TIM2_ CH4	-	TSC_ G1_IO4	-	-	-	USART2_ RX	-	TIM15_ CH2	-	-	-	-	EVENT OUT
PA4	-	-	TIM3_ CH2	TSC_ G2_IO1	-	SPI1_ NSS	SPI3_NSS, I2S3_WS	USART2_ CK	-	-	-	-	-	-	EVENT OUT
PA5	-	TIM2_ CH1_ ETR	-	TSC_ G2_IO2	-	SPI1_ SCK	-	-	-	-	-	-	-	-	EVENT OUT
PA6	-	TIM16_ CH1	TIM3_ CH1	TSC_ G2_IO3	TIM8_ BKIN	SPI1_ MISO	TIM1_BKIN	-	COMP1 _OUT	-	-	-	-	-	EVENT OUT
PA7	-	TIM17_ CH1	TIM3_ CH2	TSC_ G2_IO4	TIM8_ CH1N	SPI1_ MOSI	TIM1_CH1N	-	COMP2 _OUT	-	-	-	-	-	EVENT OUT
PA8	MCO	-	-	-	I2C2_ SMBA	I2S2_ MCK	TIM1_CH1	USART1_ CK	COMP3 _OUT	-	TIM4_ ETR	-	-	-	EVENT OUT
PA9	-	-	-	TSC_ G4_IO1	I2C2_ SCL	I2S3_ MCK	TIM1_CH2	USART1_ TX	COMP5 _OUT	TIM15_ BKIN	TIM2_ CH3	-	-	-	EVENT OUT
PA10	-	TIM17_ BKIN	-	TSC_ G4_IO2	I2C2_ SDA	-	TIM1_CH3	USART1_ RX	COMP6 _OUT	-	TIM2_ CH4	TIM8_BKIN	-	-	EVENT OUT
PA11	-	-	-	-	-	-	TIM1_CH1N	USART1_ CTS	COMP1 _OUT	CAN_RX	TIM4_ CH1	TIM1_CH4	TIM1_ BKIN2	USB_ DM	EVENT OUT

Table 14. Alternate functions for port A (continued)

Port & Pin Name	AF0	AF1	AF2	AF3	AF4	AF5	AF6	AF7	AF8	AF9	AF10	AF11	AF12	AF14	AF15
PA12	-	TIM16_ CH1	-	-	-	-	TIM1_CH2N	USART1_ RTS_DE	COMP2 _OUT	CAN_TX	TIM4_ CH2	TIM1_ETR	-	USB_ DP	EVENT OUT
PA13	SWDIO -JTMS	TIM16_ CH1N	-	TSC_ G4_IO3	-	IR_ OUT	-	USART3_ CTS	-	-	TIM4_ CH3	-	-	-	EVENT OUT
PA14	SWCLK -JTCK	-	-	TSC_ G4_IO4	I2C1_ SDA	TIM8_ CH2	TIM1_BKIN	USART2_ TX	-	-	-	-	-	-	EVENT OUT
PA15	JTDI	TIM2_ CH1_ ETR	TIM8_ CH1	-	I2C1_ SCL	SPI1_ NSS	SPI3_NSS, I2S3_WS	USART2_ RX	-	TIM1_ BKIN	-	-	-	-	EVENT OUT

Table 15. Alternate functions for port B

Port & Pin Name	AF0	AF1	AF2	AF3	AF4	AF5	AF6	AF7	AF8	AF9	AF10	AF12	AF15
PB0	-	-	TIM3_ CH3	TSC_ G3_IO2	TIM8_ CH2N	-	TIM1_CH2N	-	-	-	-	-	EVENT OUT
PB1	-	-	TIM3_ CH4	TSC_ G3_IO3	TIM8_ CH3N	-	TIM1_CH3N	-	COMP4_ OUT	-	-	-	EVENT OUT
PB2	-	-	-	TSC_ G3_IO4	-	-	-	-	-	-	-	-	EVENT OUT
PB3	JTDO-TRACES WO	TIM2_ CH2	TIM4_ ETR	TSC_ G5_IO1	TIM8_ CH1N	SPI1_ SCK	SPI3_SCK, I2S3_CK	USART2_ TX	-	-	TIM3_ ETR	-	EVENT OUT
PB4	NJTRST	TIM16_ CH1	TIM3_ CH1	TSC_ G5_IO2	TIM8_ CH2N	SPI1_ MISO	SPI3_MISO, I2S3ext_SD	USART2_ RX	-	-	TIM17_ BKIN	-	EVENT OUT
PB5	-	TIM16_ BKIN	TIM3_ CH2	TIM8_ CH3N	I2C1_ SMBA	SPI1_ MOSI	SPI3_MOSI, I2S3_SD	USART2_ CK	-	-	TIM17_ CH1	-	EVENT OUT
PB6	-	TIM16_ CH1N	TIM4_ CH1	TSC_ G5_IO3	I2C1_SCL	TIM8_CH1	TIM8_ ETR	USART1_ TX	-	-	TIM8_ BKIN2	-	EVENT OUT
PB7	-	TIM17_ CH1N	TIM4_ CH2	TSC_ G5_IO4	I2C1_ SDA	TIM8_ BKIN	-	USART1_ RX	-	-	TIM3_ CH4	-	EVENT OUT
PB8	-	TIM16_ CH1	TIM4_ CH3	TSC_ SYNC	I2C1_SCL	-	-	-	COMP1_ OUT	CAN_RX	TIM8_ CH2	TIM1_ BKIN	EVENT OUT
PB9	-	TIM17_ CH1	TIM4_ CH4		I2C1_ SDA	-	IR_OUT	-	COMP2_ OUT	CAN_TX	TIM8_ CH3	-	EVENT OUT
PB10	-	TIM2_ CH3	-	TSC_ SYNC	-	-	-	USART3_ TX	-	-	-	-	EVENT OUT
PB11	-	TIM2_ CH4	-	TSC_ G6_IO1	-	-	-	USART3_ RX	-	-	-	-	EVENT OUT
PB12	-	-	-	TSC_ G6_IO2	I2C2_ SMBA	SPI2_NSS, I2S2_WS	TIM1_ BKIN	USART3_ CK	-	-	-	-	EVENT OUT

Table 15. Alternate functions for port B (continued)

Port & Pin Name	AF0	AF1	AF2	AF3	AF4	AF5	AF6	AF7	AF8	AF9	AF10	AF12	AF15
PB13	-	-	-	TSC_ G6_IO3	-	SPI2_SCK, I2S2_CK	TIM1_ CH1N	USART3_ CTS	-	-	-	-	EVENT OUT
PB14	-	TIM15_ CH1	-	TSC_ G6_IO4	-	SPI2_MISO, I2S2ext_SD	TIM1_ CH2N	USART3_ RTS_DE	-	-	-	-	EVENT OUT
PB15	RTC_ REFIN	TIM15_ CH2	TIM15_ CH1N	-	TIM1_ CH3N	SPI2_MOSI, I2S2_SD	-	-	-	-	-	-	EVENT OUT

Table 16. Alternate functions for port C

Port & Pin Name	AF1	AF2	AF3	AF4	AF5	AF6	AF7
PC0	EVENTOUT	-	-	-	-	-	-
PC1	EVENTOUT	-	-	-	-	-	-
PC2	EVENTOUT	-	COMP7_OUT	-	-	-	-
PC3	EVENTOUT	-	-	-	-	TIM1_BKIN2	-
PC4	EVENTOUT	-	-	-	-	-	USART1_TX
PC5	EVENTOUT	-	TSC_G3_IO1	-	-	-	USART1_RX
PC6	EVENTOUT	TIM3_CH1	-	TIM8_CH1	-	I2S2_MCK	COMP6_OUT
PC7	EVENTOUT	TIM3_CH2	-	TIM8_CH2	-	I2S3_MCK	COMP5_OUT
PC8	EVENTOUT	TIM3_CH3	-	TIM8_CH3	-	-	COMP3_OUT
PC9	EVENTOUT	TIM3_CH4	-	TIM8_CH4	I2S_CKIN	TIM8_BKIN2	-
PC10	EVENTOUT	-	-	TIM8_CH1N	UART4_TX	SPI3_SCK, I2S3_CK	USART3_TX
PC11	EVENTOUT	-	-	TIM8_CH2N	UART4_RX	SPI3_MISO, I2S3ext_SD	USART3_RX
PC12	EVENTOUT	-	-	TIM8_CH3N	UART5_TX	SPI3_MOSI, I2S3_SD	USART3_CK
PC13	-	-	-	TIM1_CH1N	-	-	-
PC14	-	-	-	-	-	-	-
PC15	-	-	-	-	-	-	-

Table 17. Alternate functions for port D

Port & Pin Name	AF1	AF2	AF3	AF4	AF5	AF6	AF7
PD0	EVENTOUT	-	-	-	-	-	CAN_RX
PD1	EVENTOUT	-	-	TIM8_CH4	-	TIM8_BKIN2	CAN_TX
PD2	EVENTOUT	TIM3_ETR	-	TIM8_BKIN	UART5_RX	-	-
PD3	EVENTOUT	TIM2_CH1_ETR	-	-	-	-	USART2_CTS
PD4	EVENTOUT	TIM2_CH2	-	-	-	-	USART2_RTS_DE
PD5	EVENTOUT	-	-	-	-	-	USART2_TX
PD6	EVENTOUT	TIM2_CH4	-	-	-	-	USART2_RX
PD7	EVENTOUT	TIM2_CH3	-	-	-	-	USART2_CK
PD8	EVENTOUT	-	-	-	-	-	USART3_TX
PD9	EVENTOUT	-	-	-	-	-	USART3_RX
PD10	EVENTOUT	-	-	-	-	-	USART3_CK
PD11	EVENTOUT	-	-	-	-	-	USART3_CTS
PD12	EVENTOUT	TIM4_CH1	TSC_G8_IO1	-	-	-	USART3_RTS_DE
PD13	EVENTOUT	TIM4_CH2	TSC_G8_IO2	-	-	-	-
PD14	EVENTOUT	TIM4_CH3	TSC_G8_IO3	-	-	-	-
PD15	EVENTOUT	TIM4_CH4	TSC_G8_IO4	-	-	SPI2_NSS	-

Table 18. Alternate functions for port E

Port & Pin Name	AF0	AF1	AF2	AF3	AF4	AF6	AF7
PE0	-	EVENTOUT	TIM4_ETR	-	TIM16_CH1	-	USART1_TX
PE1	-	EVENTOUT	-	-	TIM17_CH1	-	USART1_RX
PE2	TRACECK	EVENTOUT	TIM3_CH1	TSC_G7_IO1	-	-	-
PE3	TRACED0	EVENTOUT	TIM3_CH2	TSC_G7_IO2	-	-	-
PE4	TRACED1	EVENTOUT	TIM3_CH3	TSC_G7_IO3	-	-	-
PE5	TRACED2	EVENTOUT	TIM3_CH4	TSC_G7_IO4	-	-	-
PE6	TRACED3	EVENTOUT		-	-	-	-
PE7	-	EVENTOUT	TIM1_ETR	-	-	-	-
PE8	-	EVENTOUT	TIM1_CH1N	-	-	-	-
PE9	-	EVENTOUT	TIM1_CH1	-	-	-	-
PE10	-	EVENTOUT	TIM1_CH2N	-	-	-	-
PE11	-	EVENTOUT	TIM1_CH2	-	-	-	-
PE12	-	EVENTOUT	TIM1_CH3N	-	-	-	-
PE13	-	EVENTOUT	TIM1_CH3	-	-	-	-
PE14	-	EVENTOUT	TIM1_CH4	-	-	TIM1_BKIN2	-
PE15	-	EVENTOUT	TIM1_BKIN	-	-	-	USART3_RX

Table 19. Alternate functions for port F

Port & Pin Name	AF1	AF2	AF3	AF4	AF5	AF6	AF7
PF0	-	-	-	I2C2_SDA	-	TIM1_CH3N	-
PF1	-	-	-	I2C2_SCL	-	-	-
PF2	EVENTOUT	-	-	-	-	-	-
PF4	EVENTOUT	COMP1_OUT	-	-	-	-	-
PF6	EVENTOUT	TIM4_CH4	-	I2C2_SCL	-	-	USART3_RTS_DE
PF9	EVENTOUT	-	TIM15_CH1	-	SPI2_SCK	-	-
PF10	EVENTOUT	-	TIM15_CH2	-	SPI2_SCK	-	-

5 Memory mapping

Figure 8. STM32F303xB/STM32F303xC memory map

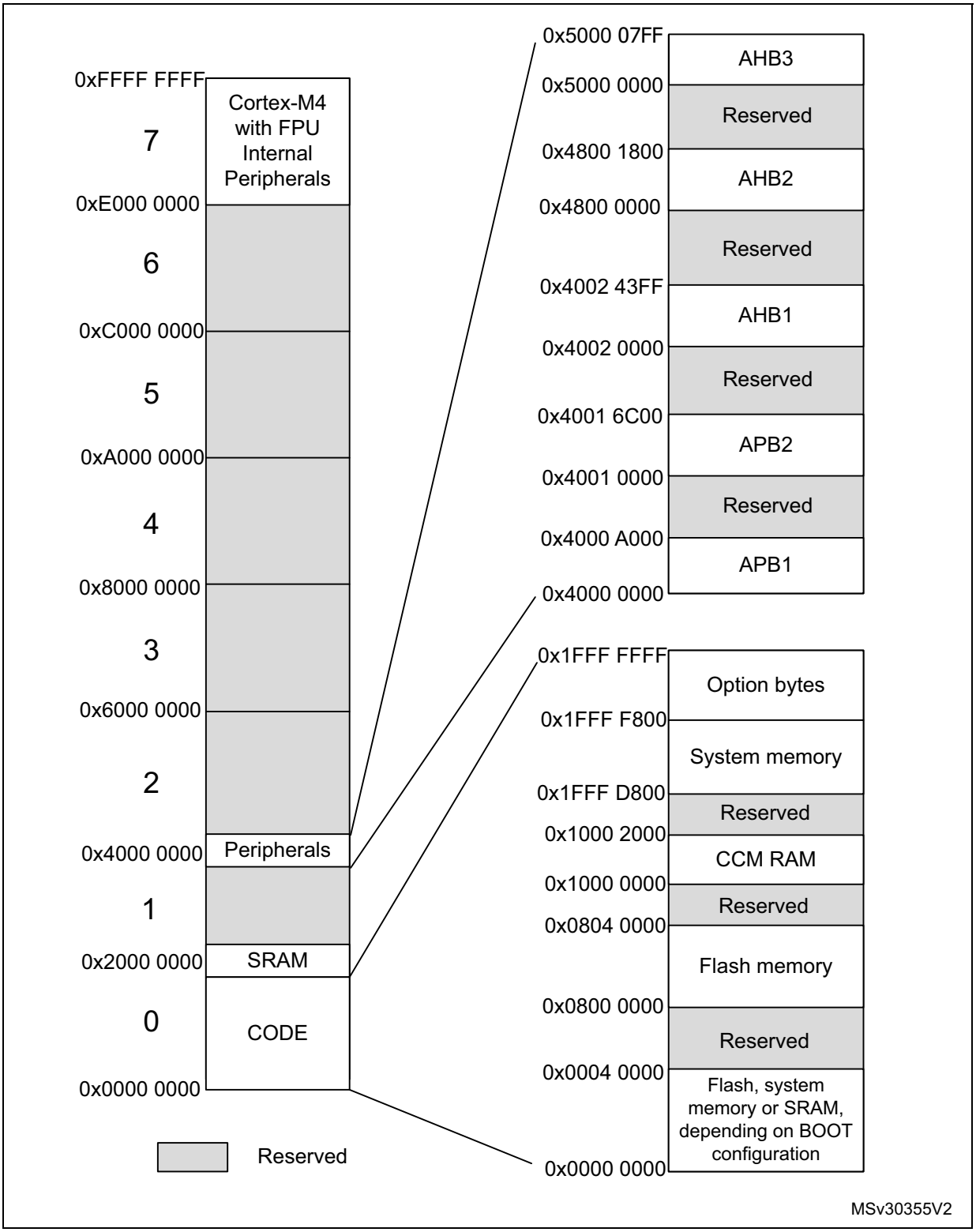

Table 20. STM32F303xB/STM32F303xC memory map, peripheral register boundary addresses(1)

Bus	Boundary address	Size (bytes)	Peripheral
AHB3	0x5000 0400 - 0x5000 07FF	1 K	ADC3 - ADC4
	0x5000 0000 - 0x5000 03FF	1 K	ADC1 - ADC2
	0x4800 1800 - 0x4FFF FFFF	~132 M	Reserved
AHB2	0x4800 1400 - 0x4800 17FF	1 K	GPIOF
	0x4800 1000 - 0x4800 13FF	1 K	GPIOE
	0x4800 0C00 - 0x4800 0FFF	1 K	GPIOD
	0x4800 0800 - 0x4800 0BFF	1 K	GPIOC
	0x4800 0400 - 0x4800 07FF	1 K	GPIOB
	0x4800 0000 - 0x4800 03FF	1 K	GPIOA
	0x4002 4400 - 0x47FF FFFF	~128 M	Reserved
AHB1	0x4002 4000 - 0x4002 43FF	1 K	TSC
	0x4002 3400 - 0x4002 3FFF	3 K	Reserved
	0x4002 3000 - 0x4002 33FF	1 K	CRC
	0x4002 2400 - 0x4002 2FFF	3 K	Reserved
	0x4002 2000 - 0x4002 23FF	1 K	Flash interface
	0x4002 1400 - 0x4002 1FFF	3 K	Reserved
	0x4002 1000 - 0x4002 13FF	1 K	RCC
	0x4002 0800 - 0x4002 0FFF	2 K	Reserved
	0x4002 0400 - 0x4002 07FF	1 K	DMA2
	0x4002 0000 - 0x4002 03FF	1 K	DMA1
	0x4001 8000 - 0x4001 FFFF	32 K	Reserved
APB2	0x4001 4C00 - 0x4001 7FFF	13 K	Reserved
	0x4001 4800 - 0x4001 4BFF	1 K	TIM17
	0x4001 4400 - 0x4001 47FF	1 K	TIM16
	0x4001 4000 - 0x4001 43FF	1 K	TIM15
	0x4001 3C00 - 0x4001 3FFF	1 K	Reserved
	0x4001 3800 - 0x4001 3BFF	1 K	USART1
	0x4001 3400 - 0x4001 37FF	1 K	TIM8
	0x4001 3000 - 0x4001 33FF	1 K	SPI1
	0x4001 2C00 - 0x4001 2FFF	1 K	TIM1
	0x4001 0800 - 0x4001 2BFF	9 K	Reserved
	0x4001 0400 - 0x4001 07FF	1 K	EXTI
	0x4001 0000 - 0x4001 03FF	1 K	SYSCFG + COMP + OPAMP

Table 20. STM32F303xB/STM32F303xC memory map, peripheral register boundary addresses(1) (continued)

Bus	Boundary address	Size (bytes)	Peripheral
	0x4000 8000 - 0x4000 FFFF	32 K	Reserved
APB1	0x4000 7800 - 0x4000 7FFF	2 K	Reserved
	0x4000 7400 - 0x4000 77FF	1 K	DAC (dual)
	0x4000 7000 - 0x4000 73FF	1 K	PWR
	0x4000 6800 - 0x4000 6FFF	2 K	Reserved
	0x4000 6400 - 0x4000 67FF	1 K	bxCAN
	0x4000 6000 - 0x4000 63FF	1 K	USB SRAM 512 bytes
	0x4000 5C00 - 0x4000 5FFF	1 K	USB device FS
	0x4000 5800 - 0x4000 5BFF	1 K	I2C2
	0x4000 5400 - 0x4000 57FF	1 K	I2C1
	0x4000 5000 - 0x4000 53FF	1 K	UART5
	0x4000 4C00 - 0x4000 4FFF	1 K	UART4
	0x4000 4800 - 0x4000 4BFF	1 K	USART3
	0x4000 4400 - 0x4000 47FF	1 K	USART2
	0x4000 4000 - 0x4000 43FF	1 K	I2S3ext
	0x4000 3C00 - 0x4000 3FFF	1 K	SPI3/I2S3
	0x4000 3800 - 0x4000 3BFF	1 K	SPI2/I2S2
	0x4000 3400 - 0x4000 37FF	1 K	I2S2ext
	0x4000 3000 - 0x4000 33FF	1 K	IWDG
	0x4000 2C00 - 0x4000 2FFF	1 K	WWDG
	0x4000 2800 - 0x4000 2BFF	1 K	RTC
	0x4000 1800 - 0x4000 27FF	4 K	Reserved
	0x4000 1400 - 0x4000 17FF	1 K	TIM7
	0x4000 1000 - 0x4000 13FF	1 K	TIM6
	0x4000 0C00 - 0x4000 0FFF	1 K	Reserved
	0x4000 0800 - 0x4000 0BFF	1 K	TIM4
	0x4000 0400 - 0x4000 07FF	1 K	TIM3
	0x4000 0000 - 0x4000 03FF	1 K	TIM2

1. The gray color is used for reserved Flash memory addresses.

6 Electrical characteristics

6.1 Parameter conditions

Unless otherwise specified, all voltages are referenced to V_{SS}.

6.1.1 Minimum and maximum values

Unless otherwise specified, the minimum and maximum values are guaranteed in the worst conditions of ambient temperature, supply voltage and frequencies by tests in production on 100% of the devices with an ambient temperature at T_A = 25 °C and T_A = $T_A$max (given by the selected temperature range).

Data based on characterization results, design simulation and/or technology characteristics are indicated in the table footnotes. Based on characterization, the minimum and maximum values refer to sample tests and represent the mean value plus or minus three times the standard deviation (mean±3σ).

6.1.2 Typical values

Unless otherwise specified, typical data are based on T_A = 25 °C, V_{DD} = V_{DDA} = 3.3 V. They are given only as design guidelines and are not tested.

Typical ADC accuracy values are determined by characterization of a batch of samples from a standard diffusion lot over the full temperature range, where 95% of the devices have an error less than or equal to the value indicated (mean±2σ).

6.1.3 Typical curves

Unless otherwise specified, all typical curves are given only as design guidelines and are not tested.

6.1.4 Loading capacitor

The loading conditions used for pin parameter measurement are shown in *Figure 9*.

6.1.5 Pin input voltage

The input voltage measurement on a pin of the device is described in *Figure 10*.

Figure 9. Pin loading conditions

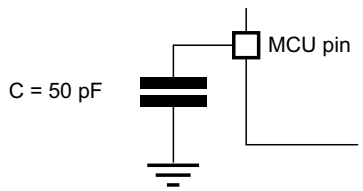

Figure 10. Pin input voltage

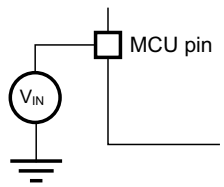

6.1.6 Power supply scheme

Figure 11. Power supply scheme

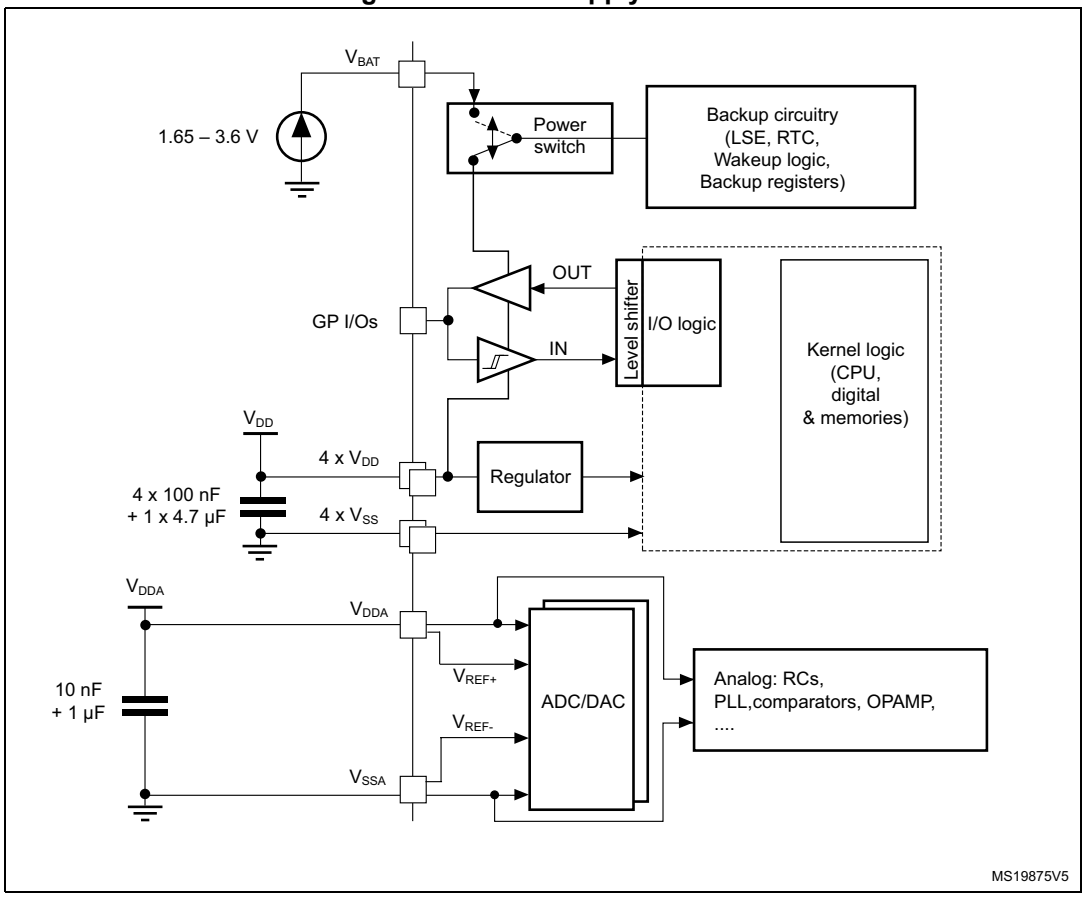

1. Dotted lines represent the internal connections on low pin count packages, joining the dedicated supply pins.

Caution: Each power supply pair (V_{DD}/V_{SS}, V_{DDA}/V_{SSA} etc..) must be decoupled with filtering ceramic capacitors as shown above. These capacitors must be placed as close as possible to, or below the appropriate pins on the underside of the PCB to ensure the good functionality of the device.

6.1.7 Current consumption measurement

Figure 12. Current consumption measurement scheme

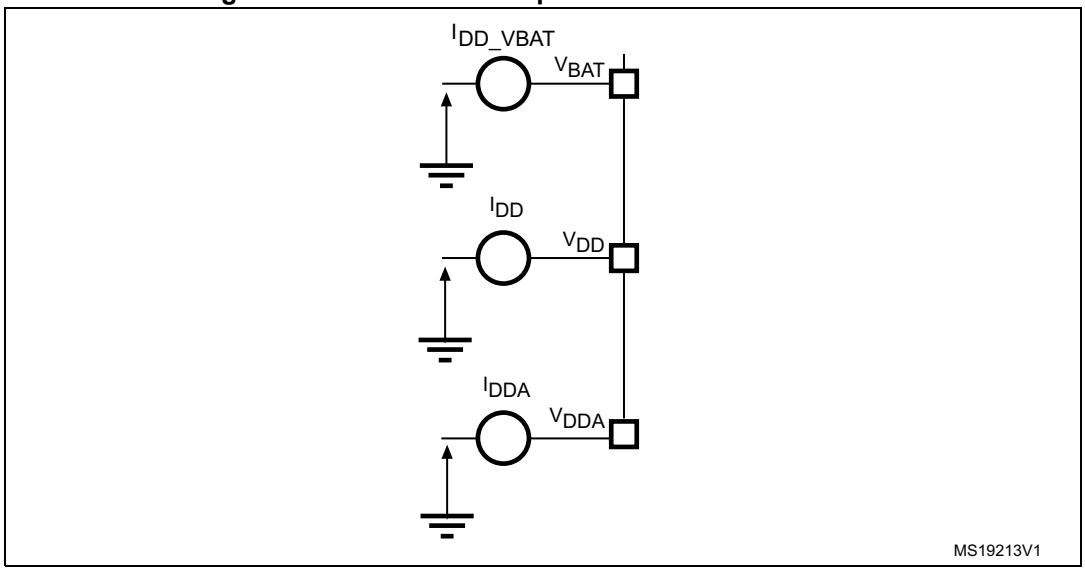

6.2 Absolute maximum ratings

Stresses above the absolute maximum ratings listed in *Table 21: Voltage characteristics*, *Table 22: Current characteristics*, and *Table 23: Thermal characteristics* may cause permanent damage to the device. These are stress ratings only and functional operation of the device at these conditions is not implied. Exposure to maximum rating conditions for extended periods may affect device reliability.

Table 21. Voltage characteristics(1)

Symbol	Ratings	Min	Max	Unit
$V_{DD}–V_{SS}$	External main supply voltage (including V_{DDA}, V_{BAT} and V_{DD})	-0.3	4.0	V
$V_{DD}–V_{DDA}$	Allowed voltage difference for $V_{DD} > V_{DDA}$	-	0.4	
$V_{REF+}–V_{DDA}$(2)	Allowed voltage difference for $V_{REF+} > V_{DDA}$	-	0.4	
V_{IN}(3)	Input voltage on FT and FTf pins	V_{SS} –0.3	V_{DD} + 4.0	
	Input voltage on TTa pins	V_{SS} –0.3	4.0	
	Input voltage on any other pin	V_{SS} –0.3	4.0	
	Input voltage on Boot0 pin	0	9	
$\|\Delta V_{DDx}\|$	Variations between different V_{DD} power pins	-	50	mV
$\|V_{SSX} – V_{SS}\|$	Variations between all the different ground pins(4)	-	50	
$V_{ESD(HBM)}$	Electrostatic discharge voltage (human body model)	see *Section 6.3.12: Electrical sensitivity characteristics*		-

1. All main power (V_{DD}, V_{DDA}) and ground (V_{SS}, V_{SSA}) pins must always be connected to the external power supply, in the permitted range. The following relationship must be respected between V_{DDA} and V_{DD}:
V_{DDA} must power on before or at the same time as V_{DD} in the power up sequence.
V_{DDA} must be greater than or equal to V_{DD}.

2. V_{REF+} must be always lower or equal than V_{DDA} ($V_{REF+} \leq V_{DDA}$). If unused then it must be connected to V_{DDA}.
3. V_{IN} maximum must always be respected. Refer to *Table 22: Current characteristics* for the maximum allowed injected current values.
4. Include VREF- pin.

Table 22. Current characteristics

Symbol	Ratings	Max.	Unit
ΣI_{VDD}	Total current into sum of all V_{DD} power lines (source)	160	mA
ΣI_{VSS}	Total current out of sum of all V_{SS} ground lines (sink)	–160	
I_{VDD}	Maximum current into each V_{DD} power line (source)(1)	100	
I_{VSS}	Maximum current out of each V_{SS} ground line (sink)(1)	–100	
$I_{IO(PIN)}$	Output current sunk by any I/O and control pin	25	
	Output current source by any I/O and control pin	–25	
$\Sigma I_{IO(PIN)}$	Total output current sunk by sum of all IOs and control pins(2)	80	
	Total output current sourced by sum of all IOs and control pins(2)	–80	
$I_{INJ(PIN)}$	Injected current on FT, FTf and B pins(3)	-5/+0	
	Injected current on TC and RST pin(4)	± 5	
	Injected current on TTa pins(5)	± 5	
$\Sigma I_{INJ(PIN)}$	Total injected current (sum of all I/O and control pins)(6)	± 25	

1. All main power (V_{DD}, V_{DDA}) and ground (V_{SS} and V_{SSA}) pins must always be connected to the external power supply, in the permitted range.
2. This current consumption must be correctly distributed over all I/Os and control pins.The total output current must not be sunk/sourced between two consecutive power supply pins referring to high pin count LQFP packages.
3. Positive injection is not possible on these I/Os and does not occur for input voltages lower than the specified maximum value.
4. A positive injection is induced by $V_{IN} > V_{DD}$ while a negative injection is induced by $V_{IN} < V_{SS}$. $I_{INJ(PIN)}$ must never be exceeded. Refer to *Table 21: Voltage characteristics* for the maximum allowed input voltage values.
5. A positive injection is induced by $V_{IN} > V_{DDA}$ while a negative injection is induced by $V_{IN} < V_{SS}$. I_{INJ}(PIN) must never be exceeded. Refer also to *Table 21: Voltage characteristics* for the maximum allowed input voltage values. Negative injection disturbs the analog performance of the device. See note (2) below *Table 70*.
6. When several inputs are submitted to a current injection, the maximum $\Sigma I_{INJ(PIN)}$ is the absolute sum of the positive and negative injected currents (instantaneous values).

Table 23. Thermal characteristics

Symbol	Ratings	Value	Unit
T_{STG}	Storage temperature range	–65 to +150	°C
T_J	Maximum junction temperature	150	°C

6.3 Operating conditions

6.3.1 General operating conditions

Table 24. General operating conditions

Symbol	Parameter	Conditions	Min	Max	Unit
f_{HCLK}	Internal AHB clock frequency	-	0	72	MHz
f_{PCLK1}	Internal APB1 clock frequency	-	0	36	
f_{PCLK2}	Internal APB2 clock frequency	-	0	72	
V_{DD}	Standard operating voltage	-	2	3.6	V
V_{DDA}	Analog operating voltage (OPAMP and DAC not used)	Must have a potential equal to or higher than V_{DD}	2	3.6	V
	Analog operating voltage (OPAMP and DAC used)		2.4	3.6	
V_{BAT}	Backup operating voltage	-	1.65	3.6	V
V_{IN}	I/O input voltage	TC I/O	–0.3	V_{DD}+0.3	V
		TTa I/O	–0.3	V_{DDA}+0.3	
		FT and FTf I/O(1)	–0.3	5.5	
		BOOT0	0	5.5	
P_D	Power dissipation at T_A = 85 °C for suffix 6 or T_A = 105 °C for suffix 7(2)	WLCSP100	-	500	mW
		LQFP100	-	488	
		LQFP64	-	444	
		LQFP48	-	364	
T_A	Ambient temperature for 6 suffix version	Maximum power dissipation	–40	85	°C
		Low-power dissipation(3)	–40	105	
	Ambient temperature for 7 suffix version	Maximum power dissipation	–40	105	°C
		Low-power dissipation(3)	–40	125	
T_J	Junction temperature range	6 suffix version	–40	105	°C
		7 suffix version	–40	125	

1. To sustain a voltage higher than V_{DD}+0.3 V, the internal pull-up/pull-down resistors must be disabled.
2. If T_A is lower, higher P_D values are allowed as long as T_J does not exceed T_{Jmax} (see *Section 7.5: Thermal characteristics*).
3. In low-power dissipation state, T_A can be extended to this range as long as T_J does not exceed T_{Jmax} (see *Section 7.5: Thermal characteristics*).

6.3.2 Operating conditions at power-up / power-down

The parameters given in *Table 25* are derived from tests performed under the ambient temperature condition summarized in *Table 24*.

Table 25. Operating conditions at power-up / power-down

Symbol	Parameter	Conditions	Min	Max	Unit
t_{VDD}	V_{DD} rise time rate	-	0	∞	µs/V
	V_{DD} fall time rate		20	∞	
t_{VDDA}	V_{DDA} rise time rate	-	0	∞	
	V_{DDA} fall time rate		20	∞	

6.3.3 Embedded reset and power control block characteristics

The parameters given in *Table 26* are derived from tests performed under ambient temperature and V_{DD} supply voltage conditions summarized in *Table 24*.

Table 26. Embedded reset and power control block characteristics

Symbol	Parameter	Conditions	Min	Typ	Max	Unit
$V_{POR/PDR}$(1)	Power on/power down reset threshold	Falling edge	1.8(2)	1.88	1.96	V
		Rising edge	1.84	1.92	2.0	V
$V_{PDRhyst}$(1)	PDR hysteresis	-	-	40	-	mV
$t_{RSTTEMPO}$(3)	POR reset temporization	-	1.5	2.5	4.5	ms

1. The PDR detector monitors V_{DD} and also V_{DDA} (if kept enabled in the option bytes). The POR detector monitors only V_{DD}.
2. The product behavior is guaranteed by design down to the minimum $V_{POR/PDR}$ value.
3. Guaranteed by design.

Table 27. Programmable voltage detector characteristics

Symbol	Parameter	Conditions	Min(1)	Typ	Max(1)	Unit
V_{PVD0}	PVD threshold 0	Rising edge	2.1	2.18	2.26	V
		Falling edge	2	2.08	2.16	
V_{PVD1}	PVD threshold 1	Rising edge	2.19	2.28	2.37	
		Falling edge	2.09	2.18	2.27	
V_{PVD2}	PVD threshold 2	Rising edge	2.28	2.38	2.48	
		Falling edge	2.18	2.28	2.38	
V_{PVD3}	PVD threshold 3	Rising edge	2.38	2.48	2.58	
		Falling edge	2.28	2.38	2.48	
V_{PVD4}	PVD threshold 4	Rising edge	2.47	2.58	2.69	
		Falling edge	2.37	2.48	2.59	
V_{PVD5}	PVD threshold 5	Rising edge	2.57	2.68	2.79	
		Falling edge	2.47	2.58	2.69	
V_{PVD6}	PVD threshold 6	Rising edge	2.66	2.78	2.9	
		Falling edge	2.56	2.68	2.8	
V_{PVD7}	PVD threshold 7	Rising edge	2.76	2.88	3	
		Falling edge	2.66	2.78	2.9	
$V_{PVDhyst}$(2)	PVD hysteresis	-	-	100	-	mV
IDD(PVD)	PVD current consumption	-	-	0.15	0.26	µA

1. Guaranteed by characterization results.
2. Guaranteed by design.

6.3.4 Embedded reference voltage

The parameters given in *Table 28* are derived from tests performed under ambient temperature and V_{DD} supply voltage conditions summarized in *Table 24*.

Table 28. Embedded internal reference voltage

Symbol	Parameter	Conditions	Min	Typ	Max	Unit
V_{REFINT}	Internal reference voltage	–40 °C < T_A < +105 °C	1.2	1.23	1.25	V
		–40 °C < T_A < +85 °C	1.2	1.23	1.24(1)	V
$T_{S_vrefint}$	ADC sampling time when reading the internal reference voltage	-	2.2	-	-	µs
V_{RERINT}	Internal reference voltage spread over the temperature range	V_{DD} = 3 V ±10 mV	-	-	10(2)	mV
T_{Coeff}	Temperature coefficient	-	-	-	100(2)	ppm/°C

1. Guaranteed by characterization results.
2. Guaranteed by design.

Table 29. Internal reference voltage calibration values

Calibration value name	Description	Memory address
V_{REFINT_CAL}	Raw data acquired at temperature of 30 °C V_{DDA}= 3.3 V	0x1FFF F7BA - 0x1FFF F7BB

6.3.5 Supply current characteristics

The current consumption is a function of several parameters and factors such as the operating voltage, ambient temperature, I/O pin loading, device software configuration, operating frequencies, I/O pin switching rate, program location in memory and executed binary code.
The current consumption is measured as described in *Figure 12: Current consumption measurement scheme*.
All Run-mode current consumption measurements given in this section are performed with a reduced code that gives a consumption equivalent to CoreMark code.

Typical and maximum current consumption

The MCU is placed under the following conditions:

- All I/O pins are in input mode with a static value at V_{DD} or V_{SS} (no load)
- All peripherals are disabled except when explicitly mentioned
- The Flash memory access time is adjusted to the f_{HCLK} frequency (0 wait state from 0 to 24 MHz,1 wait state from 24 to 48 MHz and 2 wait states from 48 to 72 MHz)
- Prefetch in ON (reminder: this bit must be set before clock setting and bus prescaling)
- When the peripherals are enabled $f_{PCLK2} = f_{HCLK}$ and $f_{PCLK1} = f_{HCLK/2}$
- When f_{HCLK} > 8 MHz, the PLL is ON and the PLL input is equal to HSI/2 (4 MHz) or HSE (8 MHz) in bypass mode.

The parameters given in *Table 30* to *Table 34* are derived from tests performed under ambient temperature and supply voltage conditions summarized in *Table 24*.

Table 30. Typical and maximum current consumption from V_{DD} supply at V_{DD} = 3.6V

Symbol	Parameter	Conditions	f_{HCLK}	All peripherals enabled				All peripherals disabled				Unit
				Typ	Max @ T_A(1)			Typ	Max @ T_A(1)			
					25 °C	85 °C	105 °C		25 °C	85 °C	105 °C	
I_{DD}	Supply current in Run mode, executing from Flash	External clock (HSE bypass)	72 MHz	61.2	65.8	67.6	68.5	27.8	30.3	30.7	31.5	mA
			64 MHz	54.7	59.1	60.2	61.1	24.6	27.2	27.6	28.3	
			48 MHz	41.7	45.1	46.2	47.2	19.2	21.1	21.4	21.8	
			32 MHz	28.1	31.5	32.5	32.7	12.9	14.6	14.8	15.3	
			24 MHz	21.4	23.7	24.4	25.2	10.0	11.4	11.4	12.1	
			8 MHz	7.4	8.4	8.6	9.4	3.6	4.1	4.4	5.0	
			1 MHz	1.3	1.6	1.8	2.6	0.8	1.0	1.2	2.1	
		Internal clock (HSI)	64 MHz	49.7	54.4	55.4	56.3	24.5	27.2	27.4	28.1	
			48 MHz	37.9	42.2	43.0	43.5	18.9	21.4	21.5	21.6	
			32 MHz	25.8	29.2	29.2	30.0	12.7	14.2	14.6	15.2	
			24 MHz	19.7	22.3	22.6	23.2	6.7	7.7	7.9	8.5	
			8 MHz	6.9	7.8	8.3	8.8	3.5	4.0	4.4	5.0	
	Supply current in Run mode, executing from RAM	External clock (HSE bypass)	72 MHz	60.8	66.2(2)	69.7	70.4(2)	27.4	31.7(2)	32.2	32.5(2)	
			64 MHz	54.3	59.1	62.2	63.3	24.3	28.3	28.7	28.8	
			48 MHz	41.0	45.6	47.3	47.9	18.3	21.6	21.9	22.1	
			32 MHz	27.6	32.4	32.4	32.9	12.3	15.0	15.2	15.4	
			24 MHz	20.8	23.9	24.3	25.0	9.3	11.3	11.4	12.0	
			8 MHz	6.9	7.8	8.7	9.0	3.1	3.7	4.2	4.9	
			1 MHz	0.9	1.2	1.5	2.3	0.4	0.6	1.0	1.8	
		Internal clock (HSI)	64 MHz	49.2	53.9	55.2	57.4	23.9	27.8	28.2	28.4	
			48 MHz	37.3	40.8	41.4	44.1	18.2	21.0	21.6	21.9	
			32 MHz	25.1	27.6	29.1	30.1	12.0	14.0	14.5	15.1	
			24 MHz	19.0	21.6	22.1	22.9	6.3	7.2	7.7	8.1	
			8 MHz	6.4	7.3	7.9	8.4	3.0	3.5	4.0	4.7	

Table 30. Typical and maximum current consumption from V_{DD} supply at V_{DD} = 3.6V (continued)

Symbol	Parameter	Conditions	f_{HCLK}	All peripherals enabled				All peripherals disabled				Unit
				Typ	Max @ T_A(1)			Typ	Max @ T_A(1)			
					25 °C	85 °C	105 °C		25 °C	85 °C	105 °C	
I_{DD}	Supply current in Sleep mode, executing from Flash or RAM	External clock (HSE bypass)	72 MHz	44.0	48.4	49.4	50.5	6.6	7.5	7.9	8.7	mA
			64 MHz	39.2	43.3	44.0	45.2	6.0	6.8	7.2	7.9	
			48 MHz	29.6	32.7	33.3	34.3	4.5	5.2	5.6	6.3	
			32 MHz	19.7	23.3	23.3	23.5	3.1	3.5	4.0	4.8	
			24 MHz	14.9	17.6	17.8	18.3	2.4	2.8	3.3	3.9	
			8 MHz	4.9	5.7	6.1	6.9	0.8	1.0	1.4	2.2	
			1 MHz	0.6	0.9	1.2	2.1	0.1	0.3	0.6	1.5	
		Internal clock (HSI)	64 MHz	34.2	38.1	39.2	40.3	5.7	6.3	6.8	7.5	
			48 MHz	25.8	28.7	29.6	30.3	4.3	4.8	5.2	5.9	
			32 MHz	17.4	19.4	19.9	20.7	2.9	3.2	3.7	4.5	
			24 MHz	13.2	15.1	15.6	15.9	1.5	1.8	2.2	2.9	
			8 MHz	4.5	5.0	5.6	6.2	0.7	0.9	1.2	2.1	

1. Guaranteed by characterization results unless otherwise specified.
2. Data based on characterization results and tested in production with code executing from RAM.

Table 31. Typical and maximum current consumption from the V_{DDA} supply

Symbol	Parameter	Conditions (1)	f_{HCLK}	V_{DDA} = 2.4 V				V_{DDA} = 3.6 V				Unit
				Typ	Max @ T_A(2)			Typ	Max @ T_A(2)			
					25 °C	85 °C	105 °C		25 °C	85 °C	105 °C	
I_{DDA}	Supply current in Run/Sleep mode, code executing from Flash or RAM	HSE bypass	72 MHz	225	276	289	297	245	302	319	329	µA
			64 MHz	198	249	261	268	216	270	284	293	
			48 MHz	149	195	204	211	159	209	222	230	
			32 MHz	102	145	152	157	110	154	162	169	
			24 MHz	80	119	124	128	86	126	131	135	
			8 MHz	2	3	4	6	3	4	5	9	
			1 MHz	2	3	5	7	3	4	6	9	
		HSI clock	64 MHz	270	323	337	344	299	354	371	381	
			48 MHz	220	269	280	286	244	293	309	318	
			32 MHz	173	218	228	233	193	239	251	257	
			24 MHz	151	194	200	204	169	211	219	225	
			8 MHz	73	97	99	103	88	105	110	116	

1. Current consumption from the V_{DDA} supply is independent of whether the peripherals are on or off. Furthermore when the PLL is off, I_{DDA} is independent from the frequency.
2. Guaranteed by characterization results.

Table 32. Typical and maximum V_{DD} consumption in Stop and Standby modes

Symbol	Parameter	Conditions	Typ @V_{DD} (V_{DD}=V_{DDA})						Max(1)			Unit
			2.0 V	2.4 V	2.7 V	3.0 V	3.3 V	3.6 V	T_A = 25 °C	T_A = 85 °C	T_A = 105 °C	
I_{DD}	Supply current in Stop mode	Regulator in run mode, all oscillators OFF	20.05	20.33	20.42	20.50	20.67	20.80	44.2(2)	350	735(2)	µA
		Regulator in low-power mode, all oscillators OFF	7.63	7.77	7.90	8.07	8.17	8.33	30.6(2)	335	720(2)	
	Supply current in Standby mode	LSI ON and IWDG ON	0.80	0.96	1.09	1.23	1.37	1.51	-	-	-	
		LSI OFF and IWDG OFF	0.60	0.74	0.83	0.93	1.02	1.11	5.0(2)	7.8	13.3(2)	

1. Guaranteed by characterization results unless otherwise specified.
2. Data based on characterization results and tested in production.

Table 33. Typical and maximum V_{DDA} consumption in Stop and Standby modes

Symbol	Parameter	Conditions		Typ @V_{DD} (V_{DD} = V_{DDA})						Max(1)			Unit
				2.0 V	2.4 V	2.7 V	3.0 V	3.3 V	3.6 V	T_A = 25 °C	T_A = 85 °C	T_A = 105 °C	
I_{DDA}	Supply current in Stop mode	V_{DDA} monitoring ON	Regulator in run mode, all oscillators OFF	1.81	1.95	2.07	2.20	2.35	2.52	3.7	5.5	8.8	µA
			Regulator in low-power mode, all oscillators OFF	1.81	1.95	2.07	2.20	2.35	2.52	3.7	5.5	8.8	
	Supply current in Standby mode		LSI ON and IWDG ON	2.22	2.42	2.59	2.78	3.0	3.24	-	-	-	
			LSI OFF and IWDG OFF	1.69	1.82	1.94	2.08	2.23	2.40	3.5	5.4	9.2	
	Supply current in Stop mode	V_{DDA} monitoring OFF	Regulator in run mode, all oscillators OFF	1.05	1.08	1.10	1.15	1.22	1.29	-	-	-	
			Regulator in low-power mode, all oscillators OFF	1.05	1.08	1.10	1.15	1.22	1.29	-	-	-	
	Supply current in Standby mode		LSI ON and IWDG ON	1.44	1.52	1.60	1.71	1.84	1.98	-	-	-	
			LSI OFF and IWDG OFF	0.93	0.95	0.98	1.02	1.08	1.15	-	-	-	

1. Guaranteed by characterization results.

The total consumption is the sum of IDD and IDDA.

Table 34. Typical and maximum current consumption from V_{BAT} supply

Symbol	Parameter	Conditions (1)	Typ @V_{BAT}								Max @V_{BAT} = 3.6 V(2)			Unit
			1.65V	1.8V	2V	2.4V	2.7V	3V	3.3V	3.6V	T_A = 25°C	T_A = 85°C	T_A = 105°C	
I_{DD_VBAT}	Backup domain supply current	LSE & RTC ON; "Xtal mode" lower driving capability; LSEDRV[1:0] = '00'	0.48	0.50	0.52	0.58	0.65	0.72	0.80	0.90	1.1	1.5	2.0	µA
		LSE & RTC ON; "Xtal mode" higher driving capability; LSEDRV[1:0] = '11'	0.83	0.86	0.90	0.98	1.03	1.10	1.20	1.30	1.5	2.2	2.9	

1. Crystal used: Abracon ABS07-120-32.768 kHz-T with a CL of 6 pF for typical values.
2. Guaranteed by characterization results.

Figure 13. Typical V_{BAT} current consumption (LSE and RTC ON/LSEDRV[1:0] = '00')

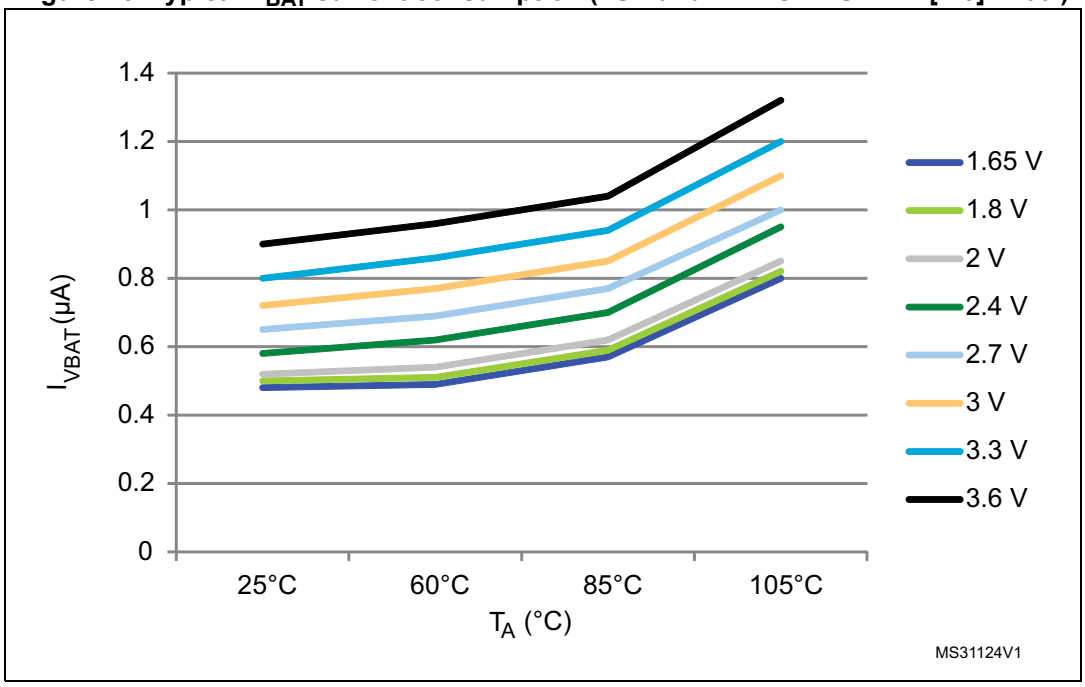

Typical current consumption

The MCU is placed under the following conditions:

- $V_{DD} = V_{DDA} = 3.3$ V
- All I/O pins available on each package are in analog input configuration
- The Flash access time is adjusted to f_{HCLK} frequency (0 wait states from 0 to 24 MHz, 1 wait state from 24 to 48 MHz and 2 wait states from 48 MHz to 72 MHz), and Flash prefetch is ON
- When the peripherals are enabled, $f_{APB1} = f_{AHB/2}$, $f_{APB2} = f_{AHB}$
- PLL is used for frequencies greater than 8 MHz
- AHB prescaler of 2, 4, 8,16 and 64 is used for the frequencies 4 MHz, 2 MHz, 1 MHz, 500 kHz and 125 kHz respectively.

Table 35. Typical current consumption in Run mode, code with data processing running from Flash

Symbol	Parameter	Conditions	f_{HCLK}	Typ		Unit
				Peripherals enabled	Peripherals disabled	
I_{DD}	Supply current in Run mode from V_{DD} supply	Running from HSE crystal clock 8 MHz, code executing from Flash	72 MHz	61.3	28.0	mA
			64 MHz	54.8	25.4	
			48 MHz	41.9	19.3	
			32 MHz	28.5	13.3	
			24 MHz	21.8	10.4	
			16 MHz	14.9	7.2	
			8 MHz	7.7	3.9	
			4 MHz	4.5	2.5	
			2 MHz	2.8	1.7	
			1 MHz	1.9	1.3	
			500 kHz	1.4	1.1	
			125 kHz	1.1	0.9	
I_{DDA}(1) (2)	Supply current in Run mode from V_{DDA} supply		72 MHz	240.3	239.5	µA
			64 MHz	210.9	210.3	
			48 MHz	155.8	155.6	
			32 MHz	105.7	105.6	
			24 MHz	82.1	82.0	
			16 MHz	58.8	58.8	
			8 MHz	2.4	2.4	
			4 MHz	2.4	2.4	
			2 MHz	2.4	2.4	
			1 MHz	2.4	2.4	
			500 kHz	2.4	2.4	
			125 kHz	2.4	2.4	

1. V_{DDA} monitoring is ON.
2. When peripherals are enabled, the power consumption of the analog part of peripherals such as ADC, DAC, Comparators, OpAmp etc. is not included. Refer to the tables of characteristics in the subsequent sections.

Table 36. Typical current consumption in Sleep mode, code running from Flash or RAM

Symbol	Parameter	Conditions	f_{HCLK}	Typ		Unit
				Peripherals enabled	Peripherals disabled	
I_{DD}	Supply current in Sleep mode from V_{DD} supply	Running from HSE crystal clock 8 MHz, code executing from Flash or RAM	72 MHz	44.1	7.0	mA
			64 MHz	39.7	6.3	
			48 MHz	30.3	4.9	
			32 MHz	20.5	3.5	
			24 MHz	15.4	2.8	
			16 MHz	10.6	2.0	
			8 MHz	5.4	1.1	
			4 MHz	3.2	1.0	
			2 MHz	2.1	0.9	
			1 MHz	1.5	0.8	
			500 kHz	1.2	0.8	
			125 kHz	1.0	0.8	
I_{DDA}(1) (2)	Supply current in Sleep mode from V_{DDA} supply		72 MHz	239.7	238.5	µA
			64 MHz	210.5	209.6	
			48 MHz	155.0	155.6	
			32 MHz	105.3	105.2	
			24 MHz	81.9	81.8	
			16 MHz	58.7	58.6	
			8 MHz	2.4	2.4	
			4 MHz	2.4	2.4	
			2 MHz	2.4	2.4	
			1 MHz	2.4	2.4	
			500 kHz	2.4	2.4	
			125 kHz	2.4	2.4	

1. V_{DDA} monitoring is ON.
2. When peripherals are enabled, the power consumption of the analog part of peripherals such as ADC, DAC, Comparators, OpAmp etc. is not included. Refer to the tables of characteristics in the subsequent sections.

I/O system current consumption

The current consumption of the I/O system has two components: static and dynamic.

I/O static current consumption

All the I/Os used as inputs with pull-up generate current consumption when the pin is externally held low. The value of this current consumption can be simply computed by using the pull-up/pull-down resistors values given in *Table 54: I/O static characteristics*.

For the output pins, any external pull-down or external load must also be considered to estimate the current consumption.

Additional I/O current consumption is due to I/Os configured as inputs if an intermediate voltage level is externally applied. This current consumption is caused by the input Schmitt trigger circuits used to discriminate the input value. Unless this specific configuration is required by the application, this supply current consumption can be avoided by configuring these I/Os in analog mode. This is notably the case of ADC input pins which should be configured as analog inputs.

Caution: Any floating input pin can also settle to an intermediate voltage level or switch inadvertently, as a result of external electromagnetic noise. To avoid current consumption related to floating pins, they must either be configured in analog mode, or forced internally to a definite digital value. This can be done either by using pull-up/down resistors or by configuring the pins in output mode.

I/O dynamic current consumption

In addition to the internal peripheral current consumption (see*Table 38: Peripheral current consumption*), the I/Os used by an application also contribute to the current consumption. When an I/O pin switches, it uses the current from the MCU supply voltage to supply the I/O pin circuitry and to charge/discharge the capacitive load (internal or external) connected to the pin:

$$I_{SW} = V_{DD} \times f_{SW} \times C$$

where

I_{SW} is the current sunk by a switching I/O to charge/discharge the capacitive load

V_{DD} is the MCU supply voltage

f_{SW} is the I/O switching frequency

C is the total capacitance seen by the I/O pin: $C = C_{INT} + C_{EXT} + C_S$

The test pin is configured in push-pull output mode and is toggled by software at a fixed frequency.

Table 37. Switching output I/O current consumption

Symbol	Parameter	Conditions[1]	I/O toggling frequency (f_{SW})	Typ	Unit
I_{SW}	I/O current consumption	V_{DD} = 3.3 V C_{ext} = 0 pF $C = C_{INT} + C_{EXT} + C_S$	2 MHz	0.90	mA
			4 MHz	0.93	
			8 MHz	1.16	
			18 MHz	1.60	
			36 MHz	2.51	
			48 MHz	2.97	
		V_{DD} = 3.3 V C_{ext} = 10 pF $C = C_{INT} + C_{EXT} + C_S$	2 MHz	0.93	
			4 MHz	1.06	
			8 MHz	1.47	
			18 MHz	2.26	
			36 MHz	3.39	
			48 MHz	5.99	
		V_{DD} = 3.3 V C_{ext} = 22 pF $C = C_{INT} + C_{EXT} + C_S$	2 MHz	1.03	
			4 MHz	1.30	
			8 MHz	1.79	
			18 MHz	3.01	
			36 MHz	5.99	
		V_{DD} = 3.3 V C_{ext} = 33 pF $C = C_{INT} + C_{EXT} + C_S$	2 MHz	1.10	
			4 MHz	1.31	
			8 MHz	2.06	
			18 MHz	3.47	
			36 MHz	8.35	
		V_{DD} = 3.3 V C_{ext} = 47 pF $C = C_{INT} + C_{EXT} + C_S$	2 MHz	1.20	
			4 MHz	1.54	
			8 MHz	2.46	
			18 MHz	4.51	
			36 MHz	9.98	

1. CS = 5 pF (estimated value).

On-chip peripheral current consumption

The MCU is placed under the following conditions:

- all I/O pins are in analog input configuration
- all peripherals are disabled unless otherwise mentioned
- the given value is calculated by measuring the current consumption
  - with all peripherals clocked off
  - with only one peripheral clocked on
- ambient operating temperature at 25°C and $V_{DD} = V_{DDA} = 3.3$ V.

Table 38. Peripheral current consumption

Peripheral	Typical consumption(1)	Unit
	I_{DD}	
BusMatrix (2)	12.6	µA/MHz
DMA1	7.6	
DMA2	6.1	
CRC	2.1	
GPIOA	10.0	
GPIOB	10.3	
GPIOC	2.2	
GPIOD	8.8	
GPIOE	3.3	
GPIOF	3.0	
TSC	5.5	
ADC1&2	17.3	
ADC3&4	18.8	
APB2-Bridge (3)	3.6	
SYSCFG	7.3	
TIM1	40.0	
SPI1	8.8	
TIM8	36.4	
USART1	23.3	
TIM15	17.1	
TIM16	10.1	
TIM17	11.0	
APB1-Bridge (3)	6.1	
TIM2	49.1	
TIM3	38.8	
TIM4	38.3	

Table 38. Peripheral current consumption (continued)

Peripheral	Typical consumption(1)	Unit
	I_{DD}	
TIM6	9.7	µA/MHz
TIM7	12.1	
WWDG	6.4	
SPI2	40.4	
SPI3	40.0	
USART2	41.9	
USART3	40.2	
UART4	36.5	
UART5	30.8	
I2C1	10.5	
I2C2	10.4	
USB	26.2	
CAN	33.4	
PWR	5.7	
DAC	15.4	

1. The power consumption of the analog part (I_{DDA}) of peripherals such as ADC, DAC, Comparators, OpAmp etc. is not included. Refer to the tables of characteristics in the subsequent sections.
2. BusMatrix is automatically active when at least one master is ON (CPU, DMA1 or DMA2).
3. The APBx bridge is automatically active when at least one peripheral is ON on the same bus.

6.3.6 Wakeup time from low-power mode

The wakeup times given in *Table 39* are measured starting from the wakeup event trigger up to the first instruction executed by the CPU:

- For Stop or Sleep mode: the wakeup event is WFE.
- WKUP1 (PA0) pin is used to wakeup from Standby, Stop and Sleep modes.

All timings are derived from tests performed under ambient temperature and V_{DD} supply voltage conditions summarized in *Table 24*.

Table 39. Low-power mode wakeup timings

Symbol	Parameter	Conditions	Typ @V_{DD}, $V_{DD} = V_{DDA}$						Max	Unit
			2.0 V	2.4 V	2.7 V	3 V	3.3 V	3.6 V		
t_{WUSTOP}	Wakeup from Stop mode	Regulator in run mode	4.1	3.9	3.8	3.7	3.6	3.5	4.5	µs
		Regulator in low-power mode	7.9	6.7	6.1	5.7	5.4	5.2	9	
$t_{WUSTANDBY}$(1)	Wakeup from Standby mode	LSI and IWDG OFF	69.2	60.3	56.4	53.7	51.7	50	100	
$t_{WUSLEEP}$	Wakeup from Sleep mode	-	6						-	CPU clock cycles

1. Guaranteed by characterization results.

6.3.7 External clock source characteristics

High-speed external user clock generated from an external source

In bypass mode the HSE oscillator is switched off and the input pin is a standard GPIO. The external clock signal has to respect the I/O characteristics in *Section 6.3.14*. However, the recommended clock input waveform is shown in *Figure 14*.

Table 40. High-speed external user clock characteristics

Symbol	Parameter	Conditions	Min	Typ	Max	Unit
f_{HSE_ext}	User external clock source frequency(1)	-	1	8	32	MHz
V_{HSEH}	OSC_IN input pin high level voltage		$0.7V_{DD}$	-	V_{DD}	V
V_{HSEL}	OSC_IN input pin low level voltage		V_{SS}	-	$0.3V_{DD}$	
$t_{w(HSEH)}$ $t_{w(HSEL)}$	OSC_IN high or low time(1)		15	-	-	ns
$t_{r(HSE)}$ $t_{f(HSE)}$	OSC_IN rise or fall time(1)		-	-	20	

1. Guaranteed by design.

Figure 14. High-speed external clock source AC timing diagram

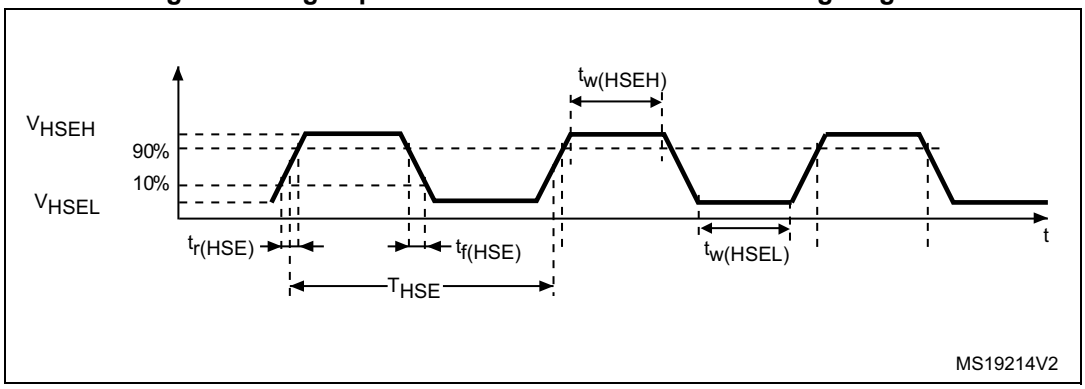

Low-speed external user clock generated from an external source

In bypass mode the LSE oscillator is switched off and the input pin is a standard GPIO. The external clock signal has to respect the I/O characteristics in *Section 6.3.14*. However, the recommended clock input waveform is shown in *Figure 15*

Table 41. Low-speed external user clock characteristics

Symbol	Parameter	Conditions	Min	Typ	Max	Unit
f_{LSE_ext}	User External clock source frequency(1)	-	-	32.768	1000	kHz
V_{LSEH}	OSC32_IN input pin high level voltage		$0.7V_{DD}$	-	V_{DD}	V
V_{LSEL}	OSC32_IN input pin low level voltage		V_{SS}	-	$0.3V_{DD}$	
$t_{w(LSEH)}$ $t_{w(LSEL)}$	OSC32_IN high or low time(1)		450	-	-	ns
$t_{r(LSE)}$ $t_{f(LSE)}$	OSC32_IN rise or fall time(1)		-	-	50	

1. Guaranteed by design.

Figure 15. Low-speed external clock source AC timing diagram

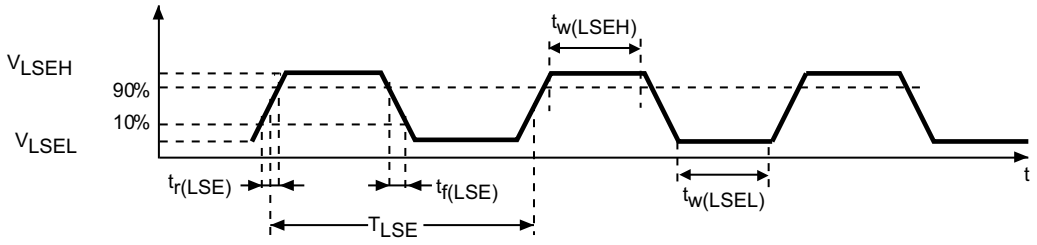

High-speed external clock generated from a crystal/ceramic resonator

The high-speed external (HSE) clock can be supplied with a 4 to 32 MHz crystal/ceramic resonator oscillator. All the information given in this paragraph are based on design simulation results obtained with typical external components specified in *Table 42*. In the application, the resonator and the load capacitors have to be placed as close as possible to the oscillator pins in order to minimize output distortion and startup stabilization time. Refer to the crystal resonator manufacturer for more details on the resonator characteristics (frequency, package, accuracy).

Table 42. HSE oscillator characteristics

Symbol	Parameter	Conditions[1]	Min[2]	Typ	Max[2]	Unit
f_{OSC_IN}	Oscillator frequency	-	4	8	32	MHz
R_F	Feedback resistor	-	-	200		kΩ
I_{DD}	HSE current consumption	During startup[3]	-	-	8.5	mA
		V_{DD}=3.3 V, Rm= 30Ω, CL=10 pF@8 MHz	-	0.4	-	
		V_{DD}=3.3 V, Rm= 45Ω, CL=10 pF@8 MHz	-	0.5	-	
		V_{DD}=3.3 V, Rm= 30Ω, CL=5 pF@32 MHz	-	0.8	-	
		V_{DD}=3.3 V, Rm= 30Ω, CL=10 pF@32 MHz	-	1	-	
		V_{DD}=3.3 V, Rm= 30Ω, CL=20 pF@32 MHz	-	1.5	-	
g_m	Oscillator transconductance	Startup	10	-	-	mA/V
$t_{SU(HSE)}$[4]	Startup time	V_{DD} is stabilized	-	2	-	ms

1. Resonator characteristics given by the crystal/ceramic resonator manufacturer.
2. Guaranteed by design.
3. This consumption level occurs during the first 2/3 of the $t_{SU(HSE)}$ startup time.
4. $t_{SU(HSE)}$ is the startup time measured from the moment it is enabled (by software) to a stabilized 8 MHz oscillation is reached. This value is measured for a standard crystal resonator and it can vary significantly with the crystal manufacturer.

For C_{L1} and C_{L2}, it is recommended to use high-quality external ceramic capacitors in the 5 pF to 25 pF range (typ.), designed for high-frequency applications, and selected to match the requirements of the crystal or resonator (see *Figure 16*). C_{L1} and C_{L2} are usually the same size. The crystal manufacturer typically specifies a load capacitance which is the series combination of C_{L1} and C_{L2}. PCB and MCU pin capacitance must be included (10 pF can be used as a rough estimate of the combined pin and board capacitance) when sizing C_{L1} and C_{L2}.

Note: For information on selecting the crystal, refer to the application note AN2867 "Oscillator design guide for ST microcontrollers" available from the ST website www.st.com.

Figure 16. Typical application with an 8 MHz crystal

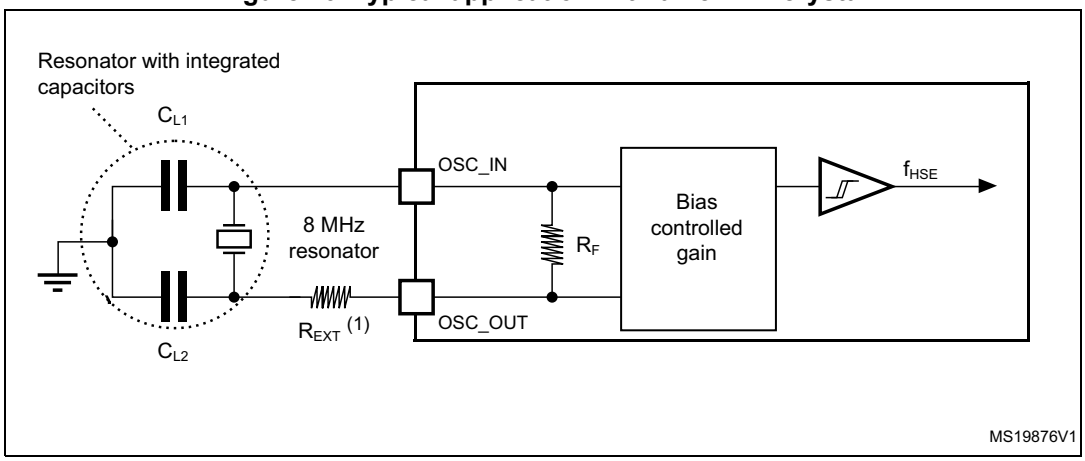

1. R_{EXT} value depends on the crystal characteristics.

Low-speed external clock generated from a crystal/ceramic resonator

The low-speed external (LSE) clock can be supplied with a 32.768 kHz crystal/ceramic resonator oscillator. All the information given in this paragraph are based on design simulation results obtained with typical external components specified in *Table 43*. In the application, the resonator and the load capacitors have to be placed as close as possible to the oscillator pins in order to minimize output distortion and startup stabilization time. Refer to the crystal resonator manufacturer for more details on the resonator characteristics (frequency, package, accuracy).

Table 43. LSE oscillator characteristics (f_{LSE} = 32.768 kHz)

Symbol	Parameter	Conditions(1)	Min(2)	Typ	Max(2)	Unit
I_{DD}	LSE current consumption	LSEDRV[1:0]=00 lower driving capability	-	0.5	0.9	µA
		LSEDRV[1:0]=10 medium low driving capability	-	-	1	
		LSEDRV[1:0]=01 medium high driving capability	-	-	1.3	
		LSEDRV[1:0]=11 higher driving capability	-	-	1.6	
g_m	Oscillator transconductance	LSEDRV[1:0]=00 lower driving capability	5	-	-	µA/V
		LSEDRV[1:0]=10 medium low driving capability	8	-	-	
		LSEDRV[1:0]=01 medium high driving capability	15	-	-	
		LSEDRV[1:0]=11 higher driving capability	25	-	-	
$t_{SU(LSE)}$(3)	Startup time	V_{DD} is stabilized	-	2	-	s

1. Refer to the note and caution paragraphs below the table, and to the application note AN2867 “Oscillator design guide for ST microcontrollers”.
2. Guaranteed by design.
3. $t_{SU(LSE)}$ is the startup time measured from the moment it is enabled (by software) to a stabilized 32.768 kHz oscillation is reached. This value is measured for a standard crystal and it can vary significantly with the crystal manufacturer.

Note: For information on selecting the crystal, refer to the application note AN2867 “Oscillator design guide for ST microcontrollers” available from the ST website www.st.com.

Figure 17. Typical application with a 32.768 kHz crystal

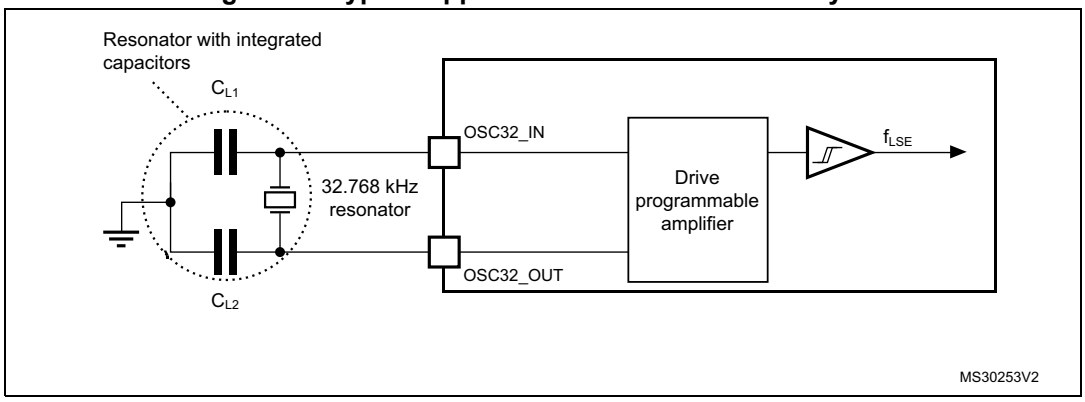

Note: An external resistor is not required between OSC32_IN and OSC32_OUT and it is forbidden to add one.

6.3.8 Internal clock source characteristics

The parameters given in *Table 44* are derived from tests performed under ambient temperature and supply voltage conditions summarized in *Table 24*.

High-speed internal (HSI) RC oscillator

Table 44. HSI oscillator characteristics(1)

Symbol	Parameter	Conditions	Min	Typ	Max	Unit
f_{HSI}	Frequency	-	-	8	-	MHz
TRIM	HSI user trimming step	-	-	-	1(2)	%
$DuCy_{(HSI)}$	Duty cycle	-	45(2)	-	55(2)	%
ACC_{HSI}	Accuracy of the HSI oscillator	T_A = -40 to 105°C	-2.8(3)	-	3.8(3)	%
		T_A = -10 to 85°C	-1.9(3)	-	2.3(3)	
		T_A = 0 to 85°C	-1.9(3)	-	2(3)	
		T_A = 0 to 70°C	-1.3(3)	-	2(3)	
		T_A = 0 to 55°C	-1(3)	-	2(3)	
		T_A = 25°C(4)	-1	-	1	
$t_{su(HSI)}$	HSI oscillator startup time	-	1(2)	-	2(2)	µs
$I_{DDA(HSI)}$	HSI oscillator power consumption	-	-	80	100(2)	µA

1. V_{DDA} = 3.3 V, T_A = –40 to 105 °C unless otherwise specified.
2. Guaranteed by design.
3. Guaranteed by characterization results.
4. Factory calibrated, parts not soldered.

Figure 18. HSI oscillator accuracy characterization results for soldered parts

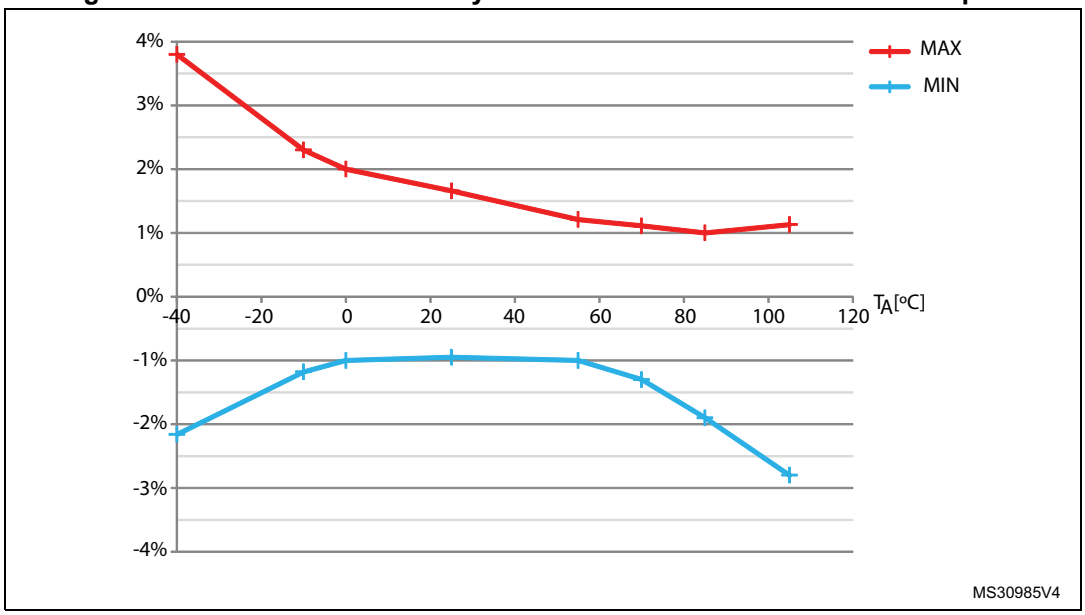

Low-speed internal (LSI) RC oscillator

Table 45. LSI oscillator characteristics(1)

Symbol	Parameter	Min	Typ	Max	Unit
f_{LSI}	Frequency	30	40	50	kHz
$t_{su(LSI)}$(2)	LSI oscillator startup time	-	-	85	µs
$I_{DD(LSI)}$(2)	LSI oscillator power consumption	-	0.75	1.2	µA

1. V_{DDA} = 3.3 V, T_A = –40 to 105 °C unless otherwise specified.
2. Guaranteed by design.

6.3.9 PLL characteristics

The parameters given in *Table 46* are derived from tests performed under ambient temperature and supply voltage conditions summarized in *Table 24*.

Table 46. PLL characteristics

Symbol	Parameter	Value			Unit
		Min	Typ	Max	
f_{PLL_IN}	PLL input clock(1)	1(2)	-	24(2)	MHz
	PLL input clock duty cycle	40(2)	-	60(2)	%
f_{PLL_OUT}	PLL multiplier output clock	16(2)	-	72	MHz
t_{LOCK}	PLL lock time	-	-	200(2)	µs
Jitter	Cycle-to-cycle jitter	-	-	300(2)	ps

1. Take care of using the appropriate multiplier factors so as to have PLL input clock values compatible with the range defined by f_{PLL_OUT}.
2. Guaranteed by design.

6.3.10 Memory characteristics

Flash memory

The characteristics are given at T_A = –40 to 105 °C unless otherwise specified.

Table 47. Flash memory characteristics

Symbol	Parameter	Conditions	Min	Typ	Max(1)	Unit
t_{prog}	16-bit programming time	T_A = –40 to +105 °C	40	53.5	60	µs
t_{ERASE}	Page (2 KB) erase time	T_A = –40 to +105 °C	20	-	40	ms
t_{ME}	Mass erase time	T_A = –40 to +105 °C	20	-	40	ms
I_{DD}	Supply current	Write mode	-	-	10	mA
		Erase mode	-	-	12	mA

1. Guaranteed by design.

Table 48. Flash memory endurance and data retention

Symbol	Parameter	Conditions	Value	Unit
			Min(1)	
N_{END}	Endurance	T_A = –40 to +85 °C (6 suffix versions) T_A = –40 to +105 °C (7 suffix versions)	10	kcycles
t_{RET}	Data retention	1 kcycle(2) at T_A = 85 °C	30	Years
		1 kcycle(2) at T_A = 105 °C	10	
		10 kcycles(2) at T_A = 55 °C	20	

1. Guaranteed by characterization results.
2. Cycling performed over the whole temperature range.

6.3.11 EMC characteristics

Susceptibility tests are performed on a sample basis during device characterization.

Functional EMS (electromagnetic susceptibility)

While a simple application is executed on the device (toggling 2 LEDs through I/O ports). the device is stressed by two electromagnetic events until a failure occurs. The failure is indicated by the LEDs:

- **Electrostatic discharge (ESD)** (positive and negative) is applied to all device pins until a functional disturbance occurs. This test is compliant with the IEC 61000-4-2 standard.
- **FTB**: A Burst of Fast Transient voltage (positive and negative) is applied to V_{DD} and V_{SS} through a 100 pF capacitor, until a functional disturbance occurs. This test is compliant with the IEC 61000-4-4 standard.

A device reset allows normal operations to be resumed.

The test results are given in *Table 49*. They are based on the EMS levels and classes defined in the application note AN1709.

Table 49. EMS characteristics

Symbol	Parameter	Conditions	Level/ Class
V_{FESD}	Voltage limits to be applied on any I/O pin to induce a functional disturbance	V_{DD} = 3.3 V, LQFP100, T_A = +25°C, f_{HCLK} = 72 MHz conforms to IEC 61000-4-2	3B
V_{EFTB}	Fast transient voltage burst limits to be applied through 100 pF on V_{DD} and V_{SS} pins to induce a functional disturbance	V_{DD} = 3.3 V, LQFP100, T_A = +25°C, f_{HCLK} = 72 MHz conforms to IEC 61000-4-4	4A

Designing hardened software to avoid noise problems

EMC characterization and optimization are performed at component level with a typical application environment and simplified MCU software. It should be noted that good EMC performance is highly dependent on the user application and the software in particular.

Therefore it is recommended that the user applies EMC software optimization and prequalification tests in relation with the EMC level requested for his application.

Software recommendations

The software flowchart must include the management of runaway conditions such as:

- Corrupted program counter
- Unexpected reset
- Critical Data corruption (control registers...)

Prequalification trials

Most of the common failures (unexpected reset and program counter corruption) can be reproduced by manually forcing a low state on the NRST pin or the Oscillator pins for 1 second.

To complete these trials, ESD stress can be applied directly on the device, over the range of specification values. When unexpected behavior is detected, the software can be hardened to prevent unrecoverable errors occurring (see application note AN1015).

Electromagnetic Interference (EMI)

The electromagnetic field emitted by the device are monitored while a simple application is executed (toggling 2 LEDs through the I/O ports). This emission test is compliant with IEC 61967-2 standard which specifies the test board and the pin loading.

Table 50. EMI characteristics

Symbol	Parameter	Conditions	Monitored frequency band	Max vs. [f_{HSE}/f_{HCLK}]	Unit
				8/72 MHz	
S_{EMI}	Peak level	V_{DD} = 3.6 V, T_A = 25 °C, LQFP100 package compliant with IEC 61967-2	0.1 to 30 MHz	**7**	dBµV
			30 to 130 MHz	**20**	
			130 MHz to 1GHz	**27**	
			SAE EMI Level	**4**	-

6.3.12 Electrical sensitivity characteristics

Based on three different tests (ESD, LU) using specific measurement methods, the device is stressed in order to determine its performance in terms of electrical sensitivity.

Electrostatic discharge (ESD)

Electrostatic discharges (a positive then a negative pulse separated by 1 second) are applied to the pins of each sample according to each pin combination. The sample size depends on the number of supply pins in the device (3 parts × (n+1) supply pins). This test conforms to the JESD22-A114, ANSI/ESD STM5.3.1 standard.

Table 51. ESD absolute maximum ratings

Symbol	Ratings	Conditions	Packages	Class	Maximum value(1)	Unit
$V_{ESD(HBM)}$	Electrostatic discharge voltage (human body model)	T_A = +25 °C, conforming to ANSI/ESDA/JEDEC JS-001	All	2	2000	V
$V_{ESD(CDM)}$	Electrostatic discharge voltage (charge device model)	T_A = +25 °C, conforming to ANSI/ESDA/JEDEC JS-002	All	C2a	500	

1. Guaranteed by characterization results.

Static latch-up

Two complementary static tests are required on six parts to assess the latch-up performance:

- A supply overvoltage is applied to each power supply pin
- A current injection is applied to each input, output and configurable I/O pin

These tests are compliant with EIA/JESD 78A IC latch-up standard.

Table 52. Electrical sensitivities

Symbol	Parameter	Conditions	Class
LU	Static latch-up class	T_A = +105 °C conforming to JESD78A	II level A

6.3.13 I/O current injection characteristics

As a general rule, current injection to the I/O pins, due to external voltage below V_{SS} or above V_{DD} (for standard, 3 V-capable I/O pins) should be avoided during normal product operation. However, in order to give an indication of the robustness of the microcontroller in cases when abnormal injection accidentally happens, susceptibility tests are performed on a sample basis during device characterization.

Functional susceptibility to I/O current injection

While a simple application is executed on the device, the device is stressed by injecting current into the I/O pins programmed in floating input mode. While current is injected into the I/O pin, one at a time, the device is checked for functional failures.

The failure is indicated by an out of range parameter: ADC error above a certain limit (higher than 5 LSB TUE), out of conventional limits of induced leakage current on adjacent pins (out of –5 µA/+0 µA range), or other functional failure (for example reset occurrence or oscillator frequency deviation).

The test results are given in *Table 53*.

Table 53. I/O current injection susceptibility

Symbol	Description	Functional susceptibility		Unit
		Negative injection	Positive injection	
I_{INJ}	Injected current on BOOT0	– 0	NA	mA
	Injected current on PC0, PC1, PC2, PC3, PF2, PA0, PA1, PA2, PA3, PF4, PA4, PA5, PA6, PA7, PC4, PC5, PB2 with induced leakage current on other pins from this group less than -50 µA	– 5	-	
	Injected current on PB0, PB1, PE7, PE8, PE9, PE10, PE11, PE12, PE13, PE14, PE15, PB12, PB13, PB14, PB15, PD8, PD9, PD10, PD11, PD12, PD13, PD14 with induced leakage current on other pins from this group less than -50 µA	– 5	-	
	Injected current on PC0, PC1, PC2, PC3, PF2, PA0, PA1, PA2, PA3, PF4, PA4, PA5, PA6, PA7, PC4, PC5, PB2, PB0, PB1, PE7, PE8, PE9, PE10, PE11, PE12, PE13, PE14, PE15, PB12, PB13, PB14, PB15, PD8, PD9, PD10, PD11, PD12, PD13, PD14 with induced leakage current on other pins from this group less than 400 µA	-	+5	
	Injected current on any other FT and FTf pins	– 5	NA	
	Injected current on any other pins	– 5	+5	

Note: It is recommended to add a Schottky diode (pin to ground) to analog pins which may potentially inject negative currents.

6.3.14 I/O port characteristics

General input/output characteristics

Unless otherwise specified, the parameters given in *Table 54* are derived from tests performed under the conditions summarized in *Table 24*. All I/Os are CMOS and TTL compliant.

Table 54. I/O static characteristics

Symbol	Parameter	Conditions	Min	Typ	Max	Unit
V_{IL}	Low level input voltage	TC and TTa I/O	-	-	0.3 V_{DD}+0.07 (1)	V
		FT and FTf I/O	-	-	0.475 V_{DD}-0.2 (1)	
		BOOT0	-	-	0.3 V_{DD}–0.3 (1)	
		All I/Os except BOOT0	-	-	0.3 V_{DD} (2)	
V_{IH}	High level input voltage	TC and TTa I/O	0.445 V_{DD}+0.398 (1)	-	-	
		FT and FTf I/O	0.5 V_{DD}+0.2 (1)	-	-	
		BOOT0	0.2 V_{DD}+0.95 (1)	-	-	
		All I/Os except BOOT0	0.7 V_{DD} (2)	-	-	
V_{hys}	Schmitt trigger hysteresis	TC and TTa I/O	-	200 (1)	-	mV
		FT and FTf I/O	-	100 (1)	-	
		BOOT0	-	300 (1)	-	
I_{lkg}	Input leakage current (3)	TC, FT and FTf I/O TTa I/O in digital mode $V_{SS} \leq V_{IN} \leq V_{DD}$	-	-	±0.1	µA
		TTa I/O in digital mode $V_{DD} \leq V_{IN} \leq V_{DDA}$	-	-	1	
		TTa I/O in analog mode $V_{SS} \leq V_{IN} \leq V_{DDA}$	-	-	±0.2	
		FT and FTf I/O(4) $V_{DD} \leq V_{IN} \leq 5$ V	-	-	10	
R_{PU}	Weak pull-up equivalent resistor(5)	$V_{IN} = V_{SS}$	25	40	55	kΩ
R_{PD}	Weak pull-down equivalent resistor(5)	$V_{IN} = V_{DD}$	25	40	55	kΩ
C_{IO}	I/O pin capacitance	-	-	5	-	pF

1. Data based on design simulation.
2. Tested in production.
3. Leakage could be higher than the maximum value. if negative current is injected on adjacent pins. Refer to *Table 53: I/O current injection susceptibility*.
4. To sustain a voltage higher than V_{DD} +0.3 V, the internal pull-up/pull-down resistors must be disabled.
5. Pull-up and pull-down resistors are designed with a true resistance in series with a switchable PMOS/NMOS. This PMOS/NMOS contribution to the series resistance is minimum (~10% order).

All I/Os are CMOS and TTL compliant (no software configuration required). Their characteristics cover more than the strict CMOS-technology or TTL parameters. The coverage of these requirements is shown in *Figure 19* and *Figure 20* for standard I/Os.

Figure 19. TC and TTa I/O input characteristics - CMOS port

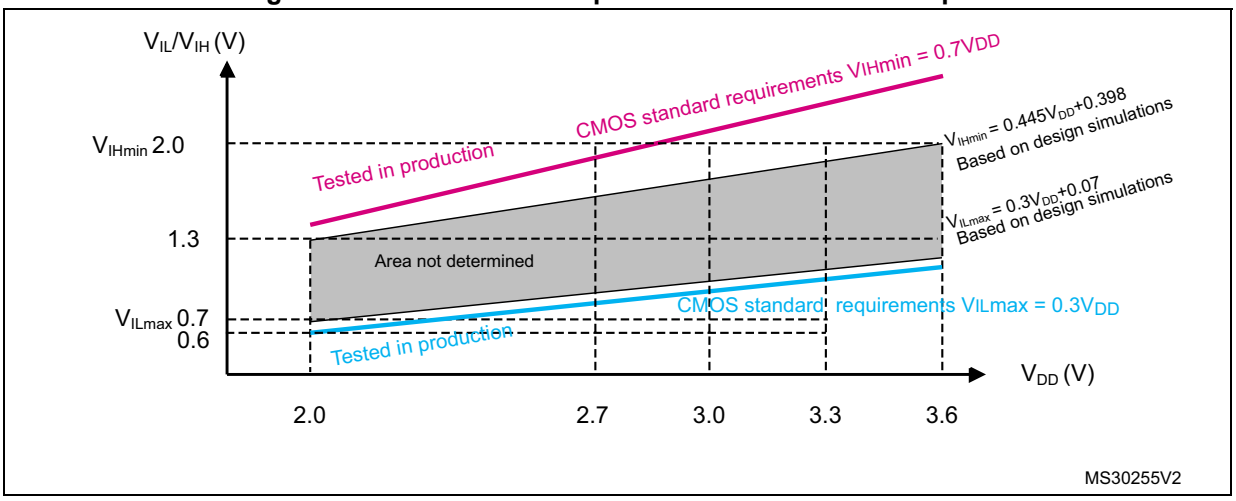

Figure 20. TC and TTa I/O input characteristics - TTL port

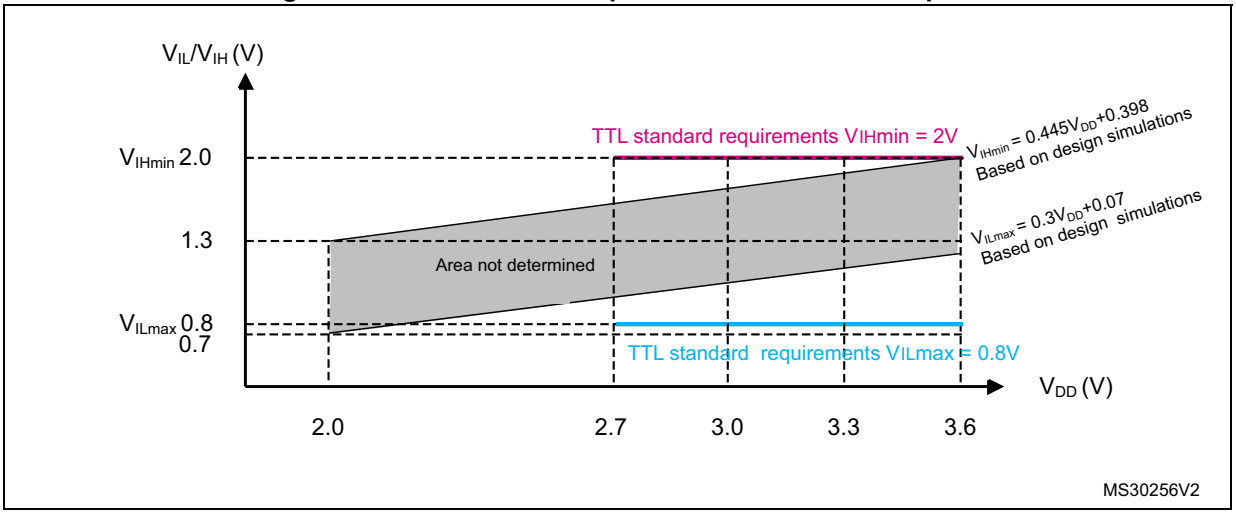

Figure 21. Five volt tolerant (FT and FTf) I/O input characteristics - CMOS port

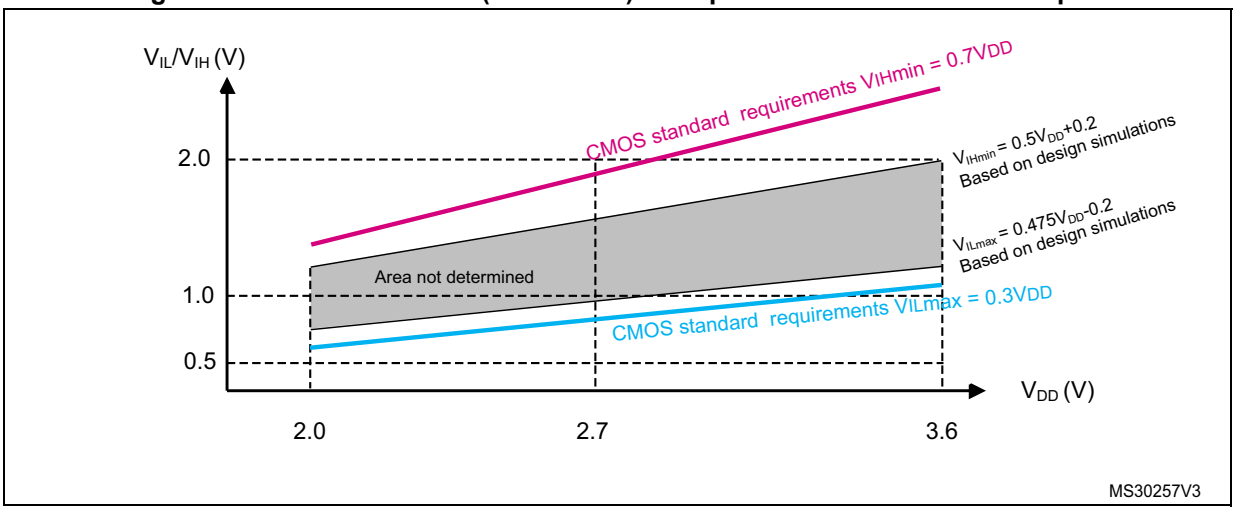

Figure 22. Five volt tolerant (FT and FTf) I/O input characteristics - TTL port

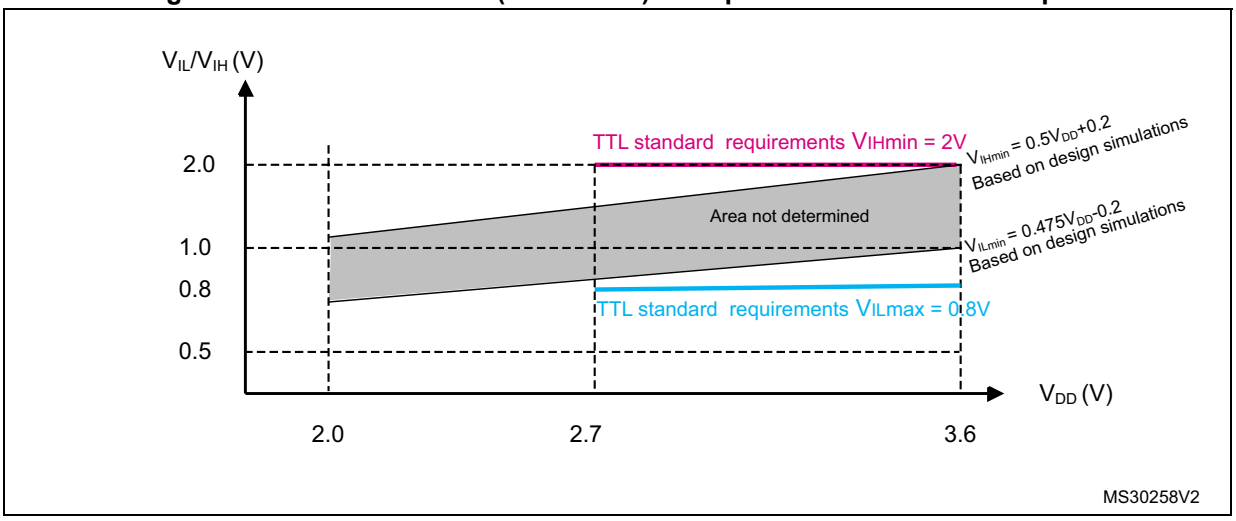

Output driving current

The GPIOs (general purpose input/outputs) can sink or source up to +/-8 mA, and sink or source up to +/- 20 mA (with a relaxed V_{OL}/V_{OH}).

In the user application, the number of I/O pins which can drive current must be limited to respect the absolute maximum rating specified in *Section 6.2*:

- The sum of the currents sourced by all the I/Os on $V_{DD,}$ plus the maximum Run consumption of the MCU sourced on $V_{DD,}$ cannot exceed the absolute maximum rating ΣI_{VDD} (see *Table 22*).
- The sum of the currents sunk by all the I/Os on V_{SS} plus the maximum Run consumption of the MCU sunk on V_{SS} cannot exceed the absolute maximum rating ΣI_{VSS} (see *Table 22*).

Output voltage levels

Unless otherwise specified, the parameters given in *Table 55* are derived from tests performed under ambient temperature and V_{DD} supply voltage conditions summarized in *Table 24*. All I/Os (FT, TTa and TC unless otherwise specified) are CMOS and TTL compliant.

Table 55. Output voltage characteristics

Symbol	Parameter	Conditions	Min	Max	Unit
V_{OL}(1)	Output low level voltage for an I/O pin	CMOS port(2) I_{IO} = +8 mA 2.7 V < V_{DD} < 3.6 V	-	0.4	V
V_{OH}(3)	Output high level voltage for an I/O pin		V_{DD}–0.4	-	
V_{OL} (1)	Output low level voltage for an I/O pin	TTL port(2) I_{IO} = +8 mA 2.7 V < V_{DD} < 3.6 V	-	0.4	
V_{OH} (3)	Output high level voltage for an I/O pin		2.4	-	
V_{OL}(1)(4)	Output low level voltage for an I/O pin	I_{IO} = +20 mA 2.7 V < V_{DD} < 3.6 V	-	1.3	
V_{OH}(3)(4)	Output high level voltage for an I/O pin		V_{DD}–1.3	-	
V_{OL}(1)(4)	Output low level voltage for an I/O pin	I_{IO} = +6 mA 2 V < V_{DD} < 2.7 V	-	0.4	
V_{OH}(3)(4)	Output high level voltage for an I/O pin		V_{DD}–0.4	-	
V_{OLFM+}(1)(4)	Output low level voltage for an FTf I/O pin in FM+ mode	I_{IO} = +20 mA 2.7 V < V_{DD} < 3.6 V	-	0.4	

1. The I_{IO} current sunk by the device must always respect the absolute maximum rating specified in *Table 22* and the sum of I_{IO} (I/O ports and control pins) must not exceed $\Sigma I_{IO(PIN)}$.
2. TTL and CMOS outputs are compatible with JEDEC standards JESD36 and JESD52.
3. The I_{IO} current sourced by the device must always respect the absolute maximum rating specified in *Table 22* and the sum of I_{IO} (I/O ports and control pins) must not exceed $\Sigma I_{IO(PIN)}$.
4. Data based on design simulation.

Input/output AC characteristics

The definition and values of input/output AC characteristics are given in *Figure 23* and *Table 56*, respectively.

Unless otherwise specified, the parameters given are derived from tests performed under ambient temperature and V_{DD} supply voltage conditions summarized in *Table 24*.

Table 56. I/O AC characteristics(1)

OSPEEDRy [1:0] value(1)	Symbol	Parameter	Conditions	Min	Max	Unit
x0	$f_{max(IO)out}$	Maximum frequency(2)	C_L = 50 pF, V_{DD} = 2 V to 3.6 V	-	2(3)	MHz
	$t_{f(IO)out}$	Output high to low level fall time	C_L = 50 pF, V_{DD} = 2 V to 3.6 V	-	125(3)	ns
	$t_{r(IO)out}$	Output low to high level rise time		-	125(3)	
01	$f_{max(IO)out}$	Maximum frequency(2)	C_L = 50 pF, V_{DD} = 2 V to 3.6 V	-	10(3)	MHz
	$t_{f(IO)out}$	Output high to low level fall time	C_L = 50 pF, V_{DD} = 2 V to 3.6 V	-	25(3)	ns
	$t_{r(IO)out}$	Output low to high level rise time		-	25(3)	
11	$f_{max(IO)out}$	Maximum frequency(2)	C_L = 30 pF, V_{DD} = 2.7 V to 3.6 V	-	50(3)	MHz
			C_L = 50 pF, V_{DD} = 2.7 V to 3.6 V	-	30(3)	MHz
			C_L = 50 pF, V_{DD} = 2 V to 2.7 V	-	20(3)	MHz
	$t_{f(IO)out}$	Output high to low level fall time	C_L = 30 pF, V_{DD} = 2.7 V to 3.6 V	-	5(3)	ns
			C_L = 50 pF, V_{DD} = 2.7 V to 3.6 V	-	8(3)	
			C_L = 50 pF, V_{DD} = 2 V to 2.7 V	-	12(3)	
	$t_{r(IO)out}$	Output low to high level rise time	C_L = 30 pF, V_{DD} = 2.7 V to 3.6 V	-	5(3)	
			C_L = 50 pF, V_{DD} = 2.7 V to 3.6 V	-	8(3)	
			C_L = 50 pF, V_{DD} = 2 V to 2.7 V	-	12(3)	
FM+ configuration(4)	$f_{max(IO)out}$	Maximum frequency(2)	C_L = 50 pF, V_{DD} = 2 V to 3.6 V	-	2(4)	MHz
	$t_{f(IO)out}$	Output high to low level fall time		-	12(4)	ns
	$t_{r(IO)out}$	Output low to high level rise time		-	34(4)	
-	t_{EXTIpw}	Pulse width of external signals detected by the EXTI controller	-	10(3)	-	ns

1. The I/O speed is configured using the OSPEEDRx[1:0] bits. Refer to the RM0316 reference manual for a description of GPIO Port configuration register.
2. The maximum frequency is defined in *Figure 23*.
3. Guaranteed by design.
4. The I/O speed configuration is bypassed in FM+ I/O mode. Refer to the STM32F303x STM32F313xx reference manual RM0316 for a description of FM+ I/O mode configuration.

Figure 23. I/O AC characteristics definition

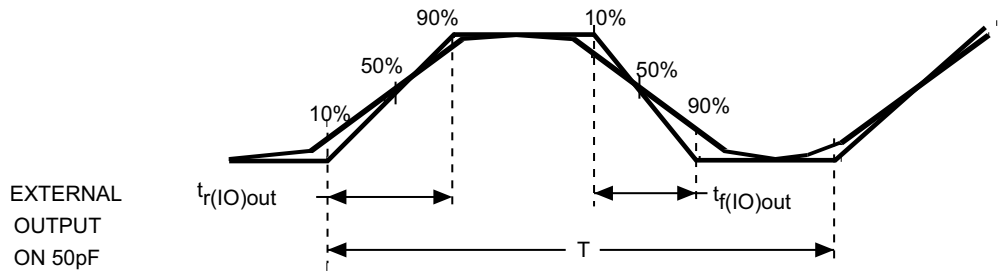

Maximum frequency is achieved if $(t_r + t_f) \leq 2/3)T$ and if the duty cycle is (45-55%) when loaded by 50pF

ai14131c

6.3.15 NRST pin characteristics

The NRST pin input driver uses CMOS technology. It is connected to a permanent pull-up resistor, R_{PU} (see *Table 54*).

Unless otherwise specified, the parameters given in *Table 57* are derived from tests performed under ambient temperature and V_{DD} supply voltage conditions summarized in *Table 24*.

Table 57. NRST pin characteristics

Symbol	Parameter	Conditions	Min	Typ	Max	Unit
$V_{IL(NRST)}$(1)	NRST Input low level voltage	-	-	-	$0.3V_{DD}$+ 0.07(1)	V
$V_{IH(NRST)}$(1)	NRST Input high level voltage	-	$0.445V_{DD}$+ 0.398(1)	-	-	
$V_{hys(NRST)}$	NRST Schmitt trigger voltage hysteresis	-	-	200	-	mV
R_{PU}	Weak pull-up equivalent resistor(2)	$V_{IN} = V_{SS}$	25	40	55	kΩ
$V_{F(NRST)}$(1)	NRST Input filtered pulse	-	-	-	100(1)	ns
$V_{NF(NRST)}$(1)	NRST Input not filtered pulse	-	500(1)	-	-	ns

1. Guaranteed by design.
2. The pull-up is designed with a true resistance in series with a switchable PMOS. This PMOS contribution to the series resistance must be minimum (~10% order).

Figure 24. Recommended NRST pin protection

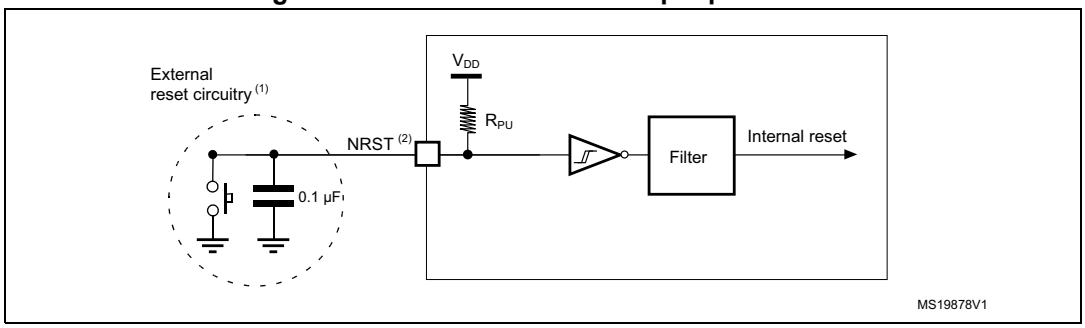

1. The reset network protects the device against parasitic resets.
2. The user must ensure that the level on the NRST pin can go below the $V_{IL(NRST)}$ max level specified in *Table 57*. Otherwise the reset will not be taken into account by the device.

6.3.16 Timer characteristics

The parameters given in *Table 58* are guaranteed by design.

Refer to *Section 6.3.14: I/O port characteristics* for details on the input/output alternate function characteristics (output compare, input capture, external clock, PWM output).

Table 58. TIMx(1)(2) characteristics

Symbol	Parameter	Conditions	Min	Max	Unit
$t_{res(TIM)}$	Timer resolution time	-	1	-	$t_{TIMxCLK}$
		$f_{TIMxCLK}$ = 72 MHz	13.9	-	ns
		$f_{TIMxCLK}$ = 144 MHz x=1.8	6.95	-	ns
f_{EXT}	Timer external clock frequency on CH1 to CH4	-	0	$f_{TIMxCLK}/2$	MHz
		$f_{TIMxCLK}$ = 72 MHz	0	36	MHz
Res_{TIM}	Timer resolution	TIMx (except TIM2)	-	16	bit
		TIM2	-	32	
$t_{COUNTER}$	16-bit counter clock period	-	1	65536	$t_{TIMxCLK}$
		$f_{TIMxCLK}$ = 72 MHz	0.0139	910	µs
		$f_{TIMxCLK}$ = 144 MHz x=1.8	0.0069	455	µs
t_{MAX_COUNT}	Maximum possible count with 32-bit counter	-	-	65536 × 65536	$t_{TIMxCLK}$
		$f_{TIMxCLK}$ = 72 MHz	-	59.65	s
		$f_{TIMxCLK}$ = 144 MHz x=1.8	-	29.825	s

1. TIMx is used as a general term to refer to the TIM1, TIM2, TIM3, TIM4, TIM8, TIM15, TIM16 and TIM17 timers.
2. Guaranteed by design.

Table 59. IWDG min/max timeout period at 40 kHz (LSI) (1)

Prescaler divider	PR[2:0] bits	Min timeout (ms) RL[11:0]= 0x000	Max timeout (ms) RL[11:0]= 0xFFF
/4	0	0.1	409.6
/8	1	0.2	819.2
/16	2	0.4	1638.4
/32	3	0.8	3276.8
/64	4	1.6	6553.6
/128	5	3.2	13107.2
/256	7	6.4	26214.4

1. These timings are given for a 40 kHz clock but the microcontroller's internal RC frequency can vary from 30 to 60 kHz. Moreover, given an exact RC oscillator frequency, the exact timings still depend on the phasing of the APB interface clock versus the LSI clock so that there is always a full RC period of uncertainty.

Table 60. WWDG min-max timeout value @72 MHz (PCLK)(1)

Prescaler	WDGTB	Min timeout value	Max timeout value
1	0	0.05687	3.6409
2	1	0.1137	7.2817
4	2	0.2275	14.564
8	3	0.4551	29.127

1. Guaranteed by design.

6.3.17 Communications interfaces

I²C interface characteristics

The I²C interface meets the timings requirements of the I²C-bus specification and user manual rev.03 for:

- Standard-mode (Sm) : with a bit rate up to 100 Kbits/s
- Fast-mode (Fm) : with a bit rate up to 400 Kbits/s
- Fast-mode Plus (Fm+) : with a bit rate up to 1Mbits/s

The I²C timings requirements are guaranteed by design when the I²C peripheral is properly configured (refer to Reference manual).

The SDA and SCL I/O requirements are met with the following restrictions: the SDA and SCL I/O pins are “true” open-drain. When configured as open-drain, the PMOS connected between the I/O pin and VDDIOx is disabled, but is still present. Only FTf I/O pins support Fm+ low level output current maximum requirement. Refer to *Section 6.3.14: I/O port characteristics*.

All I²C I/Os embed an analog filter. refer to the *Table 62: I2C analog filter characteristics*.

Table 61. I2C timings specification (see I2C specification, rev.03, June 2007)(1)

Symbol	Parameter	Standard mode		Fast mode		Fast Mode Plus		Unit
		Min	Max	Min	Max	Min	Max	
f_{SCL}	SCL clock frequency	0	100	0	400	0	1000	KHz
t_{LOW}	Low period of the SCL clock	4.7	-	1.3	-	0.5	-	µs
t_{HIGH}	High Period of the SCL clock	4		0.6		0.26	-	µs
t_r	Rise time of both SDA and SCL signals	-	1000	-	300	-	120	ns
t_f	Fall time of both SDA and SCL signals	-	300	-	300	-	120	ns
$t_{HD;DAT}$	Data hold time	0	-	0	-	0	-	µs
$t_{VD;DAT}$	Data valid time	-	3.45(2)	-	0.9(2)	-	0.45(2)	µs
$t_{VD;ACK}$	Data valid acknowledge time	-	3.45(2)	-	0.9(2)	-	0.45(2)	µs
$t_{SU;DAT}$	Data setup time	250	-	100	-	50	-	ns
$t_{HD:STA}$	Hold time (repeated) START condition	4.0	-	0.6	-	0.26	-	µs
$t_{SU:STA}$	Set-up time for a repeated START condition	4.7	-	0.6	-	0.26		µs
$t_{SU:STO}$	Set-up time for STOP condition	4.0	-	0.6	-	0.26	-	µs
t_{BUF}	Bus free time between a STOP and START condition	4.7	-	1.3	-	0.5	-	µs
C_b	Capacitive load for each bus line	-	400	-	400	-	550	pF
t_{SP}	Pulse width of spikes that are suppressed by the analog filter for Standard and Fast mode	0	50(3)	0	50(3)	-	-	ns

1. The I2C characteristics are the requirements from I2C bus specification rev03. They are guaranteed by design when I2Cx_TIMING register is correctly programmed (Refer to the RM0316 reference manual).
2. The maximum tHD;DAT could be 3.45 µs, 0.9 µs and 0.45 µs for standard mode, fast mode and fast mode plus, but must be less than the maximum of tVD;DAT or tVD;ACK by a transition time.
3. The minimum width of the spikes filtered by the analog filter is above t_{SP}(max).

Table 62. I2C analog filter characteristics(1)

Symbol	Parameter	Min	Max	Unit
t_{AF}	Pulse width of spikes that are suppressed by the analog filter	50	260	ns

1. Guaranteed by design.

Figure 25. I²C bus AC waveforms and measurement circuit

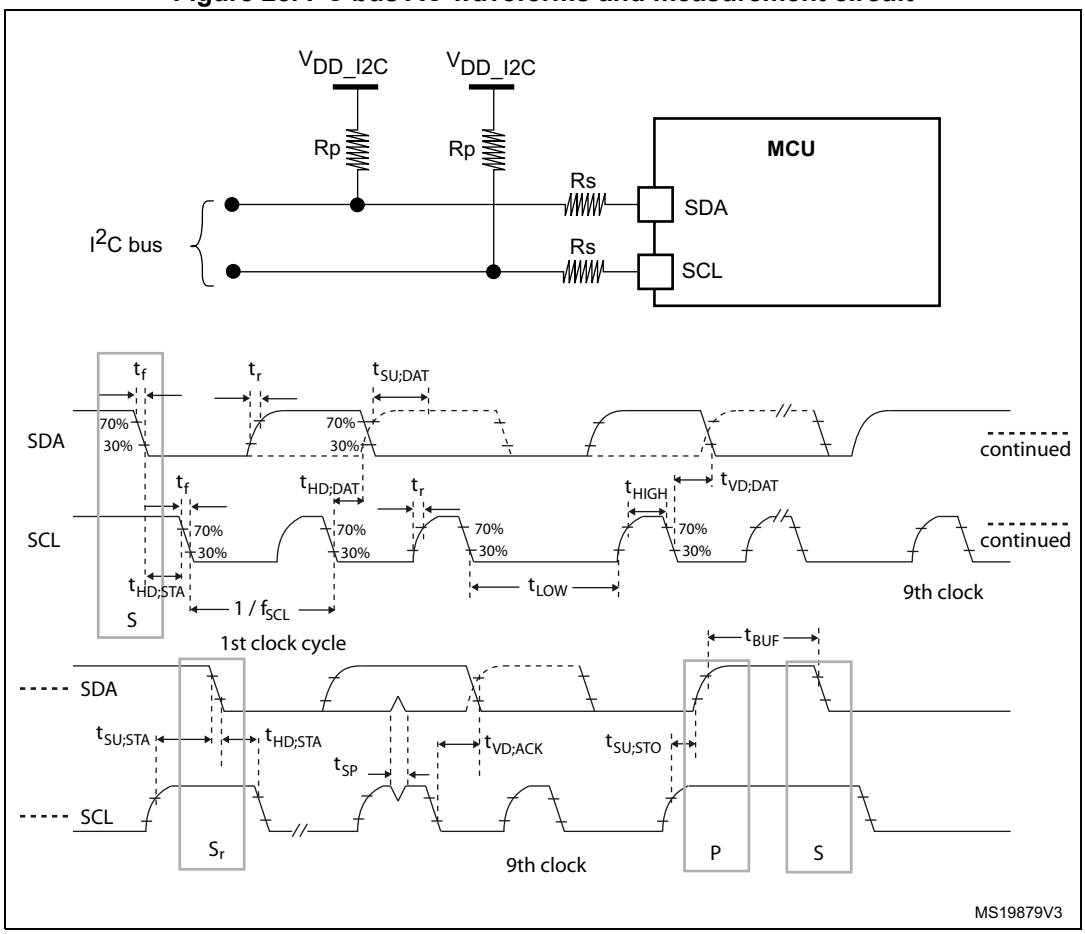

1. Rs: Series protection resistors, Rp: Pull-up resistors, VDD_I2C: I2C bus supply.

SPI/I^{2}S characteristics

Unless otherwise specified, the parameters given in *Table 63* for SPI or in *Table 64* for I^{2}S are derived from tests performed under ambient temperature, f_{PCLKx} frequency and V_{DD} supply voltage conditions summarized in *Table 24*.

Refer to *Section 6.3.14: I/O port characteristics* for more details on the input/output alternate function characteristics (NSS, SCK, MOSI, MISO for SPI and WS, CK, SD for I^{2}S).

Table 63. SPI characteristics(1)

Symbol	Parameter	Conditions	Min	Typ	Max	Unit
f_{SCK} $1/t_{c(SCK)}$	SPI clock frequency	Master mode, SPI1 $2.7<V_{DD}<3.6$	-	-	24	MHz
		Slave mode, SPI1 $2.7<V_{DD}<3.6$			24	
		Master mode, SPI1/2/3 $2<V_{DD}<3.6$			18	
		Slave mode, SPI1/2/3 $2<V_{DD}<3.6$			18	
DuCy(SCK)	Duty cycle of SPI clock frequency	Slave mode	30	50	70	%
$t_{su(NSS)}$	NSS setup time	Slave mode, SPI presc = 2	4*Tpclk	-	-	ns
$t_{h(NSS)}$	NSS hold time	Slave mode, SPI presc = 2	2*Tpclk	-	-	
$t_{w(SCKH)}$ $t_{w(SCKL)}$	SCK high and low time	Master mode	Tpclk-2	Tpclk	Tpclk+2	
$t_{su(MI)}$	Data input setup time	Master mode	5.5	-	-	
$t_{su(SI)}$		Slave mode	6.5	-	-	
$t_{h(MI)}$	Data input hold time	Master mode	5	-	-	
$t_{h(SI)}$		Slave mode	5	-	-	
$t_{a(SO)}$	Data output access time	Slave mode	0	-	4*Tpclk	
$t_{dis(SO)}$	Data output disable time	Slave mode	0	-	24	
$t_{v(SO)}$	Data output valid time	Slave mode	-	12	27	
		Slave mode, SPI1 $2.7<V_{DD}<3.6V$	-	12	18	
$t_{v(MO)}$		Master mode	-	1.5	3	
$t_{h(SO)}$	Data output hold time	Slave mode	11	-	-	
$t_{h(MO)}$		Master mode	0	-	-	

1. Guaranteed by characterization results.

Figure 26. SPI timing diagram - slave mode and CPHA = 0

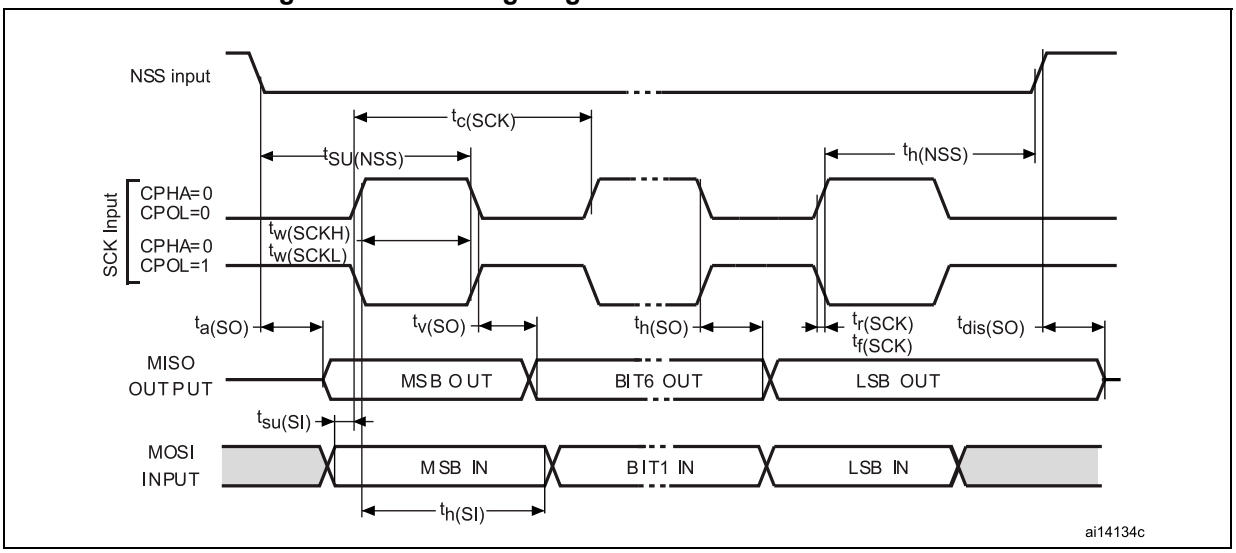

Figure 27. SPI timing diagram - slave mode and CPHA = 1(1)

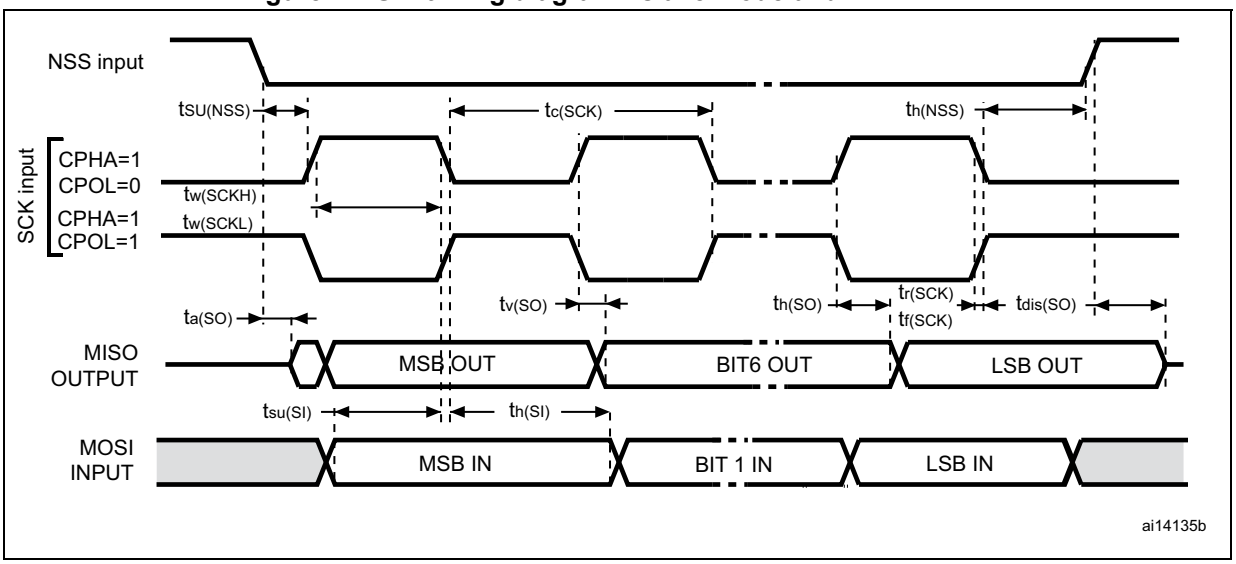

1. Measurement points are done at $0.5V_{DD}$ and with external C_L = 30 pF.

Figure 28. SPI timing diagram - master mode(1)

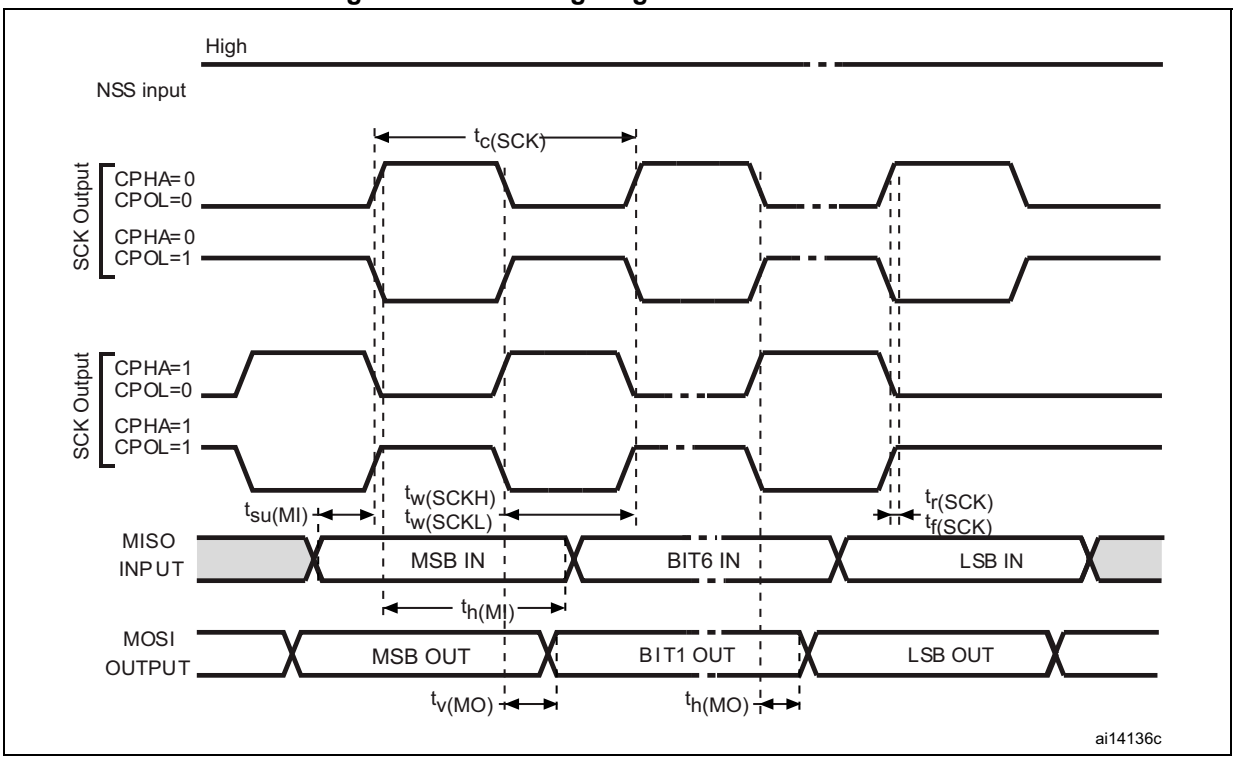

1. Measurement points are done at $0.5V_{DD}$ and with external C_L = 30 pF.

Table 64. I^2S characteristics(1)

Symbol	Parameter	Conditions	Min	Max	Unit
f_{CK} $1/t_{c(CK)}$	I^2S clock frequency	Master data: 16 bits, audio freq=48 kHz	1.496	1.503	MHz
		Slave	0	12.288	
$t_{r(CK)}$ $t_{f(CK)}$	I^2S clock rise and fall time	Capacitive load C_L = 30 pF	-	8	ns
$t_{w(CKH)}$	I^2S clock high time	Master f_{PCLK}= 36 MHz, audio frequency = 48 kHz	331	-	
$t_{w(CKL)}$	I^2S clock low time		332	-	
$t_{v(WS)}$	WS valid time	Master mode	4	-	
$t_{h(WS)}$	WS hold time	Master mode	4	-	
$t_{su(WS)}$	WS setup time	Slave mode	4	-	
$t_{h(WS)}$	WS hold time	Slave mode	0	-	
Duty Cycle	I^2S slave input clock duty cycle	Slave mode	30	70	%
$t_{su(SD_MR)}$	Data input setup time	Master receiver	9	-	ns
$t_{su(SD_SR)}$	Data input setup time	Slave receiver	2	-	
$t_{h(SD_MR)}$	Data input hold time	Master receiver	0	-	
$t_{h(SD_SR)}$		Slave receiver	0	-	
$t_{v(SD_ST)}$	Data output valid time	Slave transmitter (after enable edge)	-	29	
$t_{h(SD_ST)}$	Data output hold time	Slave transmitter (after enable edge)	12	-	
$t_{v(SD_MT)}$	Data output valid time	Master transmitter (after enable edge)	-	3	
$t_{h(SD_MT)}$	Data output hold time	Master transmitter (after enable edge)	2	-	

1. Guaranteed by characterization results.

Figure 29. I²S slave timing diagram (Philips protocol)(1)

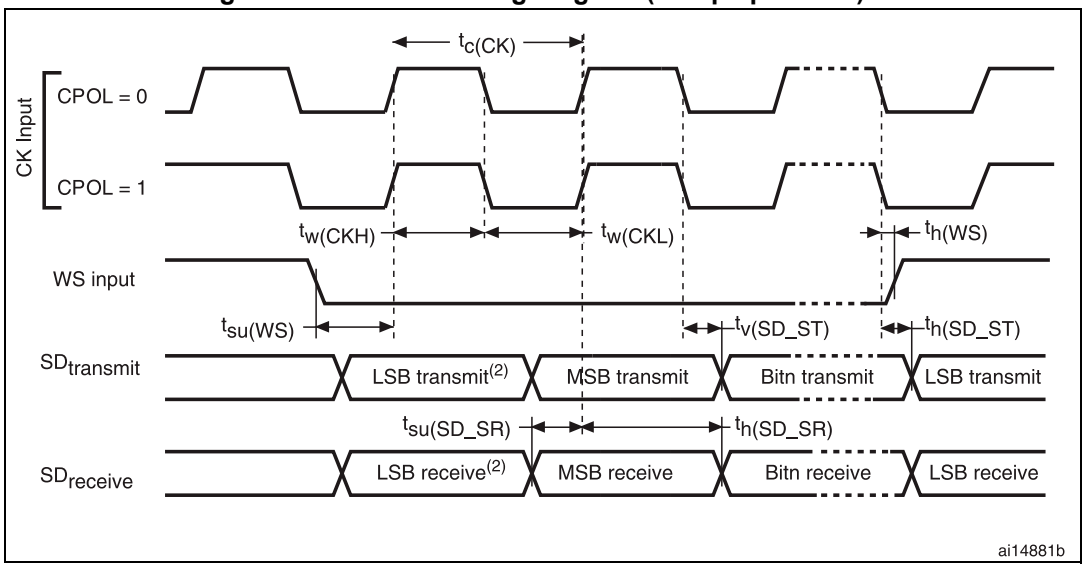

1. Measurement points are done at $0.5V_{DD}$ and with external C_L=30 pF.
2. LSB transmit/receive of the previously transmitted byte. No LSB transmit/receive is sent before the first byte.

Figure 30. I²S master timing diagram (Philips protocol)(1)

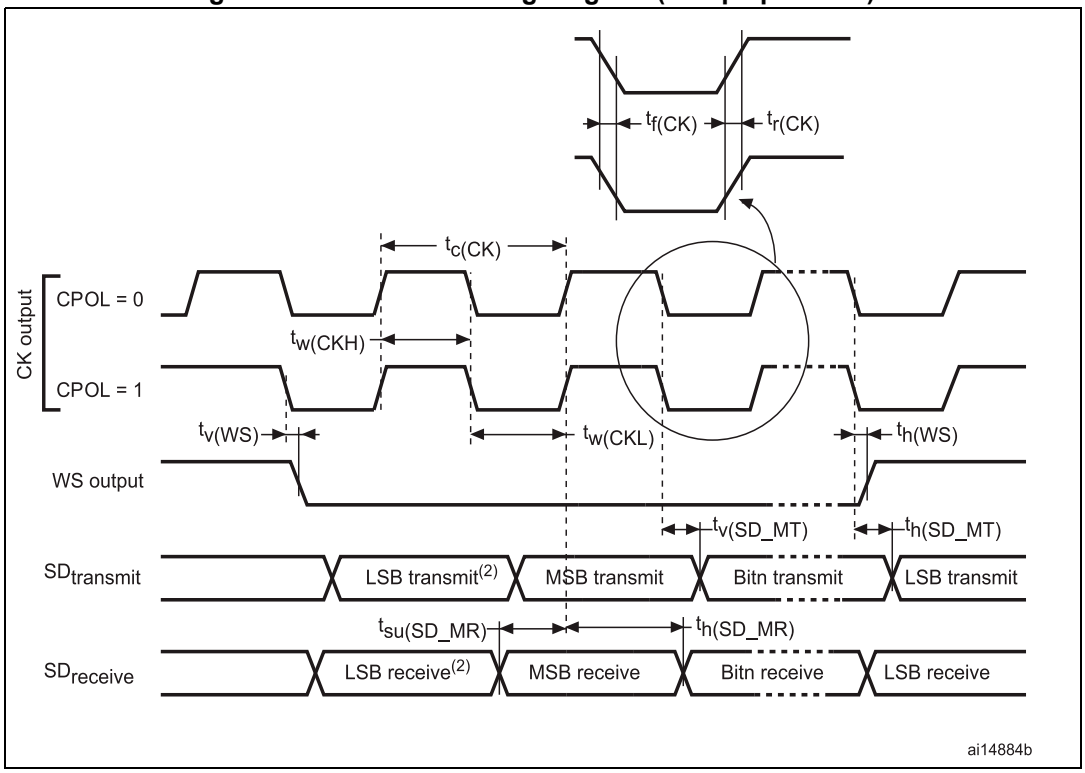

1. Measurement points are done at $0.5V_{DD}$ and with external C_L=30 pF.
2. LSB transmit/receive of the previously transmitted byte. No LSB transmit/receive is sent before the first byte.

USB characteristics

Table 65. USB startup time

Symbol	Parameter	Max	Unit
$t_{STARTUP}$(1)	USB transceiver startup time	1	µs

1. Guaranteed by design.

Table 66. USB DC electrical characteristics

Symbol	Parameter	Conditions	Min.(1)	Max.(1)	Unit
Input levels					
V_{DD}	USB operating voltage(2)	-	3.0(3)	3.6	V
V_{DI}(4)	Differential input sensitivity	I(USB_DP, USB_DM)	0.2	-	V
V_{CM}(4)	Differential common mode range	Includes V_{DI} range	0.8	2.5	
V_{SE}(4)	Single ended receiver threshold	-	1.3	2.0	
Output levels					
V_{OL}	Static output level low	R_L of 1.5 kΩ to 3.6 V(5)	-	0.3	V
V_{OH}	Static output level high	R_L of 15 kΩ to V_{SS}(5)	2.8	3.6	

1. All the voltages are measured from the local ground potential.
2. To be compliant with the USB 2.0 full-speed electrical specification, the USB_DP (D+) pin should be pulled up with a 1.5 kΩ resistor to a 3.0-to-3.6 V voltage range.
3. The STM32F303xB/STM32F303xC USB functionality is ensured down to 2.7 V but not the full USB electrical characteristics which are degraded in the 2.7-to-3.0 V V_{DD} voltage range.
4. Guaranteed by design.
5. R_L is the load connected on the USB drivers.

Figure 31. USB timings: definition of data signal rise and fall time

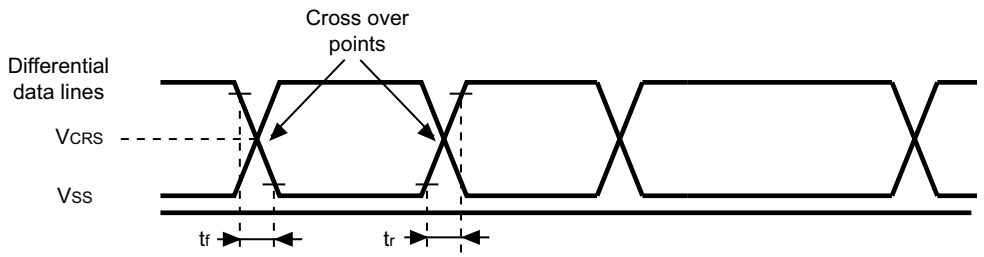

Table 67. USB: Full-speed electrical characteristics(1)

Symbol	Parameter	Conditions	Min	Typ	Max	Unit
Driver characteristics						
t_r	Rise time(2)	C_L = 50 pF	4	-	20	ns
t_f	Fall time(2)	C_L = 50 pF	4	-	20	ns
t_{rfm}	Rise/ fall time matching	t_r/t_f	90	-	110	%
V_{CRS}	Output signal crossover voltage	-	1.3	-	2.0	V
Output driver Impedance(3)	Z_{DRV}	driving high and low	28	40	44	Ω

1. Guaranteed by design.
2. Measured from 10% to 90% of the data signal. For more detailed informations, please refer to USB Specification - Chapter 7 (version 2.0).
3. No external termination series resistors are required on USB_DP (D+) and USB_DM (D-), the matching impedance is already included in the embedded driver.

CAN (controller area network) interface

Refer to *Section 6.3.14: I/O port characteristics* for more details on the input/output alternate function characteristics (CAN_TX and CAN_RX).

6.3.18 ADC characteristics

Unless otherwise specified, the parameters given in *Table 68* to *Table 70* are guaranteed by design, with conditions summarized in *Table 24*.

Table 68. ADC characteristics

Symbol	Parameter	Conditions	Min	Typ	Max	Unit
V_{DDA}	Analog supply voltage for ADC	-	2	-	3.6	V
I_{DDA}	ADC current consumption on VDDA pin (see *Figure 32*)	Single-ended mode, 5 MSPS	-	907	1033.0	µA
		Single-ended mode, 1 MSPS	-	194	285.5	
		Single-ended mode, 200 KSPS	-	51.5	70	
		Differential mode, 5 MSPS	-	887.5	1009	
		Differential mode, 1 MSPS	-	212	285	
		Differential mode, 200 KSPS	-	51	69.5	
V_{REF+}	Positive reference voltage	-	2	-	V_{DDA}	V
V_{REF-}	Negative reference voltage	-	-	0	-	
I_{REF}	ADC current consumption on VREF+ pin (see *Figure 33*)	Single-ended mode, 5 MSPS	-	104	139	µA
		Single-ended mode, 1 MSPS	-	20.4	37	
		Single-ended mode, 200 KSPS	-	3.3	11.3	
		Differential mode, 5 MSPS	-	174	235	
		Differential mode, 1 MSPS	-	34.6	52.6	
		Differential mode, 200 KSPS	-	6	13.6	

Table 68. ADC characteristics (continued)

Symbol	Parameter	Conditions	Min	Typ	Max	Unit
f_{ADC}	ADC clock frequency	-	0.14	-	72	MHz
f_S(1)	Sampling rate	Resolution = 12 bits, Fast Channel	0.01	-	5.14	MSPS
		Resolution = 10 bits, Fast Channel	0.012	-	6	
		Resolution = 8 bits, Fast Channel	0.014	-	7.2	
		Resolution = 6 bits, Fast Channel	0.0175	-	9	
f_{TRIG}(1)	External trigger frequency	f_{ADC} = 72 MHz Resolution = 12 bits	-	-	5.14	MHz
		Resolution = 12 bits	-	-	14	$1/f_{ADC}$
V_{AIN}	Conversion voltage range(2)	-	0	-	V_{REF+}	V
R_{AIN}(1)	External input impedance	-	-	-	100	kΩ
C_{ADC}(1)	Internal sample and hold capacitor	-	-	5	-	pF
t_{STAB}(1)	Power-up time	-	1			conversion cycle
t_{CAL}(1)	Calibration time	f_{ADC} = 72 MHz	1.56			µs
		-	112			$1/f_{ADC}$
t_{latr}(1)	Trigger conversion latency Regular and injected channels without conversion abort	CKMODE = 00	1.5	2	2.5	$1/f_{ADC}$
		CKMODE = 01	-	-	2	$1/f_{ADC}$
		CKMODE = 10	-	-	2.25	$1/f_{ADC}$
		CKMODE = 11	-	-	2.125	$1/f_{ADC}$
$t_{latrinj}$(1)	Trigger conversion latency Injected channels aborting a regular conversion	CKMODE = 00	2.5	3	3.5	$1/f_{ADC}$
		CKMODE = 01	-	-	3	$1/f_{ADC}$
		CKMODE = 10	-	-	3.25	$1/f_{ADC}$
		CKMODE = 11	-	-	3.125	$1/f_{ADC}$

Table 68. ADC characteristics (continued)

Symbol	Parameter	Conditions	Min	Typ	Max	Unit
t_S(1)	Sampling time	f_{ADC} = 72 MHz	0.021	-	8.35	µs
		-	1.5	-	601.5	$1/f_{ADC}$
$T_{ADCVREG_STUP}$(1)	ADC Voltage Regulator Start-up time	-	-	-	10	µs
t_{CONV}(1)	Total conversion time (including sampling time)	f_{ADC} = 72 MHz Resolution = 12 bits	0.19	-	8.52	µs
		Resolution = 12 bits	14 to 614 (t_S for sampling + 12.5 for successive approximation)			$1/f_{ADC}$
CMIR(1)	Common Mode Input signal Range	ADC differential mode	$(V_{SSA}+V_{REF+})/2$ -10%	$(V_{SSA}+V_{REF+})/2$	$(V_{SSA}+V_{REF+})/2$ + 10%	V

1. Data guaranteed by design.
2. V_{REF+} can be internally connected to V_{DDA} and V_{REF-} can be internally connected to V_{SSA}, depending on the package. Refer to *Section 4: Pinouts and pin description* for further details.

Figure 32. ADC typical current consumption on VDDA pin

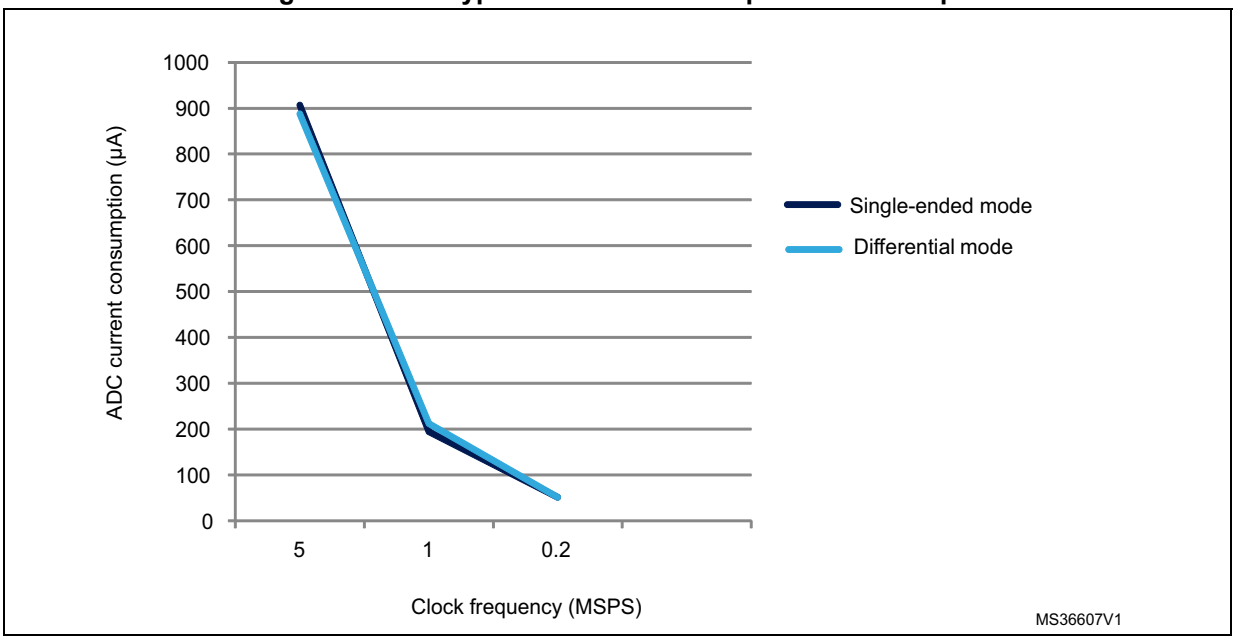

Figure 33. ADC typical current consumption on VREF+ pin

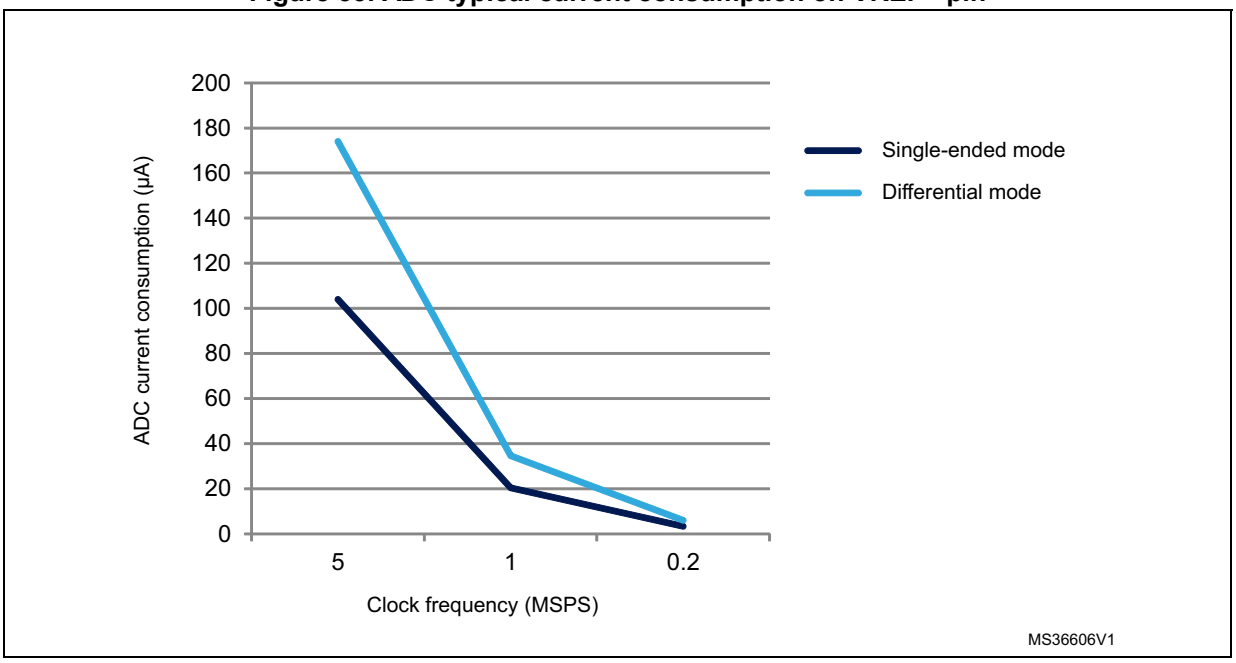

Table 69. Maximum ADC R_{AIN} (1)

Resolution	Sampling cycle @ 72 MHz	Sampling time [ns] @ 72 MHz	R_{AIN} max (kΩ)		
			Fast channels(2)	Slow channels	Other channels(3)
12 bits	1.5	20.83	0.018	NA	NA
	2.5	34.72	0.150	NA	0.022
	4.5	62.50	0.470	0.220	0.180
	7.5	104.17	0.820	0.560	0.470
	19.5	270.83	2.70	1.80	1.50
	61.5	854.17	8.20	6.80	4.70
	181.5	2520.83	22.0	18.0	15.0
	601.5	8354.17	82.0	68.0	47.0
10 bits	1.5	20.83	0.082	NA	NA
	2.5	34.72	0.270	0.082	0.100
	4.5	62.50	0.560	0.390	0.330
	7.5	104.17	1.20	0.82	0.68
	19.5	270.83	3.30	2.70	2.20
	61.5	854.17	10.0	8.2	6.8
	181.5	2520.83	33.0	27.0	22.0
	601.5	8354.17	100.0	82.0	68.0
8 bits	1.5	20.83	0.150	NA	0.039
	2.5	34.72	0.390	0.180	0.180
	4.5	62.50	0.820	0.560	0.470
	7.5	104.17	1.50	1.20	1.00
	19.5	270.83	3.90	3.30	2.70
	61.5	854.17	12.00	12.00	8.20
	181.5	2520.83	39.00	33.00	27.00
	601.5	8354.17	100.00	100.00	82.00
6 bits	1.5	20.83	0.270	0.100	0.150
	2.5	34.72	0.560	0.390	0.330
	4.5	62.50	1.200	0.820	0.820
	7.5	104.17	2.20	1.80	1.50
	19.5	270.83	5.60	4.70	3.90
	61.5	854.17	18.0	15.0	12.0
	181.5	2520.83	56.0	47.0	39.0
	601.5	8354.17	100.00	100.0	100.0

1. Guaranteed by characterization results.
2. All fast channels, expect channels on PA2, PA6, PB1, PB12.

3. Channels available on PA2, PA6, PB1, PB12.

Table 70. ADC accuracy - limited test conditions, 100-pin packages (1)(2)

Symbol	Parameter	Conditions			Min (3)	Typ	Max (3)	Unit
ET	Total unadjusted error	ADC clock freq. ≤72 MHz Sampling freq. ≤5 Msps $V_{DDA} = V_{REF+} = 3.3$ V 25°C 100-pin package	Single ended	Fast channel 5.1 Ms	-	±3.5	±4.5	LSB
				Slow channel 4.8 Ms	-	±4	±4.5	
			Differential	Fast channel 5.1 Ms	-	±3	±3	
				Slow channel 4.8 Ms	-	±3	±3	
EO	Offset error		Single ended	Fast channel 5.1 Ms	-	±1	±1.5	
				Slow channel 4.8 Ms	-	±1	±2.5	
			Differential	Fast channel 5.1 Ms	-	±1	±1.5	
				Slow channel 4.8 Ms	-	±1	±1.5	
EG	Gain error		Single ended	Fast channel 5.1 Ms	-	±3	±4	
				Slow channel 4.8 Ms	-	±3.5	±4	
			Differential	Fast channel 5.1 Ms	-	±1.5	±2.5	
				Slow channel 4.8 Ms	-	±2	±2.5	
ED	Differential linearity error		Single ended	Fast channel 5.1 Ms	-	±1	±1.5	
				Slow channel 4.8 Ms	-	±1	±1.5	
			Differential	Fast channel 5.1 Ms	-	±1	±1	
				Slow channel 4.8 Ms	-	±1	±1	
EL	Integral linearity error		Single ended	Fast channel 5.1 Ms	-	±1.5	±2	
				Slow channel 4.8 Ms	-	±1.5	±3	
			Differential	Fast channel 5.1 Ms	-	±1	±1.5	
				Slow channel 4.8 Ms	-	±1	±1.5	
ENOB(4)	Effective number of bits		Single ended	Fast channel 5.1 Ms	10.7	10.8	-	bits
				Slow channel 4.8 Ms	10.7	10.8	-	
			Differential	Fast channel 5.1 Ms	11.2	11.3	-	
				Slow channel 4.8 Ms	11.1	11.3	-	
SINAD(4)	Signal-to-noise and distortion ratio		Single ended	Fast channel 5.1 Ms	66	67	-	dB
				Slow channel 4.8 Ms	66	67	-	
			Differential	Fast channel 5.1 Ms	69	70	-	
				Slow channel 4.8 Ms	69	70	-	

Table 70. ADC accuracy - limited test conditions, 100-pin packages (1)(2) (continued)

Symbol	Parameter	Conditions			Min (3)	Typ	Max (3)	Unit
SNR(4)	Signal-to-noise ratio	ADC clock freq. ≤ 72 MHz Sampling freq ≤ 5 Msps $V_{DDA} = V_{REF+} = 3.3$ V 25°C 100-pin package	Single ended	Fast channel 5.1 Ms	66	67	-	dB
				Slow channel 4.8 Ms	66	67	-	
			Differential	Fast channel 5.1 Ms	69	70	-	
				Slow channel 4.8 Ms	69	70	-	
THD(4)	Total harmonic distortion		Single ended	Fast channel 5.1 Ms	-	-76	-76	
				Slow channel 4.8 Ms	-	-76	-76	
			Differential	Fast channel 5.1 Ms	-	-80	-80	
				Slow channel 4.8 Ms	-	-80	-80	

1. ADC DC accuracy values are measured after internal calibration.
2. ADC accuracy vs. negative Injection Current: Injecting negative current on any analog input pins should be avoided as this significantly reduces the accuracy of the conversion being performed on another analog input. It is recommended to add a Schottky diode (pin to ground) to analog pins which may potentially inject negative current.
Any positive injection current within the limits specified for $I_{INJ(PIN)}$ and $\Sigma I_{INJ(PIN)}$ in *Section 6.3.14* does not affect the ADC accuracy.
3. Guaranteed by characterization results.
4. Value measured with a -0.5 dB full scale 50 kHz sine wave input signal.

Table 71. ADC accuracy, 100-pin packages(1)(2)(3)

Symbol	Parameter	Conditions			Min (4)	Max(4)	Unit
ET	Total unadjusted error	ADC clock freq. ≤ 72 MHz, Sampling freq. ≤ 5 Msps 2 V ≤ V_{DDA} , V_{REF+} ≤ 3.6 V 100-pin package	Single Ended	Fast channel 5.1 Ms	-	±6.5	LSB
				Slow channel 4.8 Ms	-	±6.5	
			Differential	Fast channel 5.1 Ms	-	±4	
				Slow channel 4.8 Ms	-	±4	
EO	Offset error		Single Ended	Fast channel 5.1 Ms	-	±3	
				Slow channel 4.8 Ms	-	±3	
			Differential	Fast channel 5.1 Ms	-	±2	
				Slow channel 4.8 Ms	-	±2	
EG	Gain error		Single Ended	Fast channel 5.1 Ms	-	±6	
				Slow channel 4.8 Ms	-	±6	
			Differential	Fast channel 5.1 Ms	-	±3	
				Slow channel 4.8 Ms	-	±3	
ED	Differential linearity error		Single Ended	Fast channel 5.1 Ms	-	±1.5	
				Slow channel 4.8 Ms	-	±1.5	
			Differential	Fast channel 5.1 Ms	-	±1.5	
				Slow channel 4.8 Ms	-	±1.5	
EL	Integral linearity error		Single Ended	Fast channel 5.1 Ms	-	±2	
				Slow channel 4.8 Ms	-	±3	
			Differential	Fast channel 5.1 Ms	-	±2	
				Slow channel 4.8 Ms	-	±2	
ENOB (5)	Effective number of bits		Single Ended	Fast channel 5.1 Ms	10.4	-	bits
				Slow channel 4.8 Ms	10.2	-	
			Differential	Fast channel 5.1 Ms	10.8	-	
				Slow channel 4.8 Ms	10.8	-	

Table 71. ADC accuracy, 100-pin packages(1)(2)(3) (continued)

Symbol	Parameter	Conditions			Min (4)	Max(4)	Unit
SINAD (5)	Signal-to-noise and distortion ratio	ADC clock freq. ≤ 72 MHz, Sampling freq. ≤ 5 Msps, 2 V ≤ V_{DDA}, V_{REF+} ≤ 3.6 V 100-pin package	Single Ended	Fast channel 5.1 Ms	64	-	dB
				Slow channel 4.8 Ms	63	-	
			Differential	Fast channel 5.1 Ms	67	-	
				Slow channel 4.8 Ms	67	-	
SNR(5)	Signal-to-noise ratio		Single Ended	Fast channel 5.1 Ms	64	-	
				Slow channel 4.8 Ms	64	-	
			Differential	Fast channel 5.1 Ms	67	-	
				Slow channel 4.8 Ms	67	-	
THD(5)	Total harmonic distortion		Single Ended	Fast channel 5.1 Ms	-	-74	
				Slow channel 4.8 Ms	-	-74	
			Differential	Fast channel 5.1 Ms	-	-78	
				Slow channel 4.8 Ms	-	-76	

1. ADC DC accuracy values are measured after internal calibration.
2. ADC accuracy vs. negative Injection Current: Injecting negative current on any analog input pins should be avoided as this significantly reduces the accuracy of the conversion being performed on another analog input. It is recommended to add a Schottky diode (pin to ground) to analog pins which may potentially inject negative current.
Any positive injection current within the limits specified for $I_{INJ(PIN)}$ and $\Sigma I_{INJ(PIN)}$ in *Section 6.3.14* does not affect the ADC accuracy.
3. Better performance may be achieved in restricted V_{DDA}, frequency and temperature ranges.
4. Guaranteed by characterization results.
5. Value measured with a -0.5 dB full scale 50 kHz sine wave input signal.

Table 72. ADC accuracy - limited test conditions, 64-pin packages(1)(2)

Symbol	Parameter	Conditions			Min (3)	Typ	Max (3)	Unit
ET	Total unadjusted error	ADC clock freq. ≤72 MHz Sampling freq. ≤5 Msps V_{DDA} = 3.3 V 25°C 64-pin package	Single ended	Fast channel 5.1 Ms	-	±4	±4.5	LSB
				Slow channel 4.8 Ms	-	±5.5	±6	
			Differential	Fast channel 5.1 Ms	-	±3.5	±4	
				Slow channel 4.8 Ms	-	±3.5	±4	
EO	Offset error		Single ended	Fast channel 5.1 Ms	-	±2	±2	
				Slow channel 4.8 Ms	-	±1.5	±2	
			Differential	Fast channel 5.1 Ms	-	±1.5	±2	
				Slow channel 4.8 Ms	-	±1.5	±2	
EG	Gain error		Single ended	Fast channel 5.1 Ms	-	±3	±4	
				Slow channel 4.8 Ms	-	±5	±5.5	
			Differential	Fast channel 5.1 Ms	-	±3	±3	
				Slow channel 4.8 Ms	-	±3	±3.5	
ED	Differential linearity error		Single ended	Fast channel 5.1 Ms	-	±1	±1	
				Slow channel 4.8 Ms	-	±1	±1	
			Differential	Fast channel 5.1 Ms	-	±1	±1	
				Slow channel 4.8 Ms	-	±1	±1	
EL	Integral linearity error		Single ended	Fast channel 5.1 Ms	-	±1.5	±2	
				Slow channel 4.8 Ms	-	±2	±3	
			Differential	Fast channel 5.1 Ms	-	±1.5	±1.5	
				Slow channel 4.8 Ms	-	±1.5	±2	
ENOB (4)	Effective number of bits		Single ended	Fast channel 5.1 Ms	10.8	10.8	-	bit
				Slow channel 4.8 Ms	10.8	10.8	-	
			Differential	Fast channel 5.1 Ms	11.2	11.3	-	
				Slow channel 4.8 Ms	11.2	11.3	-	
SINAD (4)	Signal-to-noise and distortion ratio		Single ended	Fast channel 5.1 Ms	66	67	-	dB
				Slow channel 4.8 Ms	66	67	-	
			Differential	Fast channel 5.1 Ms	69	70	-	
				Slow channel 4.8 Ms	69	70	-	

Table 72. ADC accuracy - limited test conditions, 64-pin packages(1)(2) (continued)

Symbol	Parameter	Conditions			Min (3)	Typ	Max (3)	Unit
SNR(4)	Signal-to-noise ratio	ADC clock freq. ≤ 72 MHz Sampling freq ≤ 5 Msps V_{DDA} = 3.3 V 25°C 64-pin package	Single ended	Fast channel 5.1 Ms	66	67	-	dB
				Slow channel 4.8 Ms	66	67	-	
			Differential	Fast channel 5.1 Ms	69	70	-	
				Slow channel 4.8 Ms	69	70	-	
THD(4)	Total harmonic distortion		Single ended	Fast channel 5.1 Ms	-	-80	-80	
				Slow channel 4.8 Ms	-	-78	-77	
			Differential	Fast channel 5.1 Ms	-	-83	-82	
				Slow channel 4.8 Ms	-	-81	-80	

1. ADC DC accuracy values are measured after internal calibration.
2. ADC accuracy vs. negative Injection Current: Injecting negative current on any analog input pins should be avoided as this significantly reduces the accuracy of the conversion being performed on another analog input. It is recommended to add a Schottky diode (pin to ground) to analog pins which may potentially inject negative current.
Any positive injection current within the limits specified for $I_{INJ(PIN)}$ and $\Sigma I_{INJ(PIN)}$ in *Section 6.3.14* does not affect the ADC accuracy.
3. Guaranteed by characterization results.
4. Value measured with a -0.5 dB full scale 50 kHz sine wave input signal.

Table 73. ADC accuracy, 64-pin packages(1)(2)(3)

Symbol	Parameter	Conditions			Min(4)	Max (4)	Unit
ET	Total unadjusted error	ADC clock freq. ≤ 72 MHz, Sampling freq. ≤ 5 Msps 2.0 V ≤ V_{DDA} ≤ 3.6 V 64-pin package	Single ended	Fast channel 5.1 Ms	-	±6.5	LSB
				Slow channel 4.8 Ms	-	±6.5	
			Differential	Fast channel 5.1 Ms	-	±4	
				Slow channel 4.8 Ms	-	±4.5	
EO	Offset error		Single ended	Fast channel 5.1 Ms	-	±3	
				Slow channel 4.8 Ms	-	±3	
			Differential	Fast channel 5.1 Ms	-	±2.5	
				Slow channel 4.8 Ms	-	±2.5	
EG	Gain error		Single ended	Fast channel 5.1 Ms	-	±6	
				Slow channel 4.8 Ms	-	±6	
			Differential	Fast channel 5.1 Ms	-	±3.5	
				Slow channel 4.8 Ms	-	±4	
ED	Differential linearity error		Single ended	Fast channel 5.1 Ms	-	±1.5	
				Slow channel 4.8 Ms	-	±1.5	
			Differential	Fast channel 5.1 Ms	-	±1.5	
				Slow channel 4.8 Ms	-	±1.5	
EL	Integral linearity error		Single ended	Fast channel 5.1 Ms	-	±3	
				Slow channel 4.8 Ms	-	±3.5	
			Differential	Fast channel 5.1 Ms	-	±2	
				Slow channel 4.8 Ms	-	±2.5	
ENOB (5)	Effective number of bits		Single ended	Fast channel 5.1 Ms	10.4	-	bits
				Slow channel 4.8 Ms	10.4	-	
			Differential	Fast channel 5.1 Ms	10.8	-	
				Slow channel 4.8 Ms	10.8	-	
SINAD (5)	Signal-to-noise and distortion ratio		Single ended	Fast channel 5.1 Ms	64	-	dB
				Slow channel 4.8 Ms	63	-	
			Differential	Fast channel 5.1 Ms	67	-	
				Slow channel 4.8 Ms	67	-	

Table 73. ADC accuracy, 64-pin packages(1)(2)(3) (continued)

Symbol	Parameter	Conditions			Min(4)	Max (4)	Unit
SNR(5)	Signal-to-noise ratio	ADC clock freq. ≤ 72 MHz, Sampling freq ≤ 5 Msps, 2 V ≤ V_{DDA} ≤ 3.6 V 64-pin package	Single ended	Fast channel 5.1 Ms	64	-	dB
				Slow channel 4.8 Ms	64	-	
			Differential	Fast channel 5.1 Ms	67	-	
				Slow channel 4.8 Ms	67	-	
THD(5)	Total harmonic distortion		Single ended	Fast channel 5.1 Ms	-	-75	
				Slow channel 4.8 Ms	-	-75	
			Differential	Fast channel 5.1 Ms	-	-79	
				Slow channel 4.8 Ms	-	-78	

1. ADC DC accuracy values are measured after internal calibration.
2. ADC accuracy vs. negative Injection Current: Injecting negative current on any analog input pins should be avoided as this significantly reduces the accuracy of the conversion being performed on another analog input. It is recommended to add a Schottky diode (pin to ground) to analog pins which may potentially inject negative current.
Any positive injection current within the limits specified for $I_{INJ(PIN)}$ and $\Sigma I_{INJ(PIN)}$ in *Section 6.3.14* does not affect the ADC accuracy.
3. Better performance may be achieved in restricted V_{DDA}, frequency and temperature ranges.
4. Guaranteed by characterization results.
5. Value measured with a -0.5 dB full scale 50 kHz sine wave input signal.

Table 74. ADC accuracy at 1MSPS(1)(2)

Symbol	Parameter	Test conditions		Typ	Max(3)	Unit
ET	Total unadjusted error	ADC Freq ≤ 72 MHz Sampling Freq ≤ 1MSPS 2.4 V ≤ V_{DDA} = V_{REF+} ≤ 3.6 V Single-ended mode	Fast channel	±2.5	±5	LSB
			Slow channel	±3.5	±5	
EO	Offset error		Fast channel	±1	±2.5	
			Slow channel	±1.5	±2.5	
EG	Gain error		Fast channel	±2	±3	
			Slow channel	±3	±4	
ED	Differential linearity error		Fast channel	±0.7	±2	
			Slow channel	±0.7	±2	
EL	Integral linearity error		Fast channel	±1	±3	
			Slow channel	±1.2	±3	

1. ADC DC accuracy values are measured after internal calibration.
2. ADC accuracy vs. negative Injection Current: Injecting negative current on any analog input pins should be avoided as this significantly reduces the accuracy of the conversion being performed on another analog input. It is recommended to add a Schottky diode (pin to ground) to analog pins which may potentially inject negative current.. Any positive injection current within the limits specified for IINJ(PIN) and ∑IINJ(PIN) in *Section 6.3.14: I/O port characteristics* does not affect the ADC accuracy.
3. Guaranteed by characterization results.

Figure 34. ADC accuracy characteristics

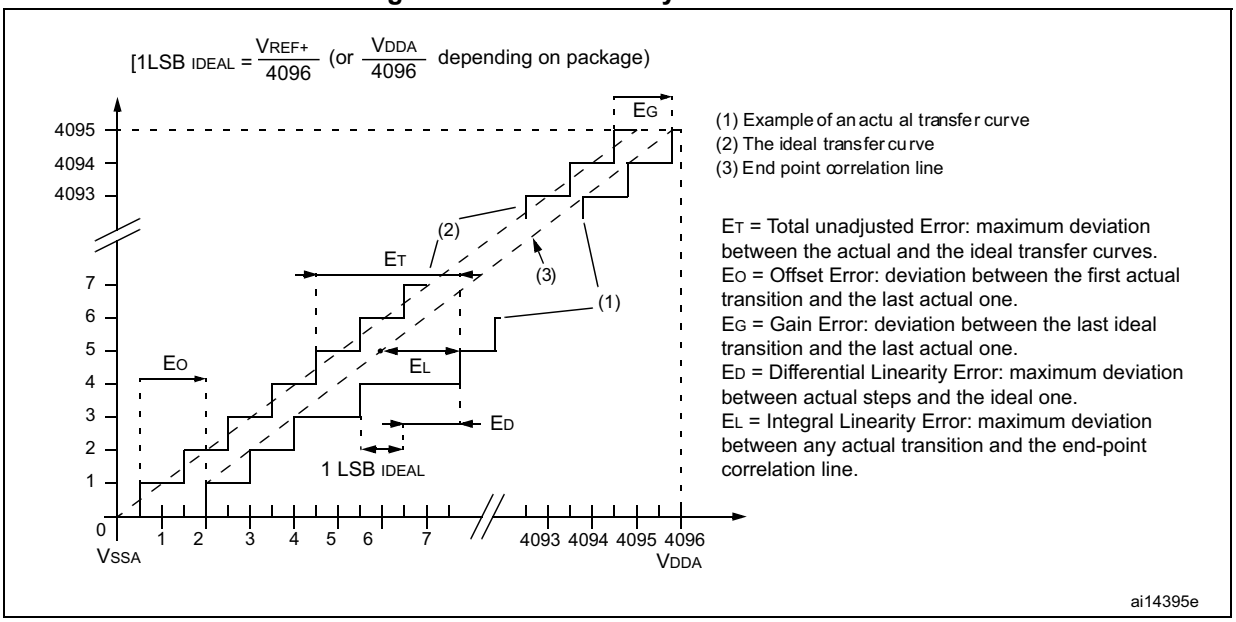

Figure 35. Typical connection diagram using the ADC

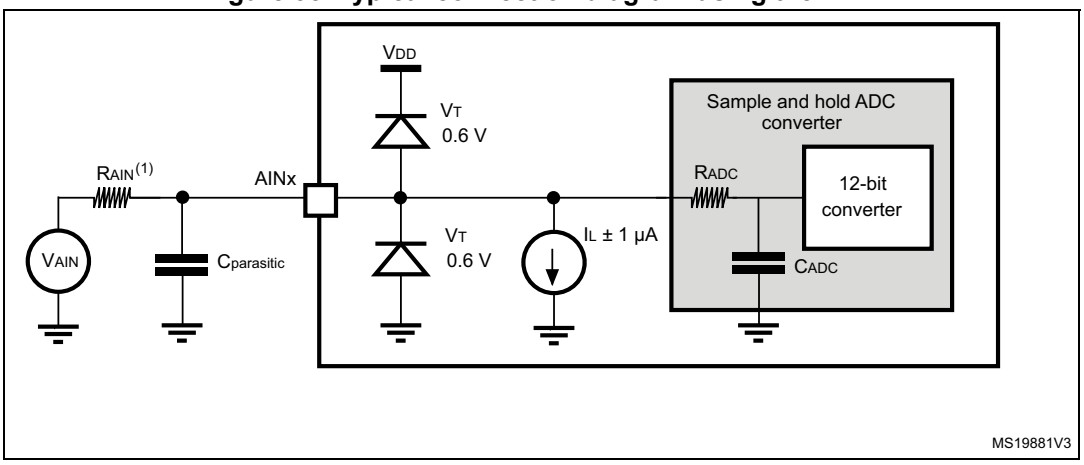

1. Refer to *Table 68* for the values of R_{AIN}.
2. $C_{parasitic}$ represents the capacitance of the PCB (dependent on soldering and PCB layout quality) plus the pad capacitance (roughly 7 pF). A high $C_{parasitic}$ value will downgrade conversion accuracy. To remedy this, f_{ADC} should be reduced.

General PCB design guidelines

Power supply decoupling should be performed as shown in *Figure 11*. The 10 nF capacitor should be ceramic (good quality) and it should be placed as close as possible to the chip.

6.3.19 DAC electrical specifications

Table 75. DAC characteristics

Symbol	Parameter	Conditions		Min	Typ	Max	Unit
V_{DDA}	Analog supply voltage	-		2.4	-	3.6	V
R_{LOAD}(1)	Resistive load	DAC output buffer ON	Connected to V_{SSA}	5	-	-	kΩ
			Connected to V_{DDA}	25	-	-	
R_O(1)	Output impedance	DAC output buffer OFF		-	-	15	kΩ
C_{LOAD}(1)	Capacitive load	DAC output buffer ON		-	-	50	pF
V_{DAC_OUT} (1)	Voltage on DAC_OUT output	Corresponds to 12-bit input code (0x0E0) to (0xF1C) at V_{DDA} = 3.6 V and (0x155) and (0xEAB) at V_{DDA} = 2.4 V DAC output buffer ON.		0.2	-	V_{DDA} – 0.2	V
		DAC output buffer OFF		-	0.5	V_{DDA} - 1LSB	mV
I_{DDA}(3)	DAC DC current consumption in quiescent mode (Standby mode)(2)	With no load, middle code (0x800) on the input.		-	-	380	µA
		With no load, worst code (0xF1C) on the input.		-	-	480	µA
DNL(3)	Differential non linearity Difference between two consecutive code-1LSB)	Given for a 10-bit input code		-	-	±0.5	LSB
		Given for a 12-bit input code		-	-	±2	LSB
INL(3)	Integral non linearity (difference between measured value at Code i and the value at Code i on a line drawn between Code 0 and last Code 4095)	Given for a 10-bit input code		-	-	±1	LSB
		Given for a 12-bit input code		-	-	±4	LSB
Offset(3)	Offset error (difference between measured value at Code (0x800) and the ideal value = $V_{DDA}/2$)	-		-	-	±10	mV
		Given for a 10-bit input code at V_{DDA} = 3.6 V		-	-	±3	LSB
		Given for a 12-bit input code at V_{DDA} = 3.6 V		-	-	±12	LSB
Gain error(3)	Gain error	Given for a 12-bit input code		-	-	±0.5	%
$t_{SETTLING}$(3)	Settling time (full scale: for a 12-bit input code transition between the lowest and the highest input codes when DAC_OUT reaches final value ±1LSB	$C_{LOAD} \leq 50$ pF, $R_{LOAD} \geq 5$ kΩ		-	3	4	µs
Update rate(3)	Max frequency for a correct DAC_OUT change when small variation in the input code (from code i to i+1LSB)	$C_{LOAD} \leq 50$ pF, $R_{LOAD} \geq 5$ kΩ		-	-	1	MS/s

Table 75. DAC characteristics (continued)

Symbol	Parameter	Conditions	Min	Typ	Max	Unit
t_{WAKEUP}(3)	Wakeup time from off state (Setting the ENx bit in the DAC Control register)	$C_{LOAD} \leq 50$ pF, $R_{LOAD} \geq 5$ kΩ	-	6.5	10	µs
PSRR+ (1)	Power supply rejection ratio (to V_{DDA}) (static DC measurement	$C_{LOAD} = 50$ pF, No $R_{LOAD} \geq 5$ kΩ	-	–67	–40	dB

1. Guaranteed by design.
2. Quiescent mode refers to the state of the DAC a keeping steady value on the output, so no dynamic consumption is involved.
3. Guaranteed by characterization results.

Figure 36. 12-bit buffered /non-buffered DAC

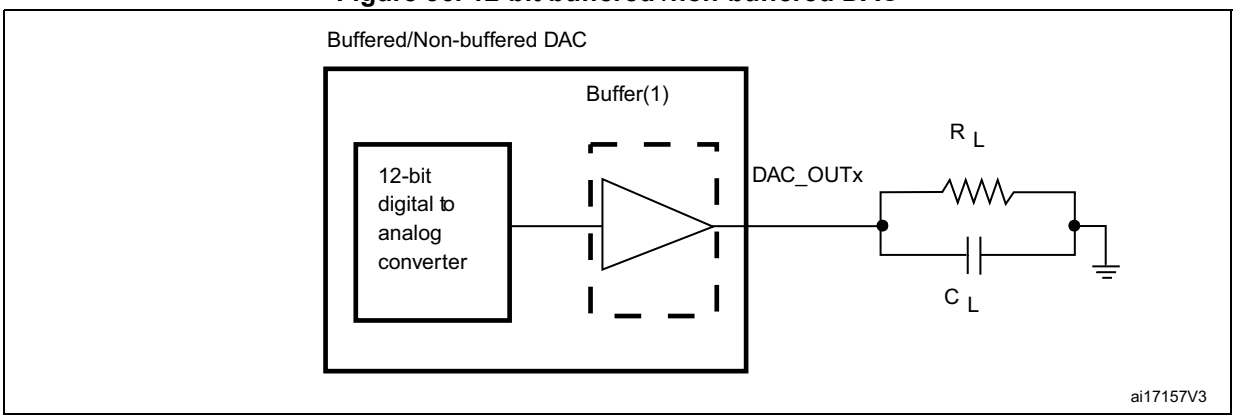

1. The DAC integrates an output buffer that can be used to reduce the output impedance and to drive external loads directly without the use of an external operational amplifier. The buffer can be bypassed by configuring the BOFFx bit in the DAC_CR register.

6.3.20 Comparator characteristics

Table 76. Comparator characteristics(1)

Symbol	Parameter	Conditions		Min	Typ	Max	Unit
V_{DDA}	Analog supply voltage	-		2	-	3.6	V
V_{IN}	Comparator input voltage range	-		0	-	V_{DDA}	
V_{BG}	Scaler input voltage	-		-	1.2	-	
V_{SC}	Scaler offset voltage	-		-	±5	±10	mV
t_{S_SC}	V_{REFINT} scaler startup time from power down	First V_{REFINT} scaler activation after device power on		-	-	1(2)	s
		Next activations		-	-	0.2	ms
t_{START}	Comparator startup time	Startup time to reach propagation delay specification		-	-	60	µs
t_D	Propagation delay for 200 mV step with 100 mV overdrive	Ultra-low-power mode		-	2	4.5	µs
		Low-power mode		-	0.7	1.5	
		Medium power mode		-	0.3	0.6	
		High speed mode	$V_{DDA} \geq 2.7$ V	-	50	100	ns
			$V_{DDA} < 2.7$ V	-	100	240	
	Propagation delay for full range step with 100 mV overdrive	Ultra-low-power mode		-	2	7	µs
		Low-power mode		-	0.7	2.1	
		Medium power mode		-	0.3	1.2	
		High speed mode	$V_{DDA} \geq 2.7$ V	-	90	180	ns
			$V_{DDA} < 2.7$ V	-	110	300	
V_{offset}	Comparator offset error	-		-	±4	±10	mV
dV_{offset}/dT	Offset error temperature coefficient	-		-	18	-	µV/°C
$I_{DD(COMP)}$	COMP current consumption	Ultra-low-power mode		-	1.2	1.5	µA
		Low-power mode		-	3	5	
		Medium power mode		-	10	15	
		High speed mode		-	75	100	

Table 76. Comparator characteristics(1) (continued)

Symbol	Parameter	Conditions		Min	Typ	Max	Unit
V_{hys}	Comparator hysteresis	No hysteresis (COMPxHYST[1:0]=00)	-	-	0	-	mV
		Low hysteresis (COMPxHYST[1:0]=01)	High speed mode	3	8	13	
			All other power modes	5		10	
		Medium hysteresis (COMPxHYST[1:0]=10)	High speed mode	7	15	26	
			All other power modes	9		19	
		High hysteresis (COMPxHYST[1:0]=11)	High speed mode	18	31	49	
			All other power modes	19		40	

1. Data guaranteed by design.
2. For more details and conditions, see *Figure 37* Maximum V_{REFINT} scaler startup time from power down.

Figure 37. Maximum V_{REFINT} scaler startup time from power down

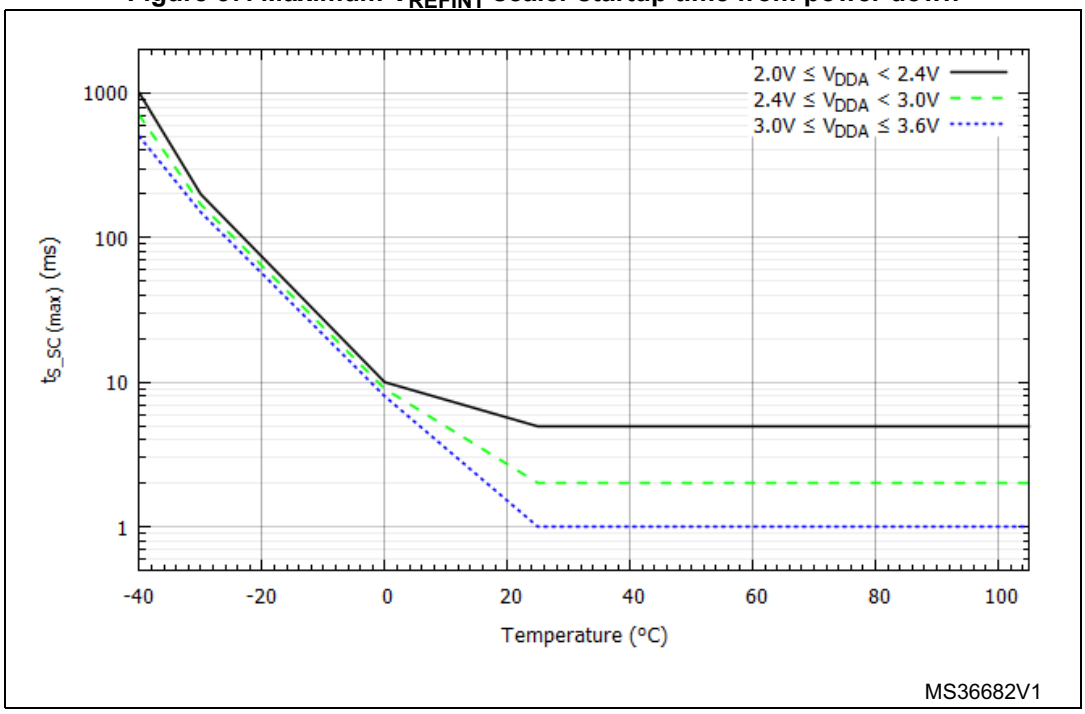

6.3.21 Operational amplifier characteristics

Table 77. Operational amplifier characteristics(1)

Symbol	Parameter		Condition	Min	Typ	Max	Unit
V_{DDA}	Analog supply voltage		-	2.4	-	3.6	V
CMIR	Common mode input range		-	0	-	V_{DDA}	V
VI_{OFFSET}	Input offset voltage	Maximum calibration range	25°C, No Load on output.	-	-	4	mV
			All voltage/Temp.	-	-	6	
		After offset calibration	25°C, No Load on output.	-	-	1.6	
			All voltage/Temp.	-	-	3	
ΔVI_{OFFSET}	Input offset voltage drift		-	-	5	-	µV/°C
I_{LOAD}	Drive current		-	-	-	500	µA
IDDOPAMP	Consumption		No load, quiescent mode	-	690	1450	µA
TS_OPAMP_VOUT	ADC sampling time when reading the OPAMP output.		-	400	-	-	ns
CMRR	Common mode rejection ratio		-	-	90	-	dB
PSRR	Power supply rejection ratio		DC	73	117	-	dB
GBW	Bandwidth		-	-	8.2	-	MHz
SR	Slew rate		-	-	4.7	-	V/µs
R_{LOAD}	Resistive load		-	4	-	-	kΩ
C_{LOAD}	Capacitive load		-	-	-	50	pF
VOH_{SAT}	High saturation voltage(2)		R_{load} = min, Input at V_{DDA}.	V_{DDA} -100	-	-	mV
			R_{load} = 20K, Input at V_{DDA}.	V_{DDA} -20	-	-	
VOL_{SAT}	High saturation voltage(2)		Rload = min, input at 0V	-	-	100	
			Rload = 20K, input at 0V.	-	-	20	
φm	Phase margin		-	-	62	-	°
$t_{OFFTRIM}$	Offset trim time: during calibration, minimum time needed between two steps to have 1 mV accuracy		-	-	-	2	ms
t_{WAKEUP}	Wake up time from OFF state.		C_{LOAD} ≤50 pf, R_{LOAD} ≥ 4 kΩ, Follower configuration	-	2.8	5	µs

Table 77. Operational amplifier characteristics(1) (continued)

Symbol	Parameter	Condition	Min	Typ	Max	Unit
PGA gain	Non inverting gain value	-	-	2	-	-
			-	4	-	-
			-	8	-	-
			-	16	-	-
$R_{network}$	R2/R1 internal resistance values in PGA mode (3)	Gain=2	-	5.4/5.4	-	kΩ
		Gain=4	-	16.2/5.4	-	
		Gain=8	-	37.8/5.4	-	
		Gain=16	-	40.5/2.7	-	
PGA gain error	PGA gain error	-	-1%	-	1%	
I_{bias}	OPAMP input bias current	-	-	-	±0.2(4)	µA
PGA BW	PGA bandwidth for different non inverting gain	PGA Gain = 2, Cload = 50pF, Rload = 4 KΩ	-	4	-	MHz
		PGA Gain = 4, Cload = 50pF, Rload = 4 KΩ	-	2	-	
		PGA Gain = 8, Cload = 50pF, Rload = 4 KΩ	-	1	-	
		PGA Gain = 16, Cload = 50pF, Rload = 4 KΩ	-	0.5	-	
en	Voltage noise density	@ 1KHz, Output loaded with 4 KΩ	-	109	-	$\frac{nV}{\sqrt{Hz}}$
		@ 10KHz, Output loaded with 4 KΩ	-	43	-	

1. Guaranteed by design.
2. The saturation voltage can be also limited by the Iload (drive current).
3. R2 is the internal resistance between OPAMP output and OPAMP inverting input.
   R1 is the internal resistance between OPAMP inverting input and ground.
   The PGA gain =1+R2/R1
4. Mostly TTa I/O leakage, when used in analog mode.

Figure 38. OPAMP voltage noise versus frequency

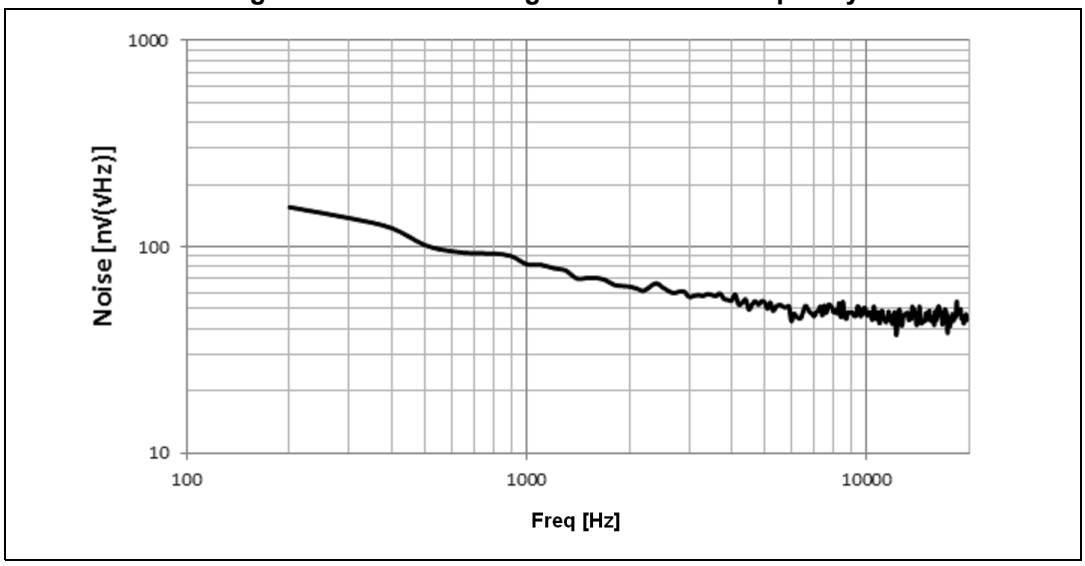

6.3.22 Temperature sensor characteristics

Table 78. TS characteristics

Symbol	Parameter	Min	Typ	Max	Unit
T_L(1)	V_{SENSE} linearity with temperature	-	±1	±2	°C
Avg_Slope(1)	Average slope	4.0	4.3	4.6	mV/°C
V_{25}	Voltage at 25 °C	1.34	1.43	1.52	V
t_{START}(1)	Startup time	4	-	10	µs
T_{S_temp}(1)(2)	ADC sampling time when reading the temperature	2.2	-	-	µs

1. Guaranteed by design.
2. Shortest sampling time can be determined in the application by multiple iterations.

Table 79. Temperature sensor calibration values

Calibration value name	Description	Memory address
TS_CAL1	TS ADC raw data acquired at temperature of 30 °C, V_{DDA}= 3.3 V	0x1FFF F7B8 - 0x1FFF F7B9
TS_CAL2	TS ADC raw data acquired at temperature of 110 °C V_{DDA}= 3.3 V	0x1FFF F7C2 - 0x1FFF F7C3

6.3.23 V_{BAT} monitoring characteristics

Table 80. V_{BAT} monitoring characteristics

Symbol	Parameter	Min	Typ	Max	Unit
R	Resistor bridge for V_{BAT}	-	50	-	KΩ
Q	Ratio on V_{BAT} measurement	-	2	-	
Er(1)	Error on Q	-1	-	+1	%
T_{S_vbat}(1)(2)	ADC sampling time when reading the V_{BAT} 1mV accuracy	2.2	-	-	µs

1. Guaranteed by design.
2. Shortest sampling time can be determined in the application by multiple iterations.

7 Package information

In order to meet environmental requirements, ST offers these devices in different grades of ECOPACK® packages, depending on their level of environmental compliance. ECOPACK® specifications, grade definitions and product status are available at: *www.st.com*. ECOPACK® is an ST trademark.

7.1 LQFP100 – 14 x 14 mm, low-profile quad flat package information

Figure 39. LQFP100 – 14 x 14 mm, low-profile quad flat package outline

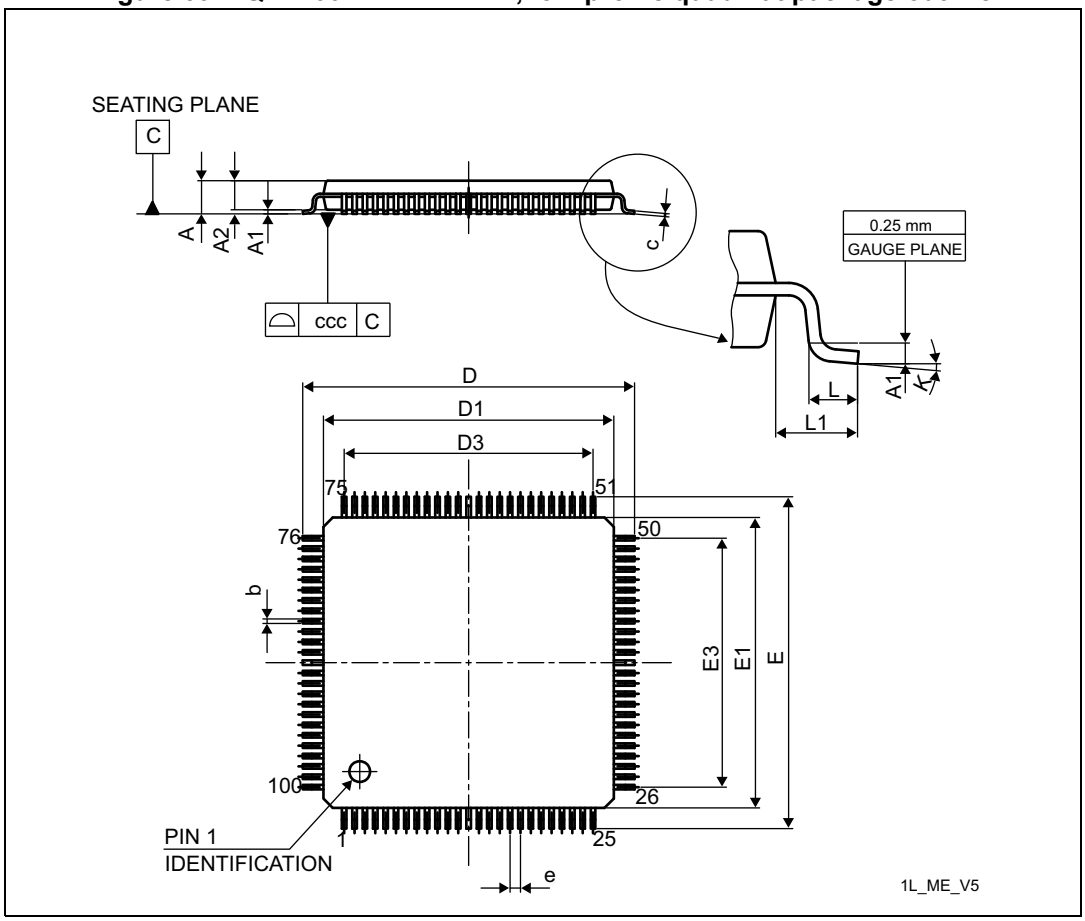

1. Drawing is not to scale.

Table 81. LQPF100 – 14 x 14 mm, low-profile quad flat package mechanical data

Symbol	millimeters			inches(1)		
	Min	Typ	Max	Min	Typ	Max
A	-	-	1.60	-	-	0.063
A1	0.05	-	0.15	0.002	-	0.0059

Table 81. LQPF100 – 14 x 14 mm, low-profile quad flat package mechanical data (continued)

Symbol	millimeters			inches[1]		
	Min	Typ	Max	Min	Typ	Max
A2	1.35	1.40	1.45	0.0531	0.0551	0.0571
b	0.17	0.22	0.27	0.0067	0.0087	0.0106
c	0.09	-	0.2	0.0035	-	0.0079
D	15.80	16.00	16.2	0.622	0.6299	0.6378
D1	13.80	14.00	14.2	0.5433	0.5512	0.5591
D3	-	12.00	-	-	0.4724	-
E	15.80	16.00	16.2	0.622	0.6299	0.6378
E1	13.80	14.00	14.2	0.5433	0.5512	0.5591
E3	-	12.00	-	-	0.4724	-
e	-	0.50	-	-	0.0197	-
L	0.45	0.60	0.75	0.0177	0.0236	0.0295
L1	-	1.00	-	-	0.0394	-
K	0°	3.5°	7°	0°	3.5°	7°
ccc	-	-	0.08	-	-	0.0031

1. Values in inches are converted from mm and rounded to 4 decimal digits.

Figure 40. LQFP100 – 14 x 14 mm, low-profile quad flat package recommended footprint

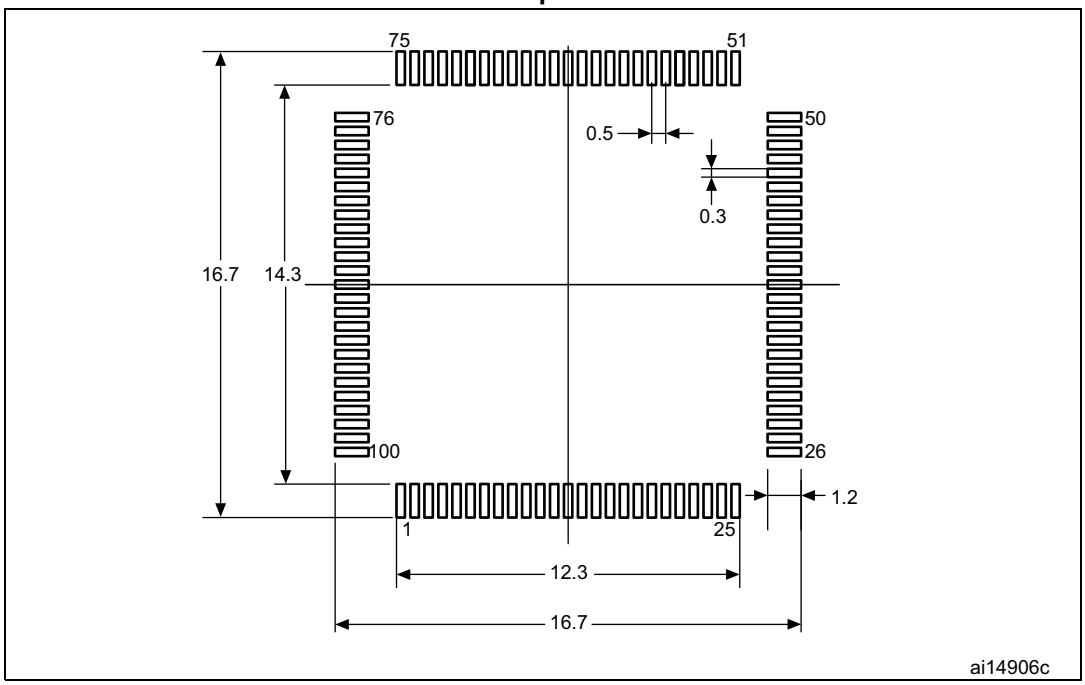

1. Dimensions are in millimeters.

LQFP100 device marking

The following figure gives an example of topside marking orientation versus pin 1 identifier location.

The printed markings may differ depending on the supply chain.

Other optional marking or inset/upset marks, which identify the parts throughout supply chain operations, are not indicated below.

Figure 41. LQFP100 – 14 x 14 mm, low-profile quad flat package top view example

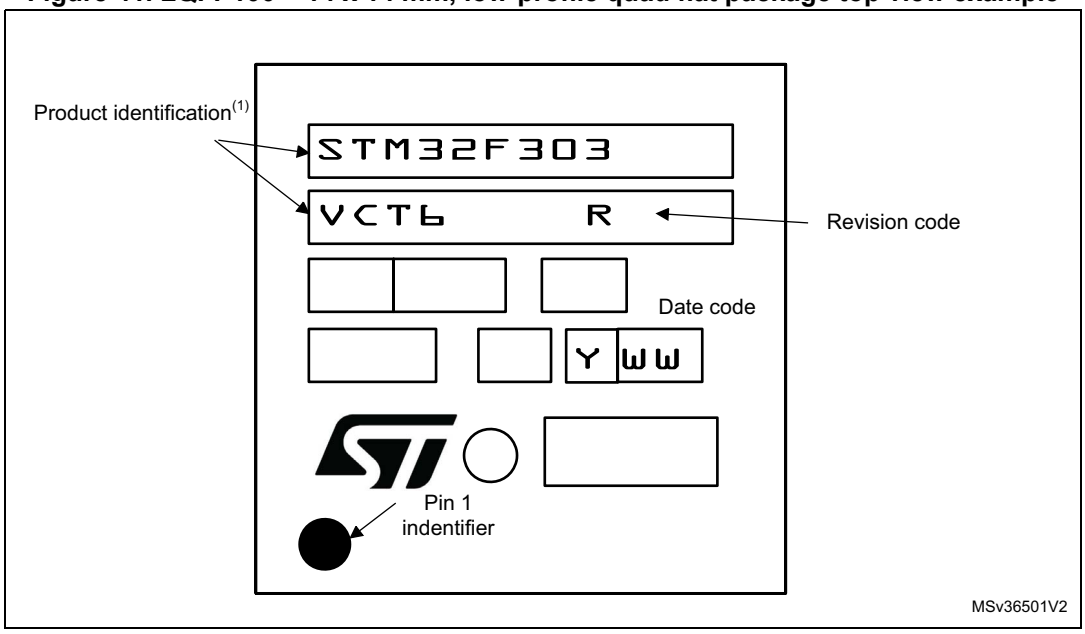

1. Parts marked as ES or E or accompanied by an engineering sample notification letter are not yet qualified and therefore not approved for use in production. ST is not responsible for any consequences resulting from such use. In no event will ST be liable for the customer using any of these engineering samples in production. ST's Quality department must be contacted prior to any decision to use these engineering samples to run a qualification activity.

7.2 LQFP64 – 10 x 10 mm, low-profile quad flat package information

Figure 42. LQFP64 – 10 x 10 mm, low-profile quad flat package outline

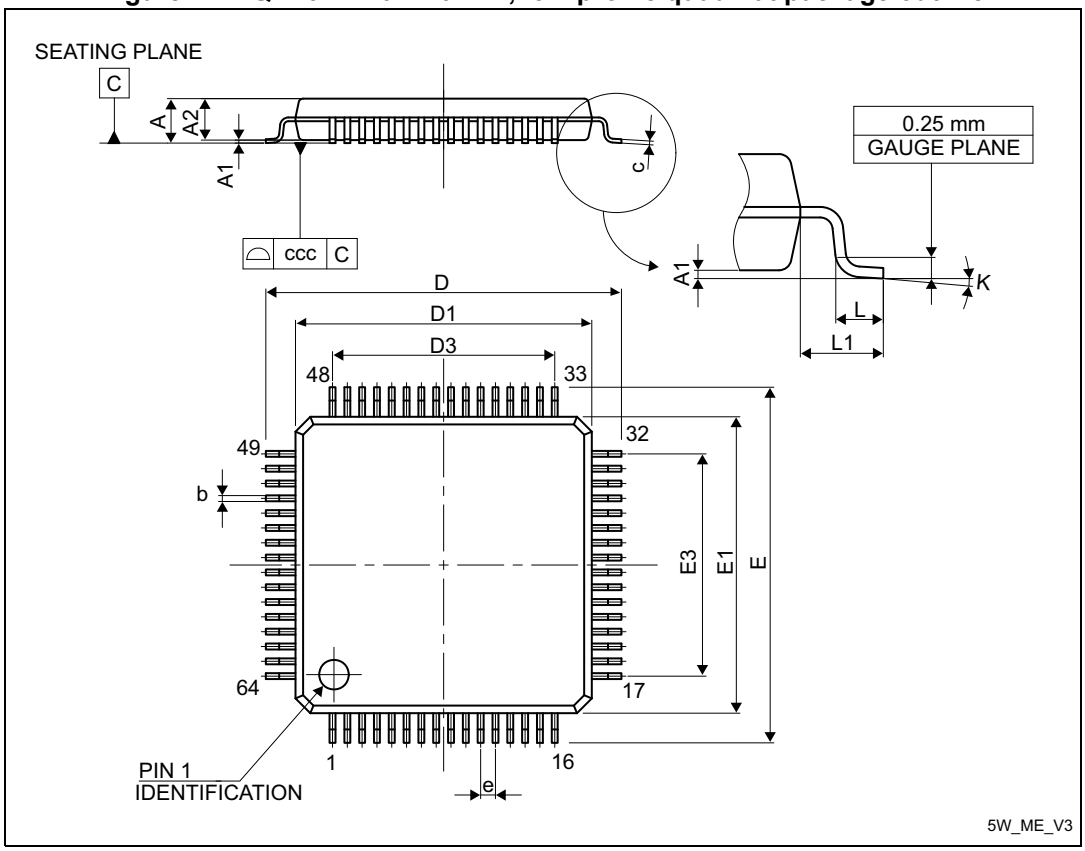

1. Drawing is not to scale.

Table 82. LQFP64 – 10 x 10 mm, low-profile quad flat package mechanical data

Symbol	millimeters			inches(1)		
	Min	Typ	Max	Min	Typ	Max
A	-	-	1.60	-	-	0.0630
A1	0.05	-	0.15	0.0020	-	0.0059
A2	1.350	1.40	1.45	0.0531	0.0551	0.0571
b	0.17	0.22	0.27	0.0067	0.0087	0.0106
c	0.09	-	0.20	0.0035		0.0079
D	-	12.00	-	-	0.4724	-
D1	-	10.00	-	-	0.3937	-
D3	-	7.50	-	-	0.2953	-
E	-	12.00	-	-	0.4724	-

Table 82. LQFP64 – 10 x 10 mm, low-profile quad flat package mechanical data (continued)

Symbol	millimeters			inches[1]		
	Min	Typ	Max	Min	Typ	Max
E1	-	10.00	-	-	0.3937	-
E3	-	7.50	-	-	0.2953	-
e	-	0.50	-	-	0.0197	-
K	0°	3.5°	7°	0°	3.5°	7°
L	0.45	0.60	0.75	0.0177	0.0236	0.0295
L1	-	1.00	-	-	0.0394	-
ccc	-	-	0.08	-	-	0.0031

1. Values in inches are converted from mm and rounded to 4 decimal digits.

Figure 43. LQFP64 – 10 x 10 mm, low-profile quad flat package recommended footprint

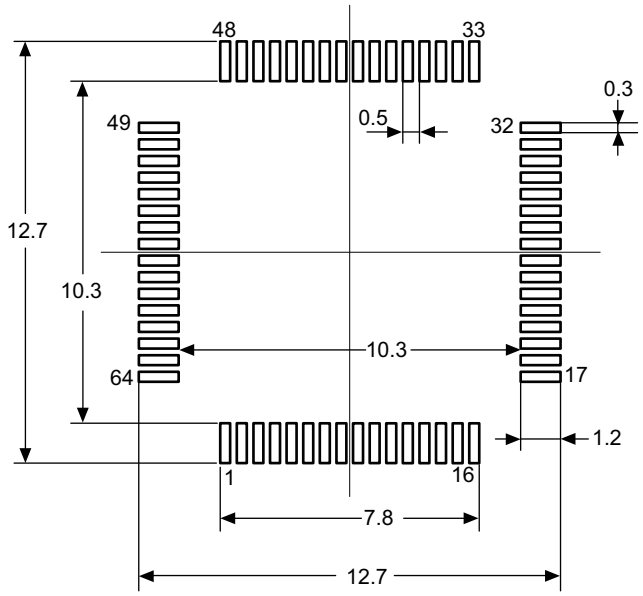

1. Dimensions are in millimeters.

LQFP64 device marking

The following figure gives an example of topside marking orientation versus pin 1 identifier location.

The printed markings may differ depending on the supply chain.

Other optional marking or inset/upset marks, which identify the parts throughout supply chain operations, are not indicated below.

Figure 44. LQFP64 – 10 x 10 mm, low-profile quad flat package top view example

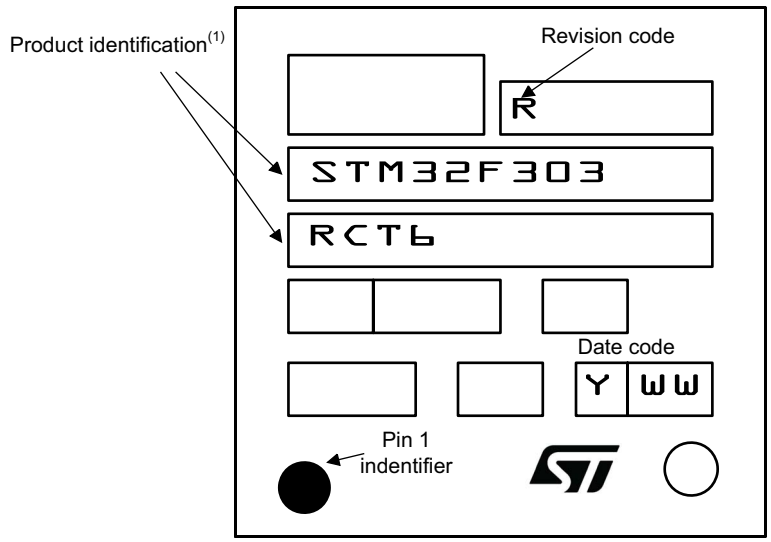

1. Parts marked as ES or E or accompanied by an engineering sample notification letter are not yet qualified and therefore not approved for use in production. ST is not responsible for any consequences resulting from such use. In no event will ST be liable for the customer using any of these engineering samples in production. ST's Quality department must be contacted prior to any decision to use these engineering samples to run a qualification activity.

7.3 LQFP48 – 7 x 7 mm, low-profile quad flat package information

Figure 45. LQFP48 – 7 x 7 mm, low-profile quad flat package outline

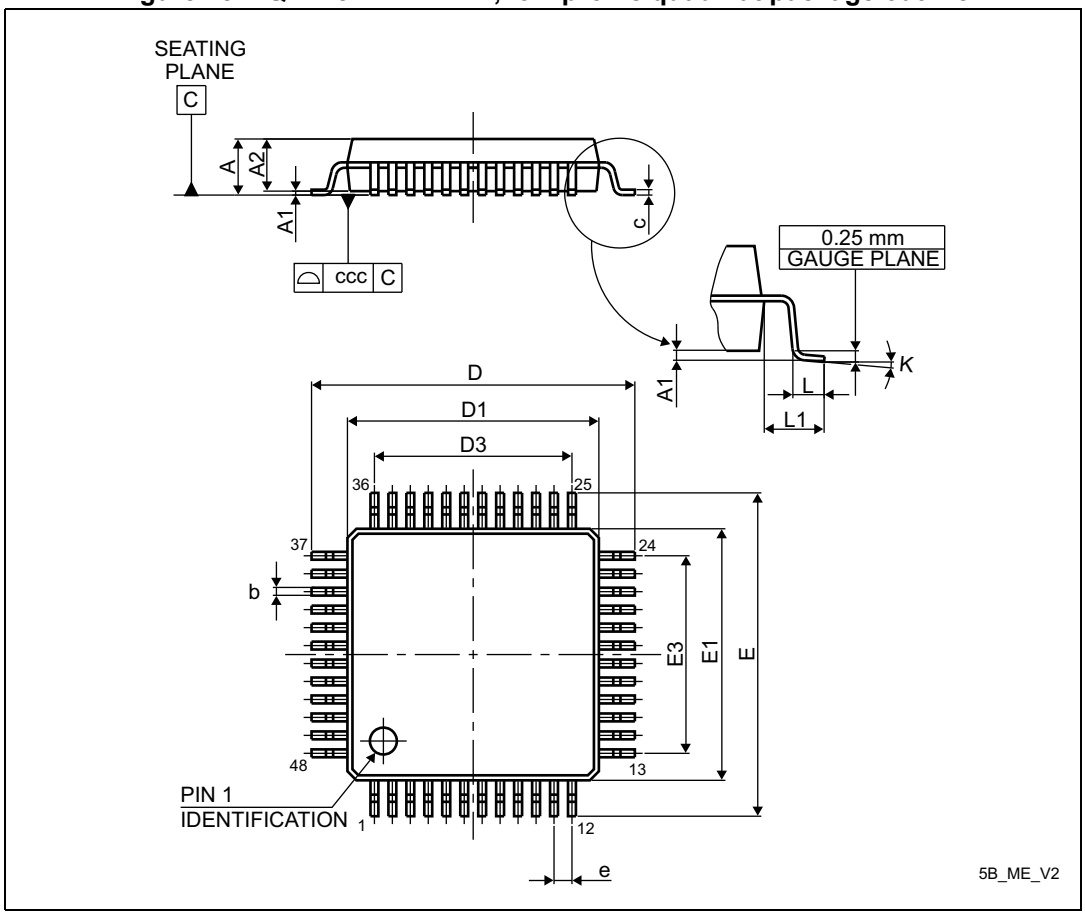

1. Drawing is not to scale.

Table 83. LQFP48 – 7 x 7 mm, low-profile quad flat package mechanical data

Symbol	millimeters			inches(1)		
	Min	Typ	Max	Min	Typ	Max
A	-	-	1.60	-	-	0.0630
A1	0.05	-	0.15	0.0020	-	0.0059
A2	1.35	1.40	1.45	0.0531	0.0551	0.0571
b	0.17	0.22	0.27	0.0067	0.0087	0.0106
c	0.09	-	0.20	0.0035	-	0.0079
D	8.80	9.00	9.20	0.3465	0.3543	0.3622
D1	6.80	7.00	7.20	0.2677	0.2756	0.2835
D3	-	5.50	-	-	0.2165	-
E	8.80	9.00	9.20	0.3465	0.3543	0.3622

Table 83. LQFP48 – 7 x 7 mm, low-profile quad flat package mechanical data (continued)

Symbol	millimeters			inches[1]		
	Min	Typ	Max	Min	Typ	Max
E1	6.80	7.00	7.20	0.2677	0.2756	0.2835
E3	-	5.50	-	-	0.2165	-
e	-	0.50	-	-	0.0197	-
L	0.45	0.60	0.75	0.0177	0.0236	0.0295
L1	-	1.00	-	-	0.0394	-
K	0°	3.5°	7°	0°	3.5°	7°
ccc	-	-	0.08	-	-	0.0031

1. Values in inches are converted from mm and rounded to 4 decimal digits.

Figure 46. LQFP48 - 7 x 7 mm, low-profile quad flat package recommended footprint

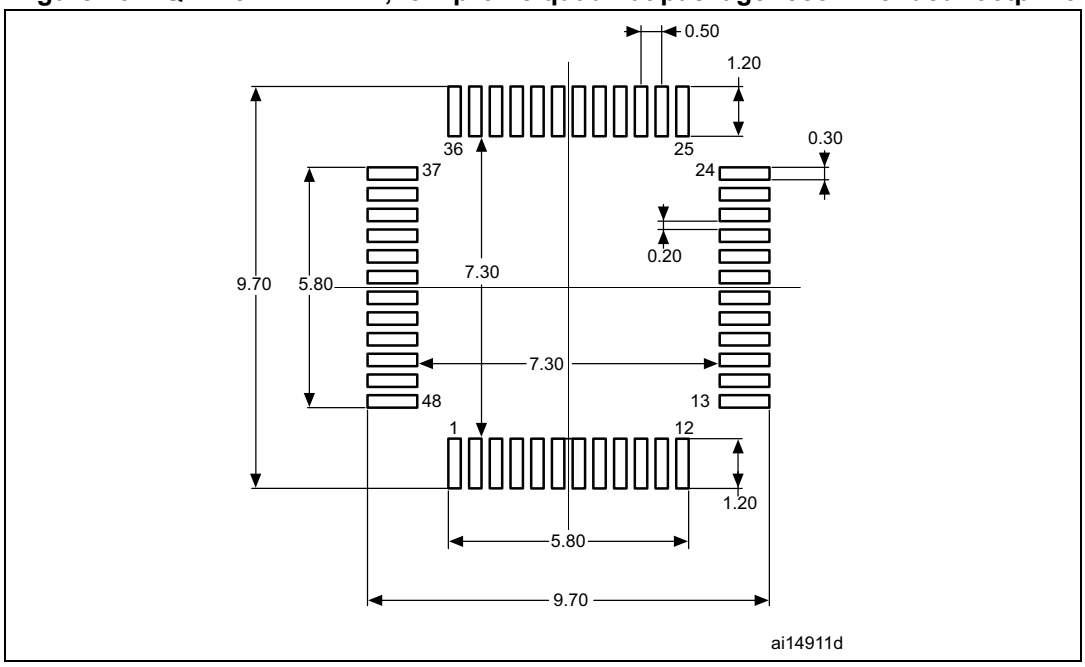

1. Dimensions are in millimeters.

LQFP48 device marking

The following figure gives an example of topside marking orientation versus pin 1 identifier location.

The printed markings may differ depending on the supply chain.

Other optional marking or inset/upset marks, which identify the parts throughout supply chain operations, are not indicated below.

Figure 47. LQFP48 - 7 x 7 mm, low-profile quad flat package top view example

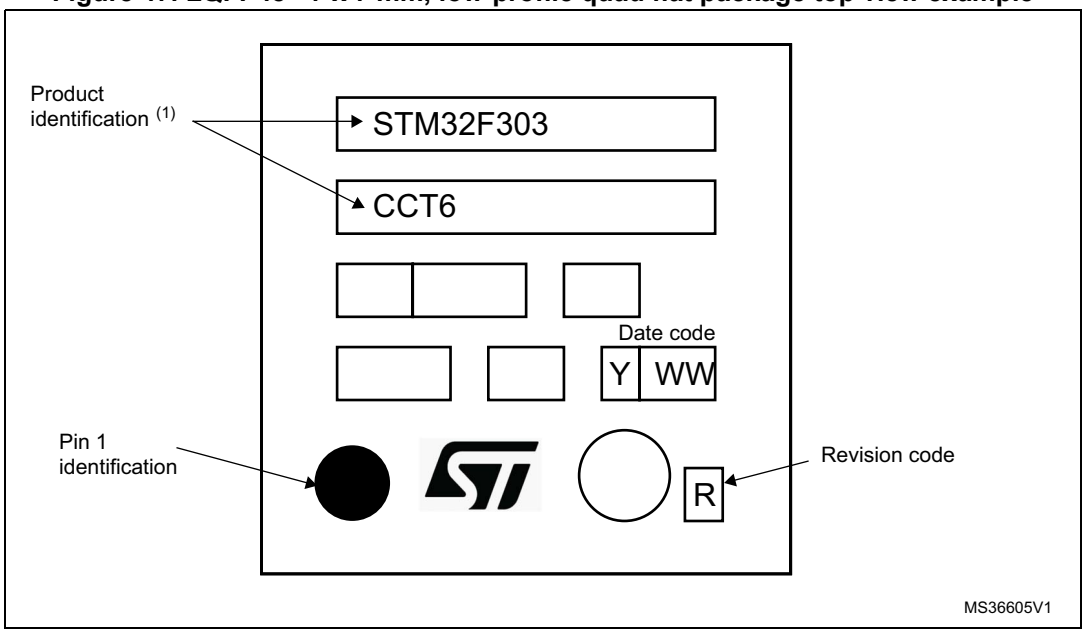

1. Parts marked as ES or E or accompanied by an engineering sample notification letter are not yet qualified and therefore not approved for use in production. ST is not responsible for any consequences resulting from such use. In no event will ST be liable for the customer using any of these engineering samples in production. ST's Quality department must be contacted prior to any decision to use these engineering samples to run a qualification activity.

7.4 WLCSP100 - 0.4 mm pitch wafer level chip scale package information

Figure 48. WLCSP100 – 100L, 4.166 x 4.628 mm 0.4 mm pitch wafer level chip scale package outline

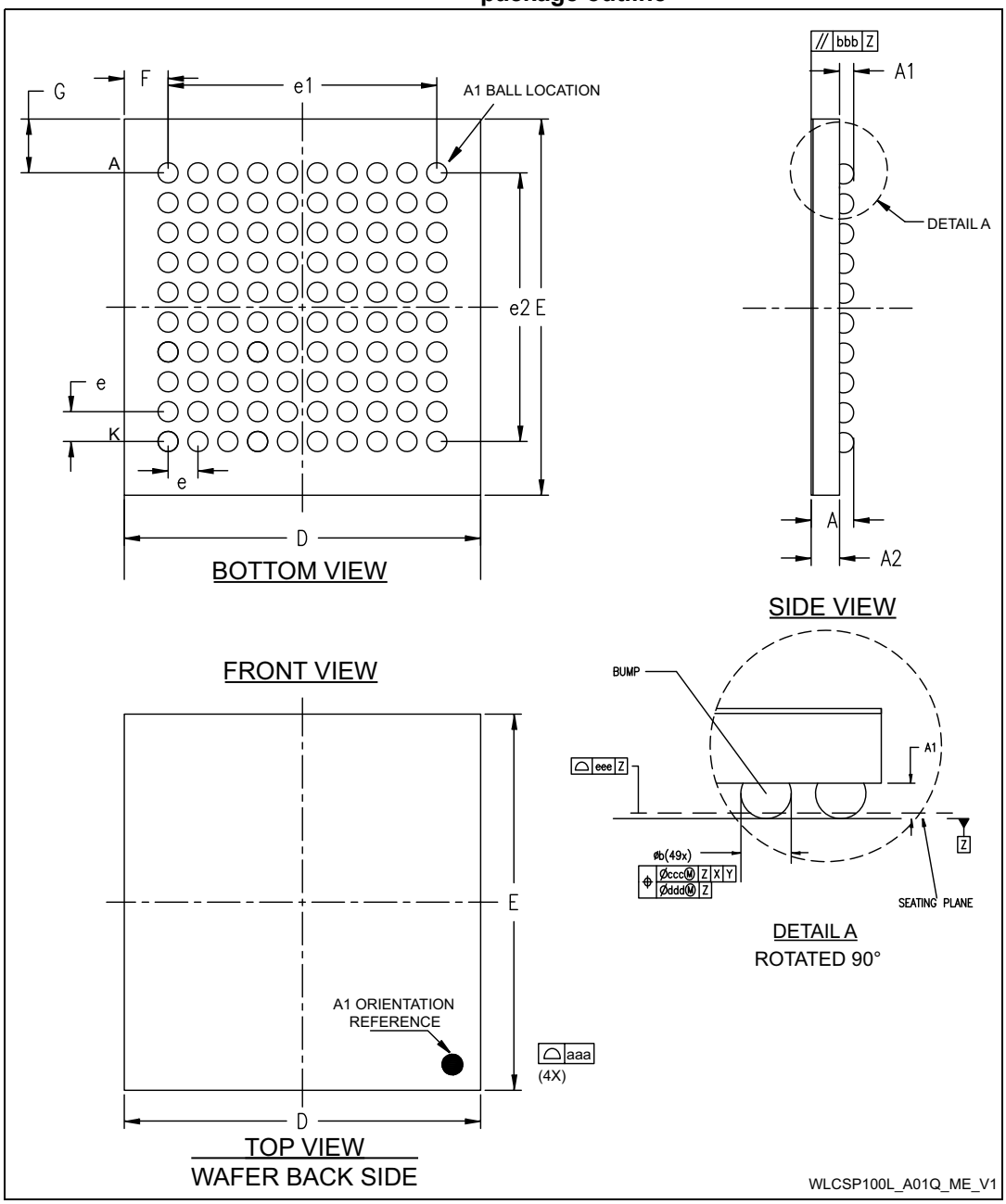

1. Drawing is not to scale.

Table 84. WLCSP100 – 100L, 4.166 x 4.628 mm 0.4 mm pitch wafer level chip scale package mechanical data

Symbol	millimeters			inches[1]		
	Min	Typ	Max	Typ	Min	Max
A	0.525	0.555	0.585	0.0207	0.0219	0.0230
A1	-	0.17	-	-	0.0067	-
A2	-	0.38	-	-	0.0150	-
A3[2]	-	0.025	-	-	0.0010	-
Ø b[3]	0.22	0.25	0.28	-	0.0098	0.0110
D	4.166	4.201	4.236	-	0.1654	0.1668
E	4.628	4.663	4.698	-	0.1836	0.1850
e	-	0.4	-	-	0.0157	-
e1	-	3.6	-	-	0.1417	-
e2	-	3.6	-	-	0.1417	-
F	-	0.3005	-	-	0.0118	-
G	-	0.5315	-	-	0.0209	-
N	-	100	-	-	3.9370	-
aaa	-	0.1	-	-	0.0039	-
bbb	-	0.1	-	-	0.0039	-
ccc	-	0.1	-	-	0.0039	-
ddd	-	0.05	-	-	0.0020	-
eee	-	0.05	-	-	0.0020	-

1. Values in inches are converted from mm and rounded to 4 decimal digits.
2. Back side coating.
3. Dimension is measured at the maximum bump diameter parallel to primary datum Z.

Figure 49. WLCSP100 – 100L, 4.166 x 4.628 mm 0.4 mm pitch wafer level chip scale package recommended footprint

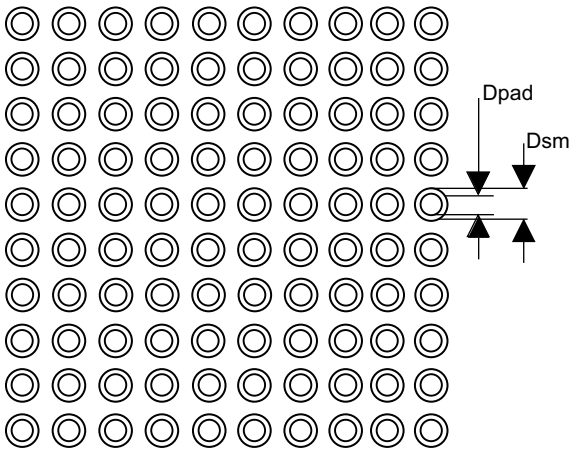

Table 85. WLCSP100 recommended PCB design rules (0.4 mm pitch)

Dimension	Recommended values
Pitch	0.4 mm
Dpad	0.225 mm
Dsm	0.290 mm
Stencil thickness	0.1 mm

WLCSP100 device marking

The following figure gives an example of topside marking orientation versus ball A1 identifier location.

The printed markings may differ depending on the supply chain.

Other optional marking or inset/upset marks, which identify the parts throughout supply chain operations, are not indicated below.

Figure 50. WLCSP100, 0.4 mm pitch wafer level chip scale package top view example

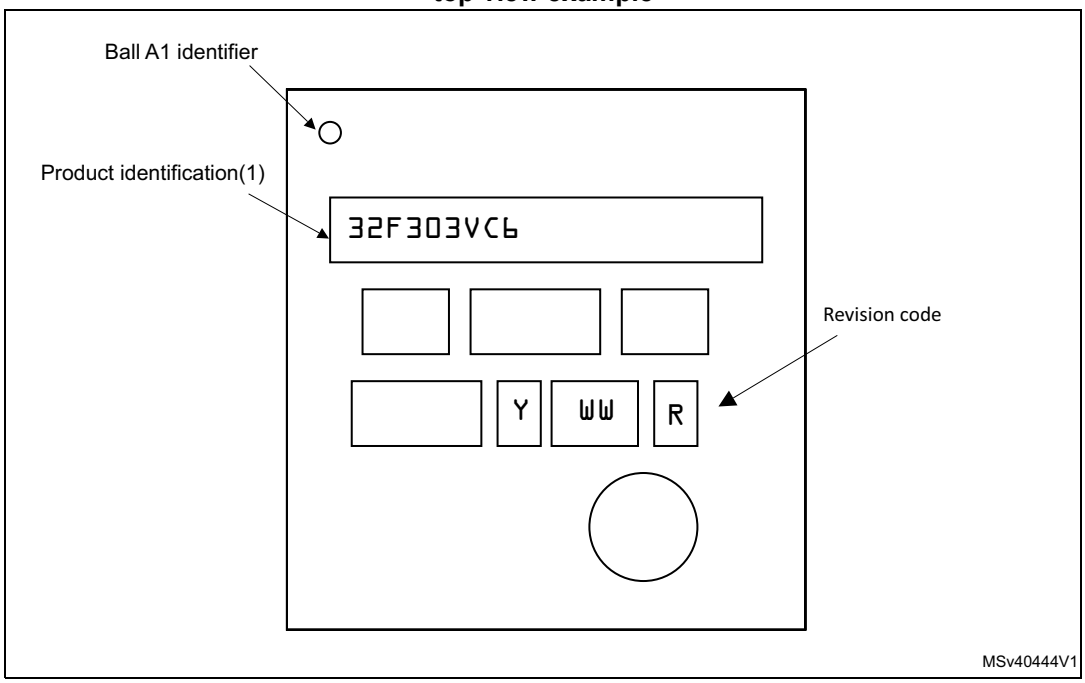

1. Parts marked as ES or E or accompanied by an engineering sample notification letter are not yet qualified and therefore not approved for use in production. ST is not responsible for any consequences resulting from such use. In no event will ST be liable for the customer using any of these engineering samples in production. ST's Quality department must be contacted prior to any decision to use these engineering samples to run a qualification activity.

7.5 Thermal characteristics

The maximum chip junction temperature ($T_J$max) must never exceed the values given in *Table 24: General operating conditions on page 60*.

The maximum chip-junction temperature, T_J max, in degrees Celsius, may be calculated using the following equation:

$$T_J \text{ max} = T_A \text{ max} + (P_D \text{ max x } \Theta_{JA})$$

Where:

- T_A max is the maximum ambient temperature in °C,
- Θ_{JA} is the package junction-to-ambient thermal resistance, in °C/W,
- P_D max is the sum of P_{INT} max and $P_{I/O}$ max (P_D max = P_{INT} max + $P_{I/O}$max),
- P_{INT} max is the product of I_{DD} and V_{DD}, expressed in Watts. This is the maximum chip internal power.

$P_{I/O}$ max represents the maximum power dissipation on output pins where:

$$P_{I/O} \text{ max} = \Sigma (V_{OL} \times I_{OL}) + \Sigma((V_{DD} - V_{OH}) \times I_{OH}),$$

taking into account the actual V_{OL} / I_{OL} and V_{OH} / I_{OH} of the I/Os at low and high level in the application.

Table 86. Package thermal characteristics

Symbol	Parameter	Value	Unit
Θ_{JA}	**Thermal resistance junction-ambient** LQFP64 - 10 × 10 mm / 0.5 mm pitch	45	°C/W
	Thermal resistance junction-ambient LQFP48 - 7 × 7 mm	55	
	Thermal resistance junction-ambient LQFP100 - 14 × 14 mm / 0.5 mm pitch	41	
	Thermal resistance junction-ambient WLCSP100 - 0.4 mm pitch	40	

7.5.1 Reference document

JESD51-2 Integrated Circuits Thermal Test Method Environment Conditions - Natural Convection (Still Air). Available from www.jedec.org

7.5.2 Selecting the product temperature range

When ordering the microcontroller, the temperature range is specified in the ordering information scheme shown in *Section 8: Ordering information*.

Each temperature range suffix corresponds to a specific guaranteed ambient temperature at maximum dissipation and, to a specific maximum junction temperature.

As applications do not commonly use the STM32F303xB/STM32F303xC at maximum dissipation, it is useful to calculate the exact power consumption and junction temperature to determine which temperature range will be best suited to the application.

The following examples show how to calculate the temperature range needed for a given application.

Example 1: High-performance application

Assuming the following application conditions:

Maximum ambient temperature T_{Amax} = 82 °C (measured according to JESD51-2), I_{DDmax} = 50 mA, V_{DD} = 3.5 V, maximum 3 I/Os used at the same time in output at low level with I_{OL} = 8 mA, V_{OL}= 0.4 V and maximum 2 I/Os used at the same time in output at low level with I_{OL} = 20 mA, V_{OL}= 1.3 V

P_{INTmax} = 50 mA × 3.5 V= 175 mW

P_{IOmax} = 3 × 8 mA × 0.4 V + 2 × 20 mA × 1.3 V = 61.6 mW

This gives: P_{INTmax} = 175 mW and P_{IOmax} = 61.6 mW:

P_{Dmax} = 175 + 61.6 = 236.6 mW

Thus: P_{Dmax} = 236.6 mW

Using the values obtained in *Table 86* T_{Jmax} is calculated as follows:

– For LQFP64, 45°C/W

T_{Jmax} = 82 °C + (45°C/W × 236.6 mW) = 82 °C + 10.65 °C = 92.65 °C

This is within the range of the suffix 6 version parts (–40 < T_J < 105 °C).

In this case, parts must be ordered at least with the temperature range suffix 6 (see *Section 8: Ordering information*).

Example 2: High-temperature application

Using the same rules, it is possible to address applications that run at high ambient temperatures with a low dissipation, as long as junction temperature T_J remains within the specified range.

Assuming the following application conditions:

Maximum ambient temperature T_{Amax} = 115 °C (measured according to JESD51-2), I_{DDmax} = 20 mA, V_{DD} = 3.5 V, maximum 9 I/Os used at the same time in output at low level with I_{OL} = 8 mA, V_{OL}= 0.4 V

P_{INTmax} = 20 mA × 3.5 V= 70 mW

P_{IOmax} = 9 × 8 mA × 0.4 V = 28.8 mW

This gives: P_{INTmax} = 70 mW and P_{IOmax} = 28.8 mW:

P_{Dmax} = 70 + 28.8 = 98.8 mW

Thus: P_{Dmax} = 98.8 mW

Using the values obtained in *Table 86* T_{Jmax} is calculated as follows:

– For LQFP100, 41°C/W

T_{Jmax} = 115 °C + (41°C/W × 98.8 mW) = 115 °C + 4.05 °C = 119.05 °C

This is within the range of the suffix 7 version parts (–40 < T_J < 125 °C).

In this case, parts must be ordered at least with the temperature range suffix 7 (see *Section 8: Ordering information*).

8 Ordering information

Table 87. Ordering information scheme

Example: STM32 F 303 R B T 6 xxx

Device family
STM32 = Arm-based 32-bit microcontroller

Product type
F = general-purpose

Device subfamily
303 = STM32F303xx

Pin count
C = 48 pins
R = 64 pins
V = 100 pins

Flash memory size
B = 128 Kbytes of Flash memory
C = 256 Kbytes of Flash memory

Package
T = LQFP
Y = WLCSP

Temperature range
6 = Industrial temperature range, –40 to 85 °C
7 = Industrial temperature range, –40 to 105 °C

Options
xxx = programmed parts
TR = tape and reel

For a list of available options (speed, package, etc.) or for further information on any aspect of this device, please contact your nearest ST sales office.

9 Revision history

Table 88. Document revision history

Date	Revision	Changes
22-Jun-2012	1	Initial release
07-Sep-2012	2	Modified *Features* on cover page. Modified *Table 2: STM32F301xx family device features and peripheral counts* Added clock tree to *Section 3.9: Clocks and startup* Added *Table 10: STM32F302xB/STM32F302xC I2C implementation* Added *Table 11: USART features* Added *Table 12: STM32F302xB/STM32F302xC SPI/I2S implementation* Modified *Table 13: Capacitive sensing GPIOs available on STM32F302xB/STM32F302xC devices* Modified *Figure 7*, *Figure 8* and *Figure 9: STM32F302xB/STM32F302xC LQFP100 pinout* Modified *Table 16: STM32F302xB/STM32F302xC pin definitions* Modified *Figure 11: Power supply scheme* Modified *Table 21: Voltage characteristics* Modified *Table 22: Current characteristics* Modified *Table 25: Operating conditions at power-up / power-down* Added footnote to *Table 31: Typical and maximum current consumption from the V_{DDA} supply* Added footnote to *Table 35* and *Table 36: Typical current consumption in Sleep mode, code running from Flash or RAM* Removed table “Switching output I/O current consumption” and table “Peripheral current consumption” Added note under *Figure 17: Typical application with a 32.768 kHz crystal* Updated *Table 44: HSI oscillator characteristics* Updated *Wakeup time from low-power mode* and *Table 39: Low-power mode wakeup timings* Updated *Table 47: Flash memory characteristics* Updated *Table 52: Electrical sensitivities* Updated *Table 53: I/O current injection susceptibility* Updated *Table 54: I/O static characteristics* Updated *Table 55: Output voltage characteristics* Updated *Table 57: NRST pin characteristics* Updated *Table 63: SPI characteristics* Updated *Table 64: I^2S characteristics* Corrected LQFP100 in *Section 7.2.3: Selecting the product temperature range*
21-Sep-2012	3	Updated *Table 63: SPI characteristics*

Table 88. Document revision history (continued)

Date	Revision	Changes
05-Dec-2012	4	Updated first page Removed references to VDDSDx and VSSSD Added reference to PM0214 in *Section 1* Moved Temp. sensor calibartion values to*Table 79* and VREF calibration values to *Table 29* Updated *Table 3: STM32F303xx family device features and peripheral counts* Updated*Section 3.4: Embedded SRAM* Updated *Section 3.2: Memory protection unit (MPU)* Updated *Section 3.24: Universal serial bus (USB)* Modified *Section 3.26: Touch sensing controller (TSC)* Updated heading of *Table 11: USART features* Updated *Table 16: STM32F302xB/STM32F302xC pin definitions* Added notes to PC13, PC14 and PC15 in *Table 16: STM32F302xB/STM32F302xC pin definitions* Updated *Figure 11: Power supply scheme* Modified *Table 21: Voltage characteristics* Modified *Table 22: Current characteristics* Modified *Table 24: General operating conditions* Modified *Figure 13: Typical V_{BAT} current consumption (LSE and RTC ON/LSEDRV[1:0] = '00')* Updated *Section 6.3.14: I/O port characteristics* Updated *Table 30: Typical and maximum current consumption from V_{DD} supply at V_{DD} = 3.6V* and *Table 31: Typical and maximum current consumption from the V_{DDA} supply* Updated *Table 32: Typical and maximum V_{DD} consumption in Stop and Standby modes* and *Table 33: Typical and maximum V_{DDA} consumption in Stop and Standby modes* Updated *Table 34: Typical and maximum current consumption from V_{BAT} supply* Added *Figure 13: Typical V_{BAT} current consumption (LSE and RTC ON/LSEDRV[1:0] = '00')* Updated *Table 35: Typical current consumption in Run mode, code with data processing running from Flash* and *Table 36: Typical current consumption in Sleep mode, code running from Flash or RAM* Added *Table 38: Peripheral current consumption* Added *Table 37: Switching output I/O current consumption* Updated *Section 6.3.6: Wakeup time from low-power mode* Modified *ESD absolute maximum ratings* Modified *Table 55: Output voltage characteristics* Updated *EMI characteristics* Updated *Table 56: I/O AC characteristics* Updated *Table 53: I/O current injection susceptibility* Updated *Table 58: TIMx characteristics* Updated *Section 7.4: WLCSP100 - 0.4 mm pitch wafer level chip scale package information* Added *Table 69: Maximum ADC RAIN* Added *Table 70: ADC accuracy - limited test conditions, 100-pin packages* Updated *Table 64: ADC accuracy - limited test conditions 2)* Updated *Table 75: DAC characteristics* Updated *Table 77: Operational amplifier characteristics* Updated figures and tables in *Section 7: Package information*

Table 88. Document revision history (continued)

Date	Revision	Changes
08-Jan-2013	5	Updated V_{hys} and I_{lkg} in *Table 54: I/O static characteristics*. Updated $V_{IL(NRST)}$, $V_{IH(NRST)}$, and $V_{NF(NRST)}$ in *Table 57: NRST pin characteristics*. Updated *Table 70: ADC accuracy - limited test conditions, 100-pin packages* and *Table 64: ADC accuracy - limited test conditions 2)*.
24-Jun-2013	6	Replaced Cortex-M4F with Cortex M4 with FPU Updated Core, Memories and SPI bullet points in *Features* Removed 8KB CCM SRAM from STM32F302xx devices, updated *Figure 2: STM32F303xB/STM32F303xC block diagram* and *Table 3: STM32F303xx family device features and peripheral counts* Updated *Section 3.4: Embedded SRAM* Added VREF+ in *Section 3.14: Digital-to-analog converter (DAC)* Removed DMA support for UART5 in *Table 11: USART features* Added 'reference clock detection' bullet in *Section 3.18: Real-time clock (RTC) and backup registers* Added paragraph 'The touch sensing controller is fully...' in *Section 3.26: Touch sensing controller (TSC)* Updated *Comparison of I2C analog and digital filters* Updated *Section 3.10: General-purpose input/outputs (GPIOs)* Added 'EVENTOUT' in *Table 16: STM32F302xB/STM32F302xC pin definitions* and added note to 'VREF+' pin Updated ΣI_{VDD} in *Table 22: Current characteristics* and *Output driving current* Updated *Table 61: I2C timings specification (see I2C specification, rev.03, June 2007)* and *Figure 25: I^2C bus AC waveforms and measurement circuit* Added VREF+ row to *Table 68: ADC characteristics*, replaced VDDA with VREF+, updated t_{conv} and added note to 'conversion voltage range Added VREF+ row to *Table 75: DAC characteristics* and replaced VDDA with VREF+ Added 'PGA BW' and 'en' in *Table 77: Operational amplifier characteristics*
13-Nov-2013	7	Removed STM32F302xB/STM32F302xC products (now in a separate datasheet). Added I2S feature for SPI2 and SPI3 Added t_{SP} to *Table 61: I2C timings specification (see I2C specification, rev.03, June 2007)*. Renamed t_{SP} to t_{AN} in*Table 62: I2C analog filter characteristics*. Added t_{STAB} in *Table 68: ADC characteristics* Renamed V_{OPAMPx} to $_{VREFOPAMPx}$ Updated *Table 71: ADC accuracy, 100-pin packages*. Updated ADC channel names in *Section 3.13.1*, *Section 3.13.2* and *Section 3.13.3*.

Table 88. Document revision history (continued)

Date	Revision	Changes
18-Apr-2014	8	Updated *Table 50: EMI characteristics* conditions :3.3v replaced by 3.6V. Updated *Section 6.3.17: Communications interfaces* I^2C interface. Updated *Table 77: Operational amplifier characteristics* adding TS_OPAMP_VOUT row. Updated *Section 3.13: Fast analog-to-digital converter (ADC)*. updated Arm and Cortex trademark. Updated *Table 32: Typical and maximum V_{DD} consumption in Stop and Standby modes* with Max value at 85°C and 105°C. Updated *Table 70: ADC accuracy - limited test conditions, 100-pin packages* and *Table 71: ADC accuracy, 100-pin packages* for 100-pin package. Added *Table 72: ADC accuracy - limited test conditions, 64-pin packages* and *Table 73: ADC accuracy, 64-pin packages*for 64-pin package. Added *Table 74: ADC accuracy at 1MSPS* for 1MSPS sampling frequency. Updated *Table 63: SPI characteristics*. Updated *Table 75: DAC characteristics*.
09-Dec-2014	9	Updated core description in cover page. Updated HSI characteristics *Table 44: HSI oscillator characteristics* and *Figure 18: HSI oscillator accuracy characterization results for soldered parts*. Updated *Table 58: TIMx characteristics*. Updated *Table 16: STM32F302xB/STM32F302xC pin definitions* adding note for I/Os featuring an analog output function (DAC_OUT,OPAMP_OUT). Updated *Table 68: ADC characteristics* adding IDDA & IREF consumptions. Added *Figure 32: ADC typical current consumption on VDDA pin* and *Figure 33: ADC typical current consumption on VREF+ pin*. Added *Section 3.8: Interconnect matrix*. Updated *Figure 5: Clock tree*. Added note after *Table 32: Typical and maximum V_{DD} consumption in Stop and Standby modes*. Updated *Section : In order to meet environmental requirements, ST offers these devices in different grades of ECOPACK® packages, depending on their level of environmental compliance. ECOPACK® specifications, grade definitions and product status are available at: www.st.com. ECOPACK® is an ST trademark.* with new LQFP100, LQFP64, LQFP48 package marking. Updated *Table 16: STM32F302xB/STM32F302xC pin definitions* and alternate functions tables replacing usart_rts by usart_rts_de.
29-Jan-2015	10	Updated *Section 6.3.20: Comparator characteristics* modifying ts_sc characteristics in *Table 76* and adding *Figure 37: Maximum VREFINT scaler startup time from power down*. Updated I_{DD} data in *Table 42: HSE oscillator characteristics*.

Table 88. Document revision history (continued)

Date	Revision	Changes
17-Apr-2015	11	Updated *Section 7: Package information*: with new package information structure adding 1 sub paragraph for each package. Updated *Figure 41: LQFP100 – 14 x 14 mm, low-profile quad flat package top view example* removing gate mark. Added note for all packages about the device marking orientation: “the following figure gives an example of topside marking orientation versus pin 1 identifier location”. Updated *Table 82: LQFP64 – 10 x 10 mm, low-profile quad flat package mechanical data*.
11-Dec-2015	12	Added WLCSP100: – Updated cover page. – Updated *Table 2: STM32F303xB/STM32F303xC family device features and peripheral counts*. – Added *Figure 7: STM32F303xB/STM32F303xC WLCSP100 pinout*. – Updated *Table 13: STM32F303xB/STM32F303xC pin definitions*. – Updated *Table 24: General operating conditions*. – Added *Section 7.4: WLCSP100 - 0.4 mm pitch wafer level chip scale package information*. – Updated *Table 86: Package thermal characteristics*. – Updated *Table 87: Ordering information scheme*. Updated *Figure 4*, *Figure 5*, *Figure 6*, *Table 13* and *Table 22* removing all VDD and VSS indexes. Updated all the notes removing ‘not tested in production’. Updated *Table 68: ADC characteristics* adding V_{REF-} negative voltage reference. Update *Table 21: Voltage characteristics* adding table note 4.

Table 88. Document revision history (continued)

Date	Revision	Changes
06-May-2016	13	Updated *Table 43: LSE oscillator characteristics (f_{LSE} = 32.768 kHz)* LSEDRV[1:0] bits. Updated *Table 28: Embedded internal reference voltage* V_{REFINT} internal reference voltage (min and typ values). Updated *Figure 5: STM32F303xB/STM32F303xC LQFP64 pinout* replacing VSS by PF4. Updated *Table 51: ESD absolute maximum ratings* ESD CDM at class 3 and 4 including WLCSP100 package information. Updated *Table 13: STM32F303xB/STM32F303xC pin definitions*: – Adding ‘digital power supply’ in the Pin function column at the line corresponding to K8/28/19 pins. – Adding VSS digital ground line with WLCSP100 K9 and K10 pins connected. – Replacing in VDD line for WLCSP100: ‘A10, B10’ by ‘A9, A10, B10, B8’. Updated *Figure 21: Five volt tolerant (FT and FTf) I/O input characteristics - CMOS port*. Updated *Table 77: Operational amplifier characteristics* high saturation and low saturation voltages. Updated *Table 13: STM32F303xB/STM32F303xC pin definitions* adding note ‘Fast ADC channel’ for ADCx_IN1..5. Updated *Table 75: DAC characteristics* resistive load. Updated *Table 68: ADC characteristics* adding CMIR parameter and modifying tSTAB parameter characteristics.
30-Oct-2018	14	Updated *Table 51: ESD absolute maximum ratings* ESD class. Updated cover on 2 pages. Updated *Section 1: Introduction* with Arm logo. Updated *Section 7: Package information* adding information: – Other optional marking or inset/upset marks. – The printed markings may differ depending on the supply chain. – Updated note 1 below all the package device marking figures.

IMPORTANT NOTICE – PLEASE READ CAREFULLY

STMicroelectronics NV and its subsidiaries (“ST”) reserve the right to make changes, corrections, enhancements, modifications, and improvements to ST products and/or to this document at any time without notice. Purchasers should obtain the latest relevant information on ST products before placing orders. ST products are sold pursuant to ST’s terms and conditions of sale in place at the time of order acknowledgement.

Purchasers are solely responsible for the choice, selection, and use of ST products and ST assumes no liability for application assistance or the design of Purchasers’ products.

No license, express or implied, to any intellectual property right is granted by ST herein.

Resale of ST products with provisions different from the information set forth herein shall void any warranty granted by ST for such product.

ST and the ST logo are trademarks of ST. All other product or service names are the property of their respective owners.

Information in this document supersedes and replaces information previously supplied in any prior versions of this document.

© 2018 STMicroelectronics – All rights reserved