Apacer

The Most **Reliable** Storage For Industries

Industrial CF6 (SLC)

sales@prom-elec.com / ООО ПРОМЭЛЕКТРОНИКА

Apacer

Industrial CF6 (SLC)

Overview

Apacer industrial CF6 card is compliant with the CFA 6.0 specifications. Apacer adopts the standard 50-pin connector and SLC chip featuring industry-level stability for the card. It is available in capacities from 512MB to 64GB. The data transfer mode is up to PIO-6, Multi-Word DMA-4 and Ultra DMA-7, with the sequential read/write speed reaching as fast as 110/80 MB/sec. To help data stay correct, this CF6 memory card also supports 72-bit ECC function, wear-leveling function and S.M.A.R.T. (Self-Monitoring, Analysis, and Reporting Technology), thereby substantially enhancing product reliability.

*The actual available memory on the device is less than what is listed on the package. This is due to small discrepancies in file formats and algorithms used by various operating systems. In addition, a portion of memory space is reserved for system files and data sectors for better performance.

Feature

·Compliant with CFA 6.0 specifications

· Lock switch design for write-protection

· Built-in ATA Secure Erase and S.M.A.R.T. Functions

· Advanced wear-leveling and Block Management

· Power Failure Management

· Write-protection

· Wide Temp.

Apacer

Specifications

Model	Industrial CF6 (SLC)
Interface	PC Card Memory Mode; PC Card I/O Mode; True IDE Mode
Connector	50-pin
Form Factor	CompactFlash Type I
Transfer Mode	PIO Mode-6, MWDMA Mode-4, UDMA Mode-7
NAND Flash Type	SLC
Capacity	512MB~64GB
Sustained Read Performance (MB/sec)	Up to 110
Sustained Write Performance (MB/sec)	Up to 80
ECC Engine	Built-in 72-bit per 1K bytes BCH ECC
Standard Operating Temperature (°C)	0 ~ + 70
Extended Operating Temperature (°C)	-40 ~ + 85
Storage Temperature (°C)	-40 ~ + 100
H/W Write Protect	Yes
Shock	Operation: 50G, 11ms Non-operation: 1500G, 0.5ms
Vibration	Operation: 7.69 Grms, 20~2000 Hz/random (compliant with MIL-STD-810G) Non-operation: 15 G, 10 ~ 2000 Hz/sine
Operating Voltage	3.3 V / 5.0 V ± 5%
Power Consumption	Active mode: 310 mA, Standby mode: 5 mA
Dimension (L x W x H)	36.4mm x 42.8mm x 3.3mm
MTBF (hours)	>2,000,000

Apacer

Mechanical Specification

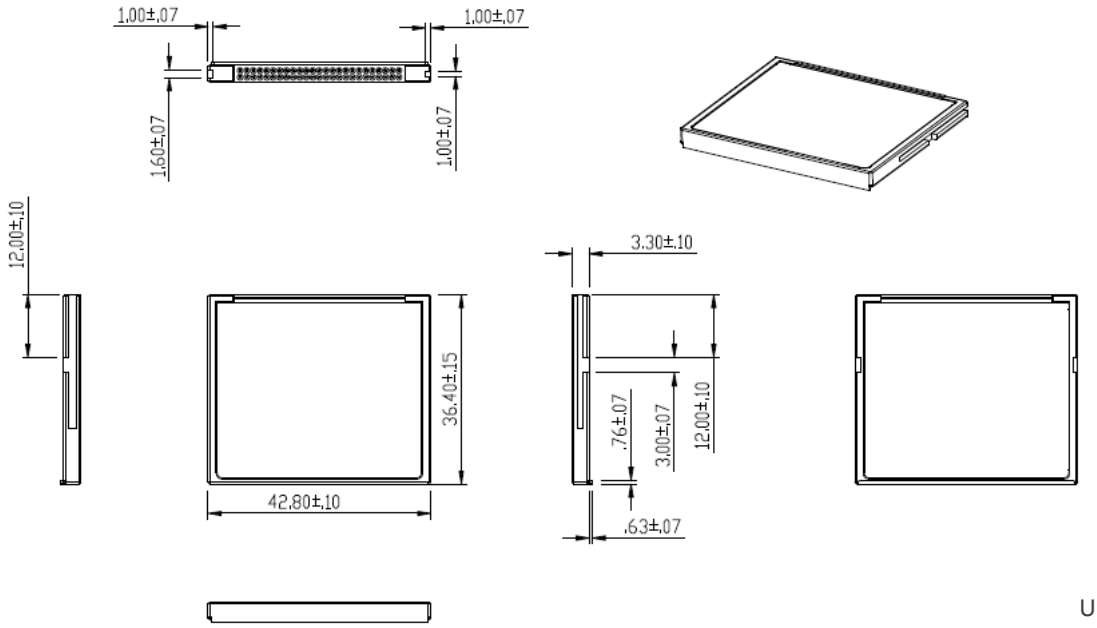

Unit: mm

For more information, contact your Apacer representative

Global Presence

Taiwan (Headquarters)
Apacer Technology Inc.
Tel: +886-2-2267-8000
Fax: +886-2-2267-2261

Europe
Apacer Technology B.V.
Tel: +31-40-267-0000
Fax: +31-40-290-0686

U.S.A.
Apacer Memory America, Inc.
Tel: +1-408-518-8699
Fax: 1-510-249-9551

China
Apacer Electronic(Shanghai) Co., Ltd.
Tel: +86-21-6228-9939

Japan
Apacer Technology Corp.
Tel: +81-3-5419-2668
Fax: +81-3-5419-0018

India
Apacer Technologies Pvt. Ltd.
Tel: +91-80-41529061~3
Fax: +91-80-41700215