# MAGNETIC TRANSDUCER

| | |
|---|---|
| Customer | |
| Customer P/O | |
| Bestar Model Name | BMT-1212UX |
| Product No. | 020201 |
| Issue No. | BS/TET01.071A |
| Issue Date | 01/05/28 |

Approval:

1.Characteristic
2.Drawing
3.Reliability Test
4.Packing

Bestar Acoustic
BESTAR ELECTRONICS INDUSTRY CO.,LTD
TianAn Industry Park4/F,Site B ChangZhou New District
Tel:86-519-5103228
Fax:86-519-5131010
Http:www.be-star.com
E-Mail:bestarco@pub.cz.jsinfo.net

sales@prom-elec.com / ООО ПРОМЭЛЕКТРОНИКА

# BMT-1212UX

## 1. Characteristic

Electrical and Mechanical Characteristics

| No. | Item | Specification |
|---|---|---|
| 1. | Operating Voltage(V) | 9~15 |
| 2. | Rated Voltage(V) | 12 |
| 3. | a)Sound Output at 10cm(dB) | min.83 |
| 4. | a)Rated Current(mA) | max.30 |
| 5. | a)Resonance Frequency (Hz) | 2300± 400 |
| 6. | Operating Temperature(° C) | -20...+70 |
| 7. | Storage Temperature (° C) | -25...+80 |
| | a)Value Appling at Rated Voltage | |

Standard Output Measurenent Setup

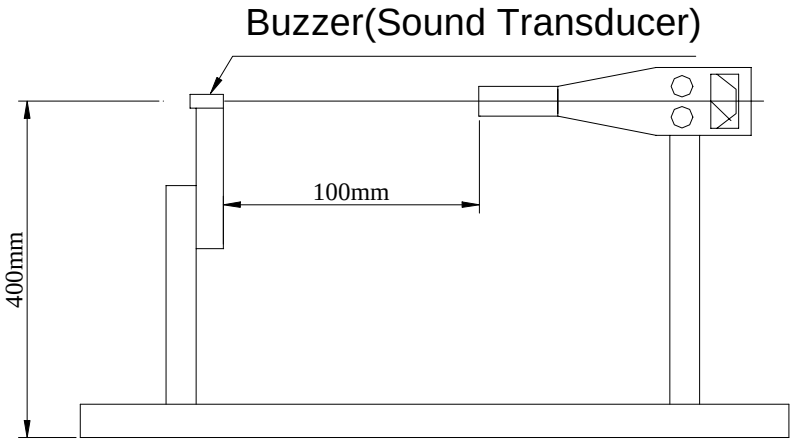


This print and information therein are proprietary to Bestar Electronics Industry Co., Ltd. and shall not be used in whole or in part without its written content 020201

| | | | | | |
|---|---|---|---|---|---|
| DIS . | | DATE | | Page:1 of 4 | BMT-1212UX |
| CHEC. | | DATE | | 3rd angle projection | Transducer |
| APPR. | | DATE | | | |

BESTAR ELECTRONICS INDUSTRY CO.,LTD
TianAn Industry Park 4/F,Site B ChangZhou New District
E-Mail:bestarco@ pub.cz.jsinfo.net Http:www.be-star.com

DRG NO
BS/TET01.071A

# BMT-1212UX

## 2. Drawing

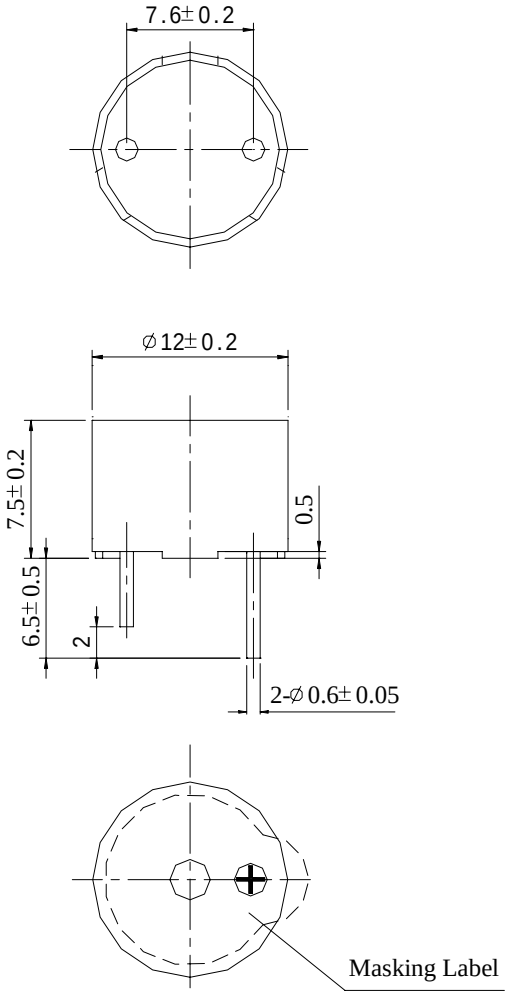


This print and information therein are proprietary to Bestar Electronics Industry Co., Ltd. and shall not be used in whole or in part without its written content 020201

| | | | | | |
|---|---|---|---|---|---|
| DIS. | | DATE | | Page:2 of 4 | BMT-1212UX |
| CHEC. | | DATE | | 3rd angle projection | Transducer |
| APPR. | | DATE | | | DRG NO BS/TET01.071A |

BESTAR ELECTRONICS INDUSTRY CO.,LTD
TianAn Industry Park 4/F,Site B ChangZhou New District
E-Mail:bestarco@ pub.cz.jsinfo.net Http:www.be-star.com

# BMT-1212UX

## 3. Reliability test

3.1 High temperature test

| | |
|---|---|
| Temperature | +80° C |
| Duration | 96hrs |

3.2 Low temperature test

| | |
|---|---|
| Temperature | -25° C |
| Duration | 96hrs |

3.3 Temperature cycle test

| | |
|---|---|
| Cycles | 5 |

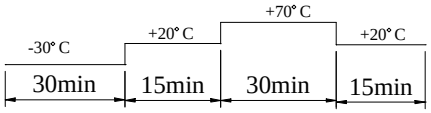


3.4 Humidity cycle test

| | |
|---|---|
| Cycles | 10 |

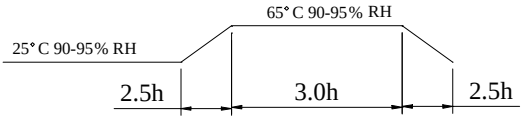


all these tests above should be measured after leaving normal temperature for 2hrs.

3.5 Load test

| | |
|---|---|
| Power supply | rated voltage |
| Duration | 1000hrs |

3.6 Vibration Test

| | |
|---|---|
| Vibration Frequency | 10~55Hz |
| Amplitude | 1.5mm |
| Duration x,y&z directions | 30min |

3.7 Drop test

| | |
|---|---|
| Height (to 10mm thickness woodenboard) | 70cm |
| Direction | 3 |

3.8 Solderability test

| | |
|---|---|
| Solderability temperature | 255° C |
| Heat applying time | 3sec |

Notice: After the test the part shall meet specifications without any degrance and performance except S.P.L, S.P.L shall be 80dB more .

This print and information therein are proprietary to Bestar Electronics Industry Co., Ltd. and shall not be used in whole or in part without its written content 020201

| | | | | | |
|---|---|---|---|---|---|
| DIS. | | DATE | | Page:3 of 4 | BMT-1212UX |
| CHEC. | | DATE | | 3rd angle projection | Transducer |
| APPR. | | DATE | | | DRG NO BS/TET01.071A |

BESTAR ELECTRONICS INDUSTRY CO.,LTD
TianAn Industry Park 4/F,Site B ChangZhou New District
E-Mail:bestarco@ pub.cz.jsinfo.net Http:www.be-star.com

# BMT-1212UX

## 4. Packing

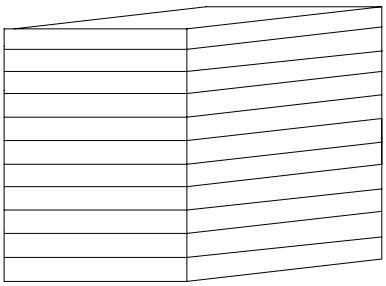

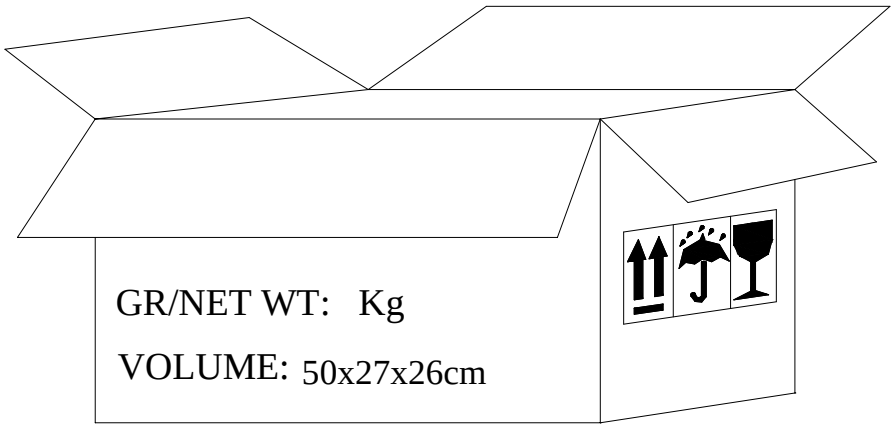


1)100pcs/tray
2)30tray/carton
3)3000 pcs/carton in total
4)carton size 50x27x26cm

This print and information there in are proprietary to Bestar Electronics Industry Co., Ltd. and shall not be used in whole or in part without its written content №020201

| | | | | | |
|---|---|---|---|---|---|
| DIS. | | DATE | | Page:4 of 4 | BMT-1212UX |
| CHEC. | | DATE | | 3rd angle projection | |
| APPR. | | DATE | | | Transducer |

BESTAR ELECTRONICS INDUSTRY CO.,LTD
TianAn Industry Park 4/F,Site B ChangZhou New District
E-Mail:bestarco@ pub.cz.jsinfo.net Http:www.be-star.com

DRG NO BS/TET01.071A