Low I_Q Synchronous Step-Down Controller

FEATURES

- **Wide Output Voltage Range: 0.8V ≤ V_{OUT} ≤ 10V**
- **Low Operating Quiescent Current: 80µA**
- **OPTI-LOOP® Compensation Minimizes C_{OUT}**
- **±1% Output Voltage Accuracy**
- **Wide V_{IN} Range: 4V to 36V Operation**
- **Phase-Lockable Fixed Frequency 140kHz to 650kHz**
- Dual N-Channel MOSFET Synchronous Drive
- Very Low Dropout Operation: 99% Duty Cycle
- Adjustable Output Voltage Soft-Start or Tracking
- Output Current Foldback Limiting
- Power Good Output Voltage Monitor
- Clock Output for PolyPhase® Applications
- Output Overvoltage Protection
- Low Shutdown I_Q: 10µA
- Internal LDO Powers Gate Drive from V_{IN} or V_{OUT}
- Selectable Continuous, Pulse-Skipping or Burst Mode® Operation at Light Loads
- Small 20-Lead TSSOP or 4mm × 5mm QFN Package

APPLICATIONS

- Automotive Systems
- Telecom Systems
- Battery-Operated Digital Devices
- Distributed DC Power Systems

DESCRIPTION

The LTC®3835 is a high performance step-down switching regulator controller that drives an all N-channel synchronous power MOSFET stage. A constant-frequency current mode architecture allows a phase-lockable frequency of up to 650kHz.

The 80µA no-load quiescent current extends operating life in battery powered systems. OPTI-LOOP compensation allows the transient response to be optimized over a wide range of output capacitance and ESR values. The LTC3835 features a precision 0.8V reference and a power good output indicator. The 4V to 36V input supply range encompasses a wide range of battery chemistries.

The TRACK/SS pin ramps the output voltage during start-up. Current foldback limits MOSFET heat dissipation during short-circuit conditions.

Comparison of LTC3835 and LTC3835-1

PART #	CLKOUT/ PHASMD	$EXTV_{CC}$	PGOOD	PACKAGES
LTC3835	YES	YES	YES	FE20/4 × 5 QFN
LTC3835-1	NO	NO	NO	GN16/3 × 5 DFN

, LT, LTC, LTM, Burst Mode, PolyPhase, OPTI-LOOP, Linear Technology and the Linear logo are registered trademarks and No R_{SENSE} is a trademark of Linear Technology Corporation. All other trademarks are the property of their respective owners. Protected by U.S. Patents including 5408150, 5481178, 5705919, 5929620, 6304066, 6498466, 6580258, 6611131.

TYPICAL APPLICATION

High Efficiency Synchronous Step-Down Converter

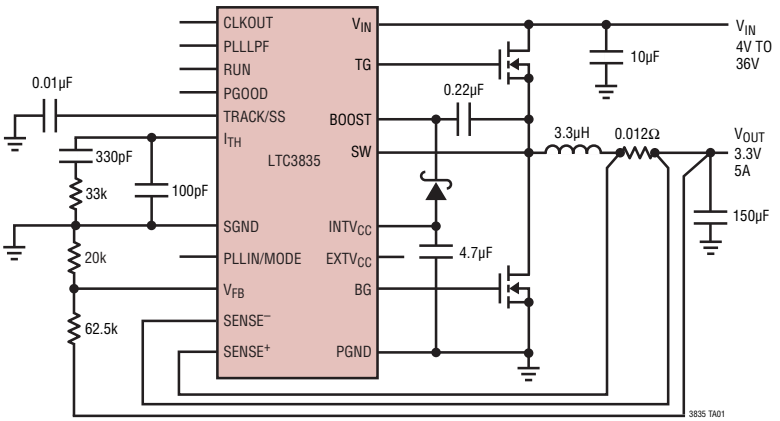

Efficiency and Power Loss vs Load Current

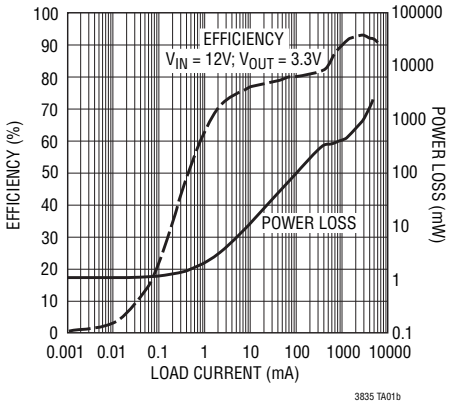

sales@prom-elec.com / ООО ПРОМЭЛЕКТРОНИКА

ABSOLUTE MAXIMUM RATINGS (Note 1)

Input Supply Voltage (V_{IN}) ..... 36V to –0.3V
Top Side Driver Voltage (BOOST)..... 42V to –0.3V
Switch Voltage (SW) ..... 36V to –5V
$INTV_{CC}$, (BOOST-SW), CLKOUT, PGOOD ... 8.5V to –0.3V
RUN, TRACK/SS ..... 7V to –0.3V
$SENSE^+$, $SENSE^-$ Voltages ..... 11V to –0.3V
PLLIN/MODE, PHASMD, PLLLPF ..... $INTV_{CC}$ to –0.3V
$EXTV_{CC}$ ..... 10V to –0.3V
I_{TH}, V_{FB} Voltages ..... 2.7V to –0.3V
Peak Output Current <10µs (TG,BG) 3A
$INTV_{CC}$ Peak Output Current 50mA
Operating Temperature Range (Note 2).... –40°C to 85°C
Junction Temperature (Note 3) ..... 125°C
Storage Temperature Range
FE Package ..... –65°C to 150°C
Storage Temperature Range
UFD Package ..... –65°C to 125°C
Lead Temperature (FE Package, Soldering, 10 sec)... 300°C

PIN CONFIGURATION

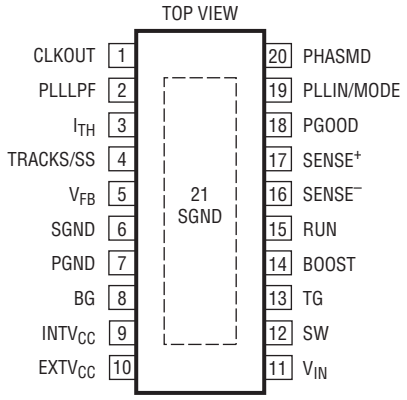

FE PACKAGE
20-LEAD PLASTIC TSSOP

T_{JMAX} = 125°C, θ_{JA} = 35°C/W
EXPOSED PAD (PIN 21) IS SGND MUST BE SOLDERED TO PCB

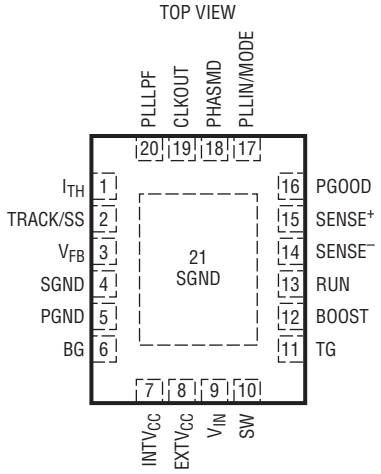

UFD PACKAGE
20-PIN (4mm × 5mm) PLASTIC QFN

T_{JMAX} = 125°C, θ_{JA} = 37°C/W
EXPOSED PAD (PIN 21) IS SGND MUST BE SOLDERED TO PCB

ORDER INFORMATION (Note 2)

LEAD FREE FINISH	TAPE AND REEL	PART MARKING*	PACKAGE DESCRIPTION	TEMPERATURE RANGE
LTC3835EFE#PBF	LTC3835EFE#TRPBF	LTC3835EFE	20-Lead Plastic TSSOP	–40°C to 85°C
LTC3835IFE#PBF	LTC3835IFE#TRPBF	LTC3835IFE	20-Lead Plastic TSSOP	–40°C to 85°C
LTC3835EUFD#PBF	LTC3835EUFD#TRPBF	3835	20-Pin (4mm × 5mm) Plastic DFN	–40°C to 85°C
LTC3835IUFD#PBF	LTC3835IUFD#TRPBF	3835	20-Pin (4mm × 5mm) Plastic DFN	–40°C to 85°C
LEAD BASED FINISH	**TAPE AND REEL**	**PART MARKING***	**PACKAGE DESCRIPTION**	**TEMPERATURE RANGE**
LTC3835EFE	LTC3835EFE#TR	LTC3835EFE	20-Lead Plastic TSSOP	–40°C to 85°C
LTC3835IFE	LTC3835IFE#TR	LTC3835IFE	20-Lead Plastic TSSOP	–40°C to 85°C
LTC3835EUFD	LTC3835EUFD#TR	3835	20-Pin (4mm × 5mm) Plastic DFN	–40°C to 85°C
LTC3835IUFD	LTC3835IUFD#TR	3835	20-Pin (4mm × 5mm) Plastic DFN	–40°C to 85°C

Consult LTC Marketing for parts specified with wider operating temperature ranges. *The temperature grade is identified by a label on the shipping container.

For more information on lead free part marking, go to: http://www.linear.com/leadfree/
For more information on tape and reel specifications, go to: http://www.linear.com/tapeandreel/

ELECTRICAL CHARACTERISTICS

The ● denotes the specifications which apply over the full operating temperature range, otherwise specifications are at T_A = 25°C. V_{IN} = 12V, V_{RUN} = 5V unless otherwise noted.

SYMBOL	PARAMETER	CONDITIONS		MIN	TYP	MAX	UNITS
Main Control Loops							
V_{FB}	Regulated Feedback Voltage	(Note 4); I_{TH} Voltage = 1.2V	●	0.792	0.800	0.808	V
I_{VFB}	Feedback Current	(Note 4)			–5	–50	nA
$V_{REFLNREG}$	Reference Voltage Line Regulation	V_{IN} = 4V to 30V (Note 4)			0.002	0.02	%/V
$V_{LOADREG}$	Output Voltage Load Regulation	(Note 4) Measured in Servo Loop; ΔI_{TH} Voltage = 1.2V to 0.7V Measured in Servo Loop; ΔI_{TH} Voltage = 1.2V to 2V	 ● ●		 0.1 –0.1	 0.5 –0.5	 % %
g_m	Transconductance Amplifier g_m	I_{TH} = 1.2V; Sink/Source 5µA (Note 4)			1.55		mmho
I_Q	Input DC Supply Current Sleep Mode Shutdown	(Note 5) RUN = 5V, V_{FB} = 0.83V (No Load) V_{RUN} = 0V			 80 10	 125 20	 µA µA
UVLO	Undervoltage Lockout	V_{IN} Ramping Down	●		3.5	4	V
V_{OVL}	Feedback Overvoltage Lockout	Measured at V_{FB} Relative to Regulated V_{FB}		8	10	12	%
I_{SENSE}	Sense Pins Total Source Current	V_{SENSE}– = V_{SENSE}+ = 0V			–660		µA
DF_{MAX}	Maximum Duty Factor	In Dropout		98	99.4		%
$I_{TRACK/SS}$	Soft-Start Charge Current	V_{TRACK} = 0V		0.75	1.0	1.35	µA
V_{RUN} ON	RUN Pin ON Threshold	V_{RUN} Rising		0.5	0.7	0.9	V
$V_{SENSE(MAX)}$	Maximum Current Sense Threshold	V_{FB} = 0.7V, V_{SENSE}– = 3.3V V_{FB} = 0.7V, V_{SENSE}– = 3.3V	 ●	90 80	100 100	110 115	mV mV
 TG t_r TG t_f	TG Transition Time: Rise Time Fall Time	(Note 6) C_{LOAD} = 3300pF C_{LOAD} = 3300pF			 50 50	 90 90	 ns ns
 BG t_r BG t_f	BG Transition Time: Rise Time Fall Time	(Note 6) C_{LOAD} = 3300pF C_{LOAD} = 3300pF			 40 40	 90 80	 ns ns

ELECTRICAL CHARACTERISTICS

The ● denotes the specifications which apply over the full operating temperature range, otherwise specifications are at T_A = 25°C. V_{IN} = 12V, V_{RUN} = 5V unless otherwise noted.

SYMBOL	PARAMETER	CONDITIONS		MIN	TYP	MAX	UNITS
TG/BG t_{1D}	Top Gate Off to Bottom Gate On Delay Synchronous Switch-On Delay Time	C_{LOAD} = 3300pF			70		ns
BG/TG t_{2D}	Bottom Gate Off to Top Gate On Delay Top Switch-On Delay Time	C_{LOAD} = 3300pF			70		ns
$t_{ON(MIN)}$	Minimum On-Time	(Note 7)			180		ns
$INTV_{CC}$ Linear Regulator							
$V_{INTVCCVIN}$	Internal V_{CC} Voltage	8.5V < V_{IN} < 30V, V_{EXTVCC} = 0V		5	5.25	5.5	V
V_{LDOVIN}	$INTV_{CC}$ Load Regulation	I_{CC} = 0mA to 20mA, V_{EXTVCC} = 0V			0.2	1.0	%
$V_{INTVCCEXT}$	Internal V_{CC} Voltage	V_{EXTVCC} = 8.5V		7.2	7.5	7.8	V
V_{LDOEXT}	$INTV_{CC}$ Load Regulation	I_{CC} = 0mA to 20mA, V_{EXTVCC} = 8.5V			0.2	1.0	%
V_{EXTVCC}	$EXTV_{CC}$ Switchover Voltage	$EXTV_{CC}$ Ramping Positive		4.5	4.7		V
V_{LDOHYS}	$EXTV_{CC}$ Hysteresis				0.2		V
Oscillator and Phase-Locked Loop							
f_{NOM}	Nominal Frequency	V_{PLLLPF} = No Connect		360	400	440	kHz
f_{LOW}	Lowest Frequency	V_{PLLLPF} = 0V		220	250	280	kHz
f_{HIGH}	Highest Frequency	V_{PLLLPF} = $INTV_{CC}$		475	530	580	kHz
$f_{SYNCMIN}$	Minimum Synchronizable Frequency	PLLIN/MODE = External Clock; V_{PLLLPF} = 0V			115	140	kHz
$f_{SYNCMAX}$	Maximum Synchronizable Frequency	PLLIN/MODE = External Clock; V_{PLLLPF} = 2V		650	800		kHz
I_{PLLLPF}	Phase Detector Output Current Sinking Capability Sourcing Capability	 $f_{PLLIN/MODE}$ < f_{OSC} $f_{PLLIN/MODE}$ > f_{OSC}			 –5 5		 µA µA
PGOOD Output							
V_{PGL}	PGOOD Voltage Low	I_{PGOOD} = 2mA			0.1	0.3	V
I_{PGOOD}	PGOOD Leakage Current	V_{PGOOD} = 5V				±1	µA
V_{PG}	PGOOD Trip Level	V_{FB} with Respect to Set Regulated Voltage V_{FB} Ramping Negative V_{FB} Ramping Positive		 –12 8	 –10 10	 –8 12	 % %

Note 1: Stresses beyond those listed under Absolute Maximum Ratings may cause permanent damage to the device. Exposure to any Absolute Maximum Rating condition for extended periods may affect device reliability and lifetime.

Note 2: The LTC3835E is guaranteed to meet performance specifications from 0°C to 85°C. Specifications over the –40°C to 85°C operating temperature range are assured by design, characterization and correlation with statistical process controls. The LTC3835I is guaranteed to meet performance specifications over the full –40°C to 85°C operating temperature range.

Note 3: T_J is calculated from the ambient temperature T_A and power dissipation P_D according to the following formulas:

LTC3835FE: $T_J = T_A + (P_D \bullet 35°C/W)$

LTC3835UFD: $T_J = T_A + (P_D \bullet 37°C/W)$

Note 4: The LTC3835 is tested in a feedback loop that servos V_{ITH} to a specified voltage and measures the resultant V_{FB}.

Note 5: Dynamic supply current is higher due to the gate charge being delivered at the switching frequency. See Applications Information.

Note 6: Rise and fall times are measured using 10% and 90% levels. Delay times are measured using 50% levels.

Note 7: The minimum on-time condition is specified for an inductor peak-to-peak ripple current ≥40% of I_{MAX} (see Minimum On-Time Considerations in the Applications Information section).

TYPICAL PERFORMANCE CHARACTERISTICS T_A = 25°C, unless otherwise noted.

Efficiency and Power Loss vs Output Current

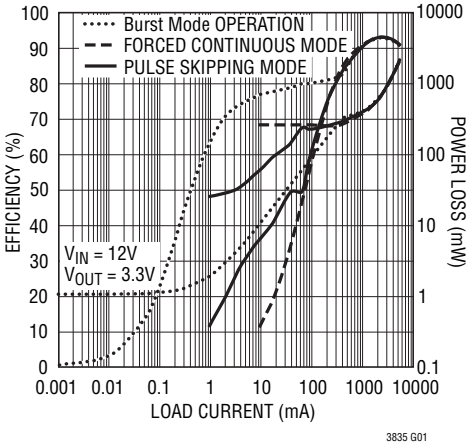

FIGURE 11 CIRCUIT

Efficiency vs Load Current

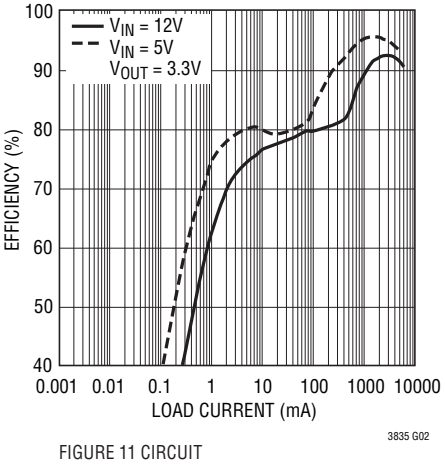

FIGURE 11 CIRCUIT

Efficiency vs Input Voltage

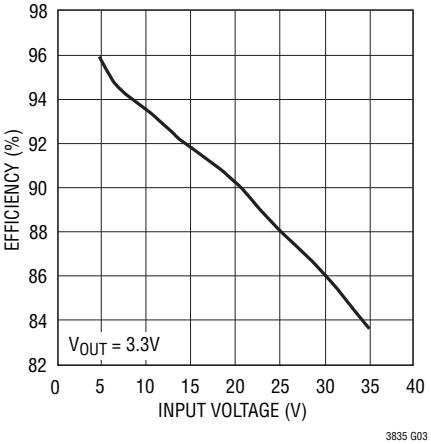

FIGURE 11 CIRCUIT

Load Step (Burst Mode Operation)

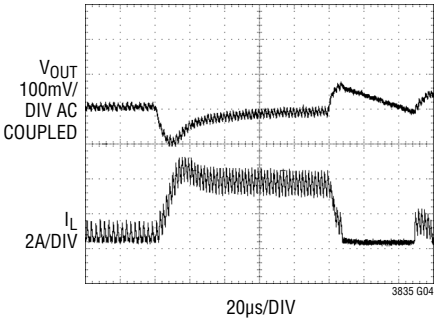

FIGURE 11 CIRCUIT
V_{OUT} = 3.3V

Load Step (Forced Continuous Mode)

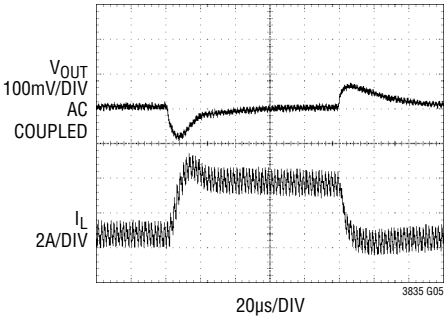

FIGURE 11 CIRCUIT
V_{OUT} = 3.3V

Load Step (Pulse-Skipping Mode)

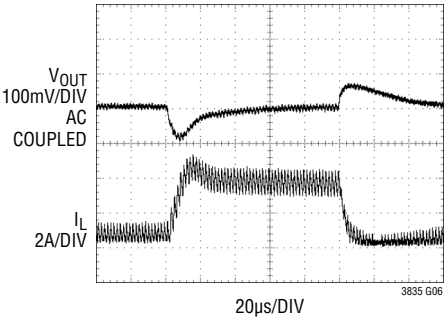

FIGURE 11 CIRCUIT
V_{OUT} = 3.3V

Inductor Current at Light Load

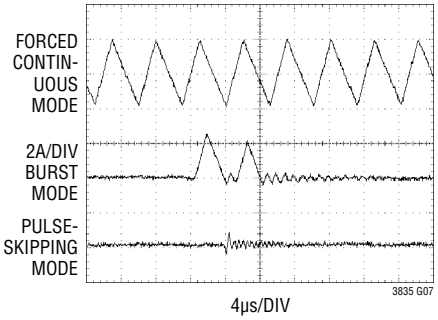

FIGURE 11 CIRCUIT
V_{OUT} = 3.3V
I_{LOAD} = 300µA

Soft Start-Up

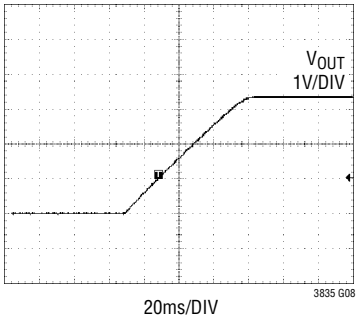

FIGURE 11 CIRCUIT

Tracking Start-Up

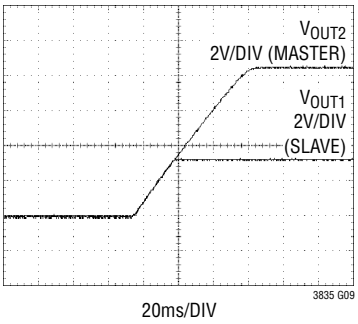

FIGURE 11 CIRCUIT

TYPICAL PERFORMANCE CHARACTERISTICS T_A = 25°C, unless otherwise noted.

Total Input Supply Current vs Input Voltage

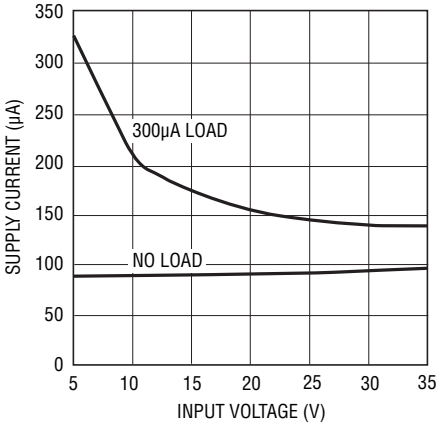

$EXTV_{CC}$ Switchover and $INTV_{CC}$ Voltages vs Temperature

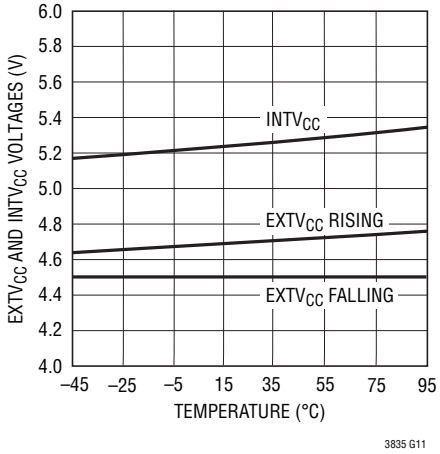

$INTV_{CC}$ Line Regulation

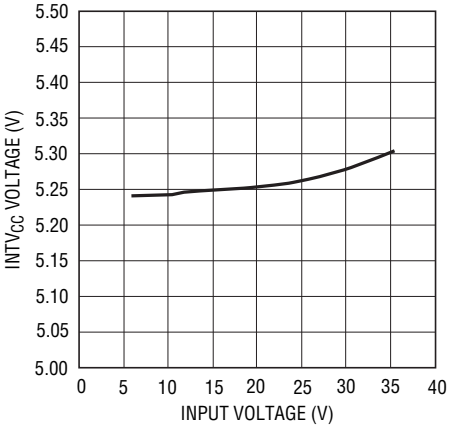

Maximum Current Sense Voltage vs I_{TH} Voltage

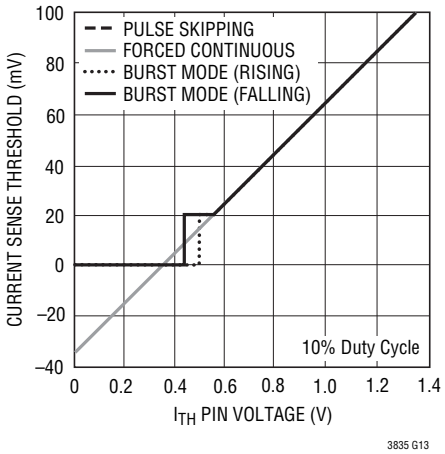

Sense Pins Total Input Bias Current

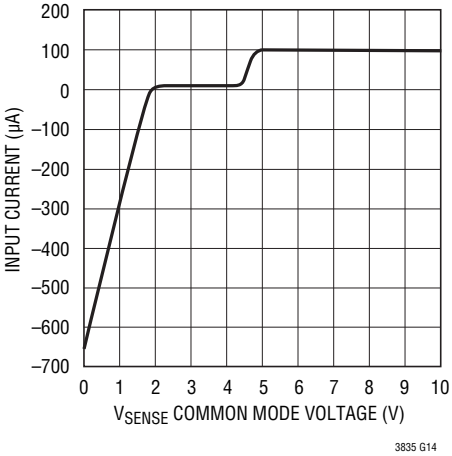

Maximum Current Sense Threshold vs Duty Cycle

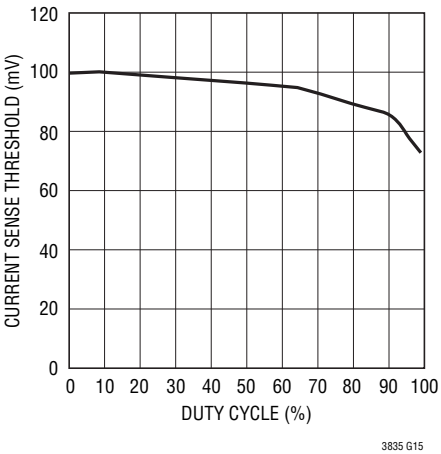

Foldback Current Limit

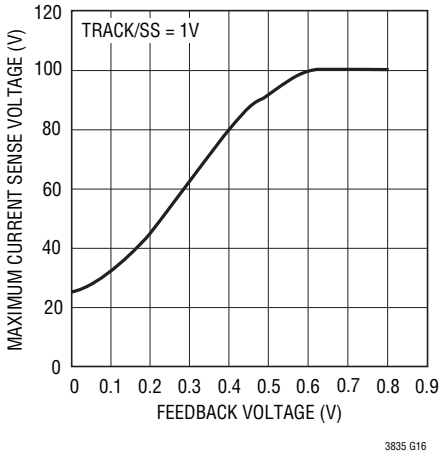

Quiescent Current vs Temperature

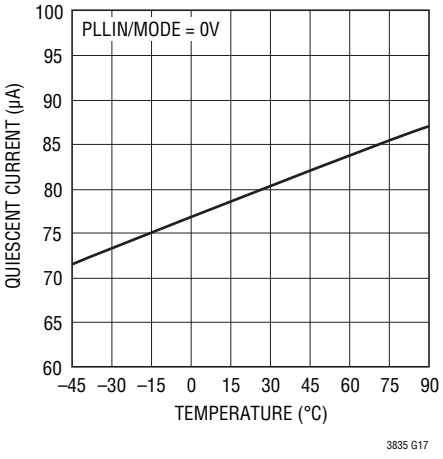

SENSE Pins Total Input Bias Current vs I_{TH}

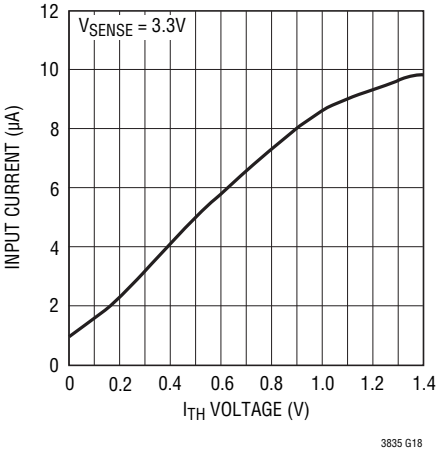

TYPICAL PERFORMANCE CHARACTERISTICS T_A = 25°C, unless otherwise noted.

TRACK/SS Pull-Up Current vs Temperature

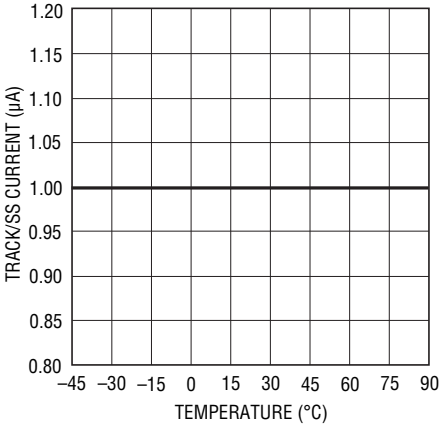

Shutdown (RUN) Threshold vs Temperature

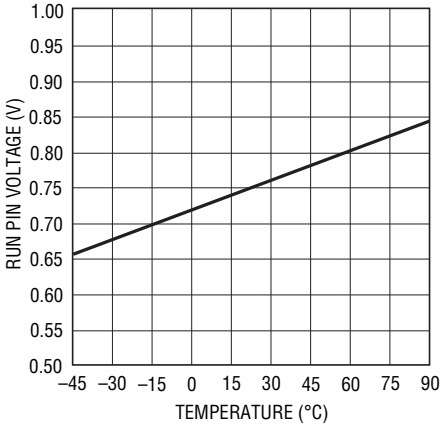

Regulated Feedback Voltage vs Temperature

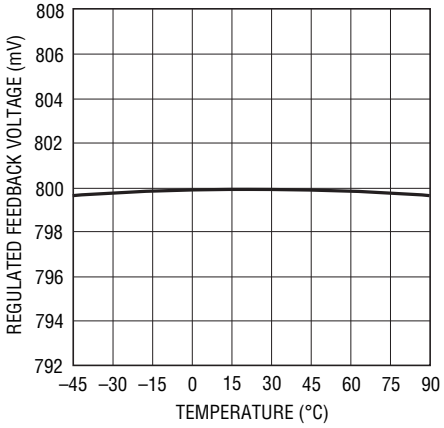

Sense Pins Total Input Current vs Temperature

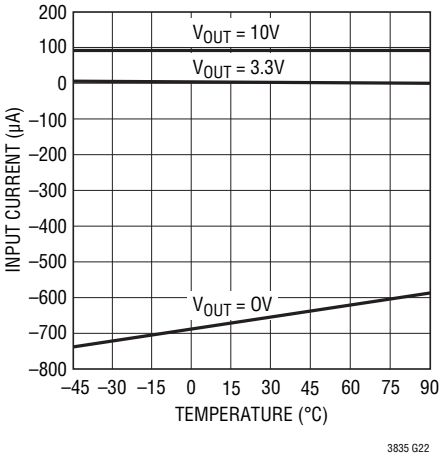

Shutdown Current vs Input Voltage

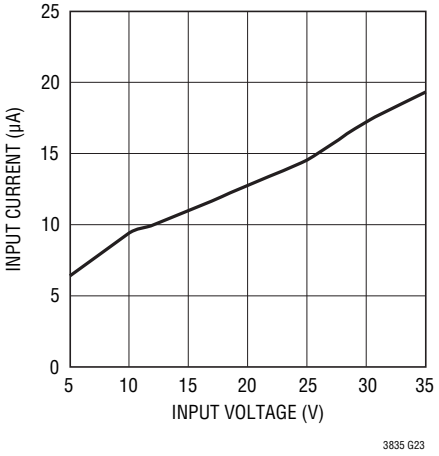

Oscillator Frequency vs Temperature

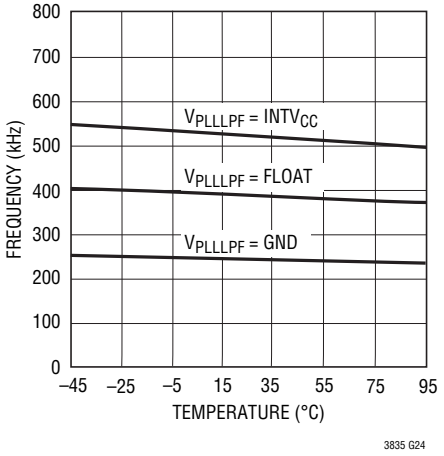

Undervoltage Lockout Threshold vs Temperature

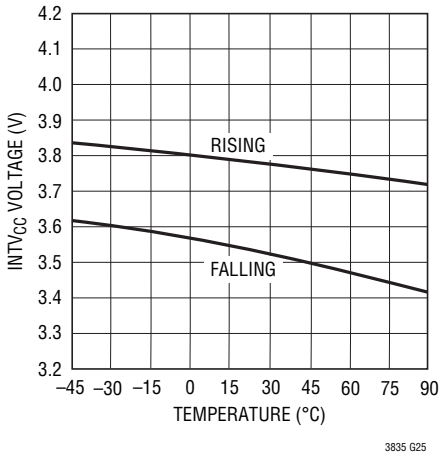

Oscillator Frequency vs Input Voltage

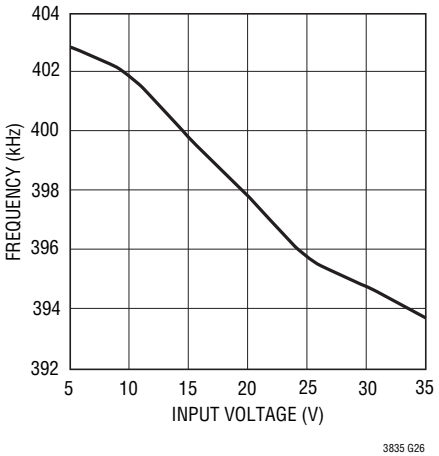

Shutdown Current vs Temperature

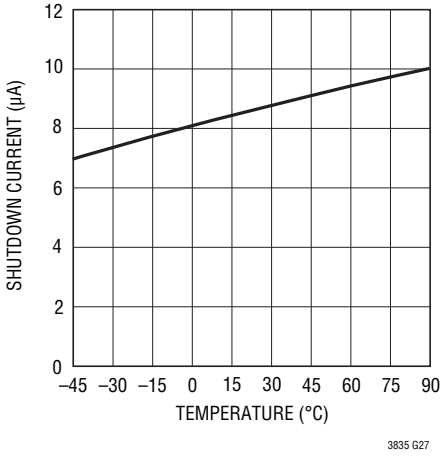

PIN FUNCTIONS (FE Package/UFD Package)

CLKOUT (Pin 1/Pin 19): Open-Drain Output Clock Signal available to daisychain other controller ICs for additional MOSFET driver stages/phases.

PLLLPF (Pin 2/Pin 20): The phase-locked loop's lowpass filter is tied to this pin when synchronizing to an external clock. Alternatively, tie this pin to GND, V_{IN} or leave floating to select 250kHz, 530kHz or 400kHz switching frequency.

I_{TH} (Pin 3/Pin 1): Error Amplifier Outputs and Switching Regulator Compensation Points. The current comparator trip point increases with this control voltage.

TRACK/SS (Pin 4/Pin 2): External Tracking and Soft-Start Input. The LTC3835 regulates the V_{FB} voltage to the smaller of 0.8V or the voltage on the TRACK/SS pin. A internal 1µA pull-up current source is connected to this pin. A capacitor to ground at this pin sets the ramp time to final regulated output voltage. Alternatively, a resistor divider on another voltage supply connected to this pin allows the LTC3835 output to track the other supply during startup.

V_{FB} (Pin 5/Pin 3): Receives the remotely sensed feedback voltage from an external resistive divider across the output.

SGND (Pin 6, Exposed Pad Pin 21/Pin 4, Exposed Pad Pin 21): Small Signal Ground. Must be routed separately from high current grounds to the common (–) terminals of the input capacitor. The exposed pad must be soldered to the PCB for electrical contact and for rated thermal performance.

PGND (Pin 7/Pin 5): Driver Power Ground. Connects to the source of bottom (synchronous) N-channel MOSFET, anode of the Schottky rectifier and the (–) terminal of C_{IN}.

BG (Pin 8/Pin 6): High Current Gate Drive for Bottom (Synchronous) N-Channel MOSFET. Voltage swing at this pin is from ground to $INTV_{CC}$.

$INTV_{CC}$ (Pin 9/Pin 7): Output of the Internal Linear Low Dropout Regulator. The driver and control circuit are powered from this voltage source. Must be decoupled to power ground with a minimum of 4.7µF tantalum or other low ESR capacitor.

$EXTV_{CC}$ (Pin 10/Pin 8): External Power Input to an Internal LDO Connected to $INTV_{CC}$. This LDO supplies V_{CC} power, bypassing the internal LDO powered from V_{IN} whenever $EXTV_{CC}$ is higher than 4.7V. See $EXTV_{CC}$ Connection in the Applications Information section. Do not exceed 10V on this pin.

V_{IN} (Pin 11/Pin 9): Main Supply Pin. A bypass capacitor should be tied between this pin and the signal ground pin.

SW (Pin 12/Pin 10): Switch Node Connections to Inductor. Voltage swing at this pin is from a Schottky diode (external) voltage drop below ground to V_{IN}.

TG (Pin 13/Pin 11): High Current Gate Drive for Top N-Channel MOSFET. These are the outputs of floating drivers with a voltage swing equal to $INTV_{CC} – 0.5V$ superimposed on the switch node voltage SW.

BOOST (Pin 14/Pin 12): Bootstrapped Supply to the Top Side Floating Driver. A capacitor is connected between the BOOST and SW pins and a Schottky diode is tied between the BOOST and $INTV_{CC}$ pins. Voltage swing at the BOOST pin is from $INTV_{CC}$ to (V_{IN} + $INTV_{CC}$).

RUN (Pin 15/Pin 13): Digital Run Control Input for Controller. Forcing this pin below 0.7V shuts down all controller functions, reducing the quiescent current that the LTC3835 draws to approximately 10µA.

SENSE– (Pin 16/Pin 14): The (–) Input to the Differential Current Comparator.

SENSE+ (Pin 17/Pin 15): The (+) Input to the Differential Current Comparator. The I_{TH} pin voltage and controlled offsets between the SENSE– and SENSE+ pins in conjunction with R_{SENSE} set the current trip threshold.

PGOOD (Pin 18/Pin 16): Open-Drain Logic Output. PGOOD is pulled to ground when the voltage on the V_{FB} pin is not within ±10% of its set point.

PLLIN/MODE (Pin 19/Pin 17): External Synchronization Input to Phase Detector and Forced Continuous Control Input. When an external clock is applied to this pin, the phase-locked loop will force the rising TG signal to be synchronized with the rising edge of the external clock. In this case, an R-C filter must be connected to the PLLLPF pin. When not synchronizing to an external clock, this input determines how the LTC3835 operates at light loads. Pulling this pin below 0.7V selects Burst Mode operation.

PIN FUNCTIONS (FE Package/UFD Package)

Tying this pin to $INTV_{CC}$ forces continuous inductor current operation. Tying this pin to a voltage greater than 0.9V and less than $INTV_{CC}$ selects pulse-skipping operation.

PHASMD (Pin 20/Pin 18): Control Input to Phase Selector which determines the phase relationships between TG and the CLKOUT signal.

FUNCTIONAL DIAGRAM

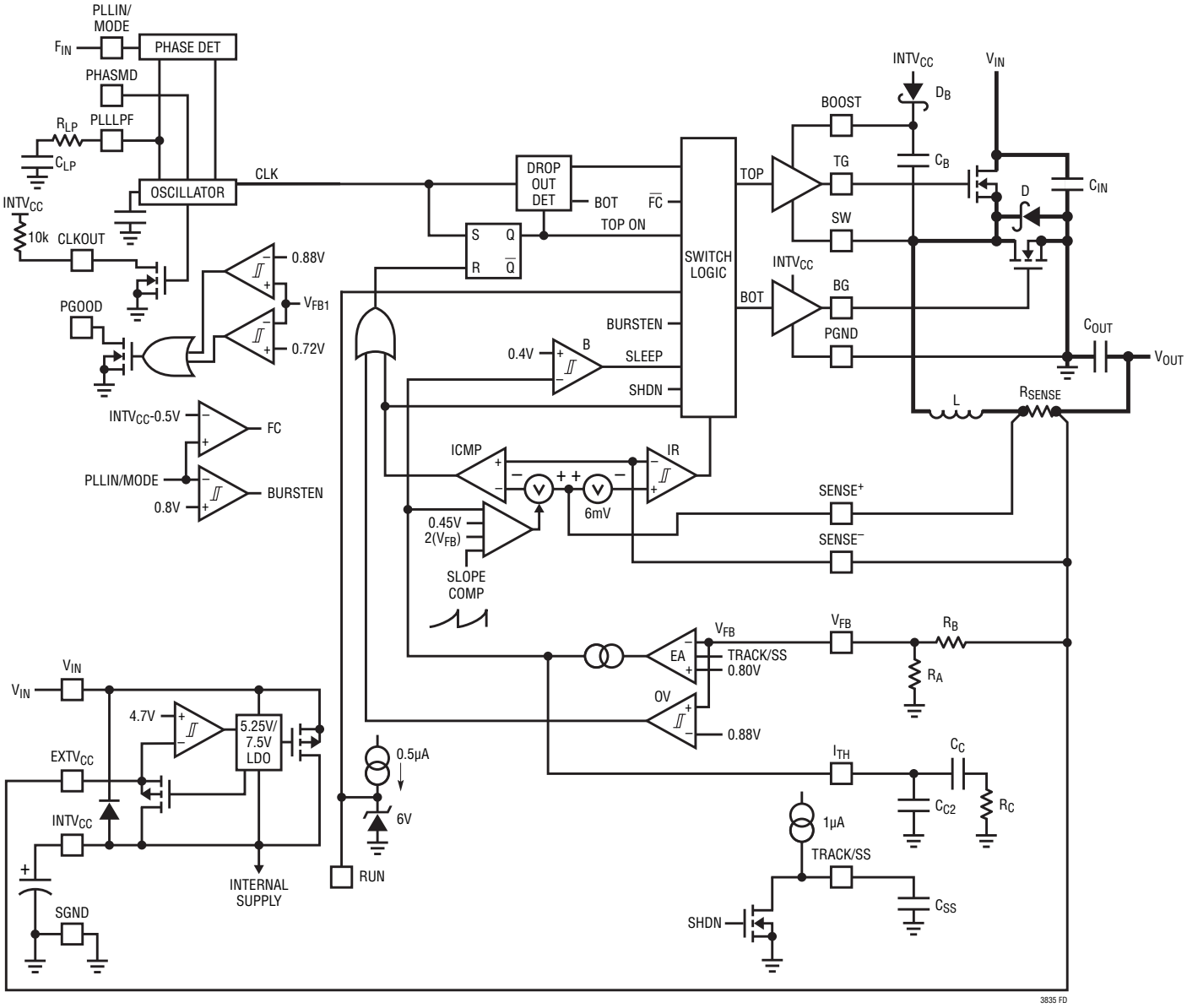

OPERATION (Refer to Functional Diagram)

Main Control Loop

The LTC3835 uses a constant-frequency, current mode step-down architecture. During normal operation, the external top MOSFET is turned on when the clock sets the RS latch, and is turned off when the main current comparator, ICMP, resets the RS latch. The peak inductor current at which ICMP trips and resets the latch is controlled by the voltage on the I_{TH} pin, which is the output of the error amplifier EA. The error amplifier compares the output voltage feedback signal at the V_{FB} pin, (which is generated with an external resistor divider connected across the output voltage, V_{OUT}, to ground) to the internal 0.800V reference voltage. When the load current increases, it causes a slight decrease in V_{FB} relative to the reference, which cause the EA to increase the I_{TH} voltage until the average inductor current matches the new load current.

After the top MOSFET is turned off each cycle, the bottom MOSFET is turned on until either the inductor current starts to reverse, as indicated by the current comparator IR, or the beginning of the next clock cycle.

$INTV_{CC}/EXTV_{CC}$ Power

Power for the top and bottom MOSFET drivers and most other internal circuitry is derived from the $INTV_{CC}$ pin. When the $EXTV_{CC}$ pin is left open or tied to a voltage less than 4.7V, an internal 5.25V low dropout linear regulator supplies $INTV_{CC}$ power from V_{IN}. If $EXTV_{CC}$ is taken above 4.7V, the 5.25V regulator is turned off and a 7.5V low dropout linear regulator is enabled that supplies $INTV_{CC}$ power from $EXTV_{CC}$. If $EXTV_{CC}$ is less than 7.5V (but greater than 4.7V), the 7.5V regulator is in dropout and $INTV_{CC}$ is approximately equal to $EXTV_{CC}$. When $EXTV_{CC}$ is greater than 7.5V (up to an absolute maximum rating of 10V), $INTV_{CC}$ is regulated to 7.5V. Using the $EXTV_{CC}$ pin allows the $INTV_{CC}$ power to be derived from a high efficiency external source such as one of the LTC3835 switching regulator outputs.

The top MOSFET driver is biased from the floating bootstrap capacitor C_B, which normally recharges during each off cycle through an external diode when the top MOSFET turns off. If the input voltage V_{IN} decreases to a voltage close to V_{OUT}, the loop may enter dropout and attempt to turn on the top MOSFET continuously. The dropout detector detects this and forces the top MOSFET off for about one twelfth of the clock period every tenth cycle to allow C_B to recharge.

Shutdown and Start-Up (RUN and TRACK/SS Pins)

The LTC3835 can be shut down using the RUN pin. Pulling this pin below 0.7V shuts down the main control loop of the controller. A low disables the controller and most internal circuits, including the $INTV_{CC}$ regulator, at which time the LTC3835 draws only 10µA of quiescent current.

Releasing the RUN pin allows an internal 0.5µA current to pull up the pin and enable that controller. Alternatively, the RUN pin may be externally pulled up or driven directly by logic. Be careful not to exceed the Absolute Maximum rating of 7V on this pin.

The start-up of the output voltage V_{OUT} is controlled by the voltage on the TRACK/SS pin. When the voltage on the TRACK/SS pin is less than the 0.8V internal reference, the LTC3835 regulates the V_{FB} voltage to the TRACK/SS pin voltage instead of the 0.8V reference. This allows the TRACK/SS pin to be used to program a soft start by connecting an external capacitor from the TRACK/SS pin to SGND. An internal 1µA pull-up current charges this capacitor creating a voltage ramp on the TRACK/SS pin. As the TRACK/SS voltage rises linearly from 0V to 0.8V (and beyond), the output voltage V_{OUT} rises smoothly from zero to its final value.

Alternatively the TRACK/SS pin can be used to cause the start-up of V_{OUT} to "track" that of another supply. Typically, this requires connecting to the TRACK/SS pin an external resistor divider from the other supply to ground (see Applications Information section).

When the RUN pin is pulled low to disable the LTC3835, or when V_{IN} drops below its undervoltage lockout threshold of 3.5V, the TRACK/SS pin is pulled low by an internal MOSFET. When in undervoltage lockout, the controller is disabled and the external MOSFETs are held off.

OPERATION (Refer to Functional Diagram)

Light Load Current Operation (Burst Mode Operation, Pulse-Skipping, or Continuous Conduction) (PLLIN/MODE Pin)

The LTC3835 can be enabled to enter high efficiency Burst Mode operation, constant-frequency pulse-skipping mode, or forced continuous conduction mode at low load currents. To select Burst Mode operation, tie the PLLIN/MODE pin to a DC voltage below 0.8V (e.g., SGND). To select forced continuous operation, tie the PLLIN/MODE pin to $INTV_{CC}$. To select pulse-skipping mode, tie the PLLIN/MODE pin to a DC voltage greater than 0.8V and less than $INTV_{CC}$ – 0.5V.

When the LTC3835 is enabled for Burst Mode operation, the peak current in the inductor is set to approximately one-tenth of the maximum sense voltage even though the voltage on the I_{TH} pin indicates a lower value. If the average inductor current is lower than the load current, the error amplifier EA will decrease the voltage on the I_{TH} pin. When the I_{TH} voltage drops below 0.4V, the internal sleep signal goes high (enabling "sleep" mode) and both external MOSFETs are turned off. The I_{TH} pin is then disconnected from the output of the EA and "parked" at 0.425V.

In sleep mode, much of the internal circuitry is turned off, reducing the quiescent current that the LTC3835 draws to only 80µA. In sleep mode, the load current is supplied by the output capacitor. As the output voltage decreases, the EA's output begins to rise. When the output voltage drops enough, the I_{TH} pin is reconnected to the output of the EA, the sleep signal goes low, and the controller resumes normal operation by turning on the top external MOSFET on the next cycle of the internal oscillator.

When the LTC3835 is enabled for Burst Mode operation, the inductor current is not allowed to reverse. The reverse current comparator (RI_{CMP}) turns off the bottom external MOSFET just before the inductor current reaches zero, preventing it from reversing and going negative, thus operating in discontinuous operation.

In forced continuous operation, the inductor current is allowed to reverse at light loads or under large transient conditions. The peak inductor current is determined by the voltage on the I_{TH} pin, just as in normal operation. In this mode, the efficiency at light loads is lower than in Burst Mode operation. However, continuous operation has the advantages of lower output ripple and less interference to audio circuitry. In forced continuous mode, the output ripple is independent of load current.

When the PLLIN/MODE pin is connected for pulse-skipping mode or clocked by an external clock source to use the phase-locked loop (see Frequency Selection and Phase-Locked Loop section), the LTC3835 operates in PWM pulse-skipping mode at light loads. In this mode, constant-frequency operation is maintained down to approximately 1% of designed maximum output current. At very light loads, the current comparator I_{CMP} may remain tripped for several cycles and force the external top MOSFET to stay off for the same number of cycles (i.e., skipping pulses). The inductor current is not allowed to reverse (discontinuous operation). This mode, like forced continuous operation, exhibits low output ripple as well as low audio noise and reduced RF interference as compared to Burst Mode operation. It provides higher low current efficiency than forced continuous mode, but not nearly as high as Burst Mode operation.

Frequency Selection and Phase-Locked Loop (PLLLPF and PLLIN/MODE Pins)

The selection of switching frequency is a tradeoff between efficiency and component size. Low frequency operation increases efficiency by reducing MOSFET switching losses, but requires larger inductance and/or capacitance to maintain low output ripple voltage.

The switching frequency of the LTC3835's controllers can be selected using the PLLLPF pin.

If the PLLIN/MODE pin is not being driven by an external clock source, the PLLLPF pin can be floated, tied to $INTV_{CC}$, or tied to SGND to select 400kHz, 530kHz, or 250kHz, respectively.

A phase-locked loop (PLL) is available on the LTC3835 to synchronize the internal oscillator to an external clock source that is connected to the PLLIN/MODE pin. In this case, a series R-C should be connected between the PLLLPF pin and SGND to serve as the PLL's loop filter. The LTC3835 phase detector adjusts the voltage on the PLLLPF pin to align the turn-on of the external top MOSFET to the rising edge of the synchronizing signal.

OPERATION (Refer to Functional Diagram)

The typical capture range of the LTC3835's phase-locked loop is from approximately 115kHz to 800kHz, with a guarantee to be between 140kHz and 650kHz. In other words, the LTC3835's PLL is guaranteed to lock to an external clock source whose frequency is between 140kHz and 650kHz.

The typical input clock thresholds on the PLLIN/MODE pin are 1.6V (rising) and 1.2V (falling).

PolyPhase Applications (CLKOUT and PHASMD Pins)

The LTC3835 features two pins (CLKOUT and PHASMD) that allow other controller ICs to be daisy-chained with the LTC3835 in PolyPhase applications. The clock output signal on the CLKOUT pin can be used to synchronize additional power stages in a multiphase power supply solution feeding a single, high current output or multiple separate outputs. The PHASMD pin is used to adjust the phase of the CLKOUT signal, as summarized in Table 1. The phases are calculated relative to the zero degrees phase being defined as the rising edge of the top gate driver output (TG).

The CLKOUT pin has an open-drain output device. Normally, a 10k to 100k resistor can be connected from this pin to a voltage supply that is less than or equal to 8.5V.

Table 1

V_{PHASMD}	CLKOUT PHASE
GND	90°
Floating	180°
$INTV_{CC}$	120°

Output Overvoltage Protection

An overvoltage comparator guards against transient overshoots as well as other more serious conditions that may overvoltage the output. When the V_{FB} pin rises to more than 10% higher than its regulation point of 0.800V, the top MOSFET is turned off and the bottom MOSFET is turned on until the overvoltage condition is cleared.

Power Good (PGOOD) Pin

The PGOOD pin is connected to an open drain of an internal N-channel MOSFET. The MOSFET turns on and pulls the PGOOD pin low when the V_{FB} pin voltage is not within ±10% of the 0.8V reference voltage. The PGOOD pin is also pulled low when the RUN pin is low (shut down). When the V_{FB} pin voltage is within the ±10% requirement, the MOSFET is turned off and the pin is allowed to be pulled up by an external resistor to a source of up to 8.5V.

APPLICATIONS INFORMATION

R_{SENSE} Selection For Output Current

R_{SENSE} is chosen based on the required output current. The current comparator has a maximum threshold of 100mV/R_{SENSE} and an input common mode range of SGND to 10V. The current comparator threshold sets the peak of the inductor current, yielding a maximum average output current I_{MAX} equal to the peak value less half the peak-to-peak ripple current, ΔI_L.

Allowing a margin for variations in the IC and external component values yields:

$$R_{SENSE} = \frac{80mV}{I_{MAX}}$$

When using the controller in very low dropout conditions, the maximum output current level will be reduced due to the internal compensation required to meet stability criterion for buck regulators operating at greater than 50% duty factor. A curve is provided to estimate this reduction in peak output current level depending upon the operating duty factor.

Operating Frequency and Synchronization

The choice of operating frequency, is a trade-off between efficiency and component size. Low frequency operation improves efficiency by reducing MOSFET switching losses, both gate charge loss and transition loss. However, lower frequency operation requires more inductance for a given amount of ripple current.

The internal oscillator of the LTC3835 runs at a nominal 400kHz frequency when the PLLLPF pin is left floating and the PLLIN/MODE pin is a DC low or high. Pulling the PLLLPF to $INTV_{CC}$ selects 530kHz operation; pulling the PLLLPF to SGND selects 250kHz operation.

Alternatively, the LTC3835 will phase-lock to a clock signal applied to the PLLIN/MODE pin with a frequency between 140kHz and 650kHz (see Phase-Locked Loop and Frequency Synchronization).

Inductor Value Calculation

The operating frequency and inductor selection are interrelated in that higher operating frequencies allow the use of smaller inductor and capacitor values. So why would anyone ever choose to operate at lower frequencies with larger components? The answer is efficiency. A higher frequency generally results in lower efficiency because of MOSFET gate charge losses. In addition to this basic trade-off, the effect of inductor value on ripple current and low current operation must also be considered.

The inductor value has a direct effect on ripple current. The inductor ripple current ΔI_L decreases with higher inductance or frequency and increases with higher V_{IN}:

$$\Delta I_L = \frac{1}{(f)(L)} V_{OUT}\left(1 - \frac{V_{OUT}}{V_{IN}}\right)$$

Accepting larger values of ΔI_L allows the use of low inductances, but results in higher output voltage ripple and greater core losses. A reasonable starting point for setting ripple current is ΔI_L=0.3(I_{MAX}). The maximum ΔI_L occurs at the maximum input voltage.

The inductor value also has secondary effects. The transition to Burst Mode operation begins when the average inductor current required results in a peak current below 10% of the current limit determined by R_{SENSE}. Lower inductor values (higher ΔI_L) will cause this to occur at lower load currents, which can cause a dip in efficiency in the upper range of low current operation. In Burst Mode operation, lower inductance values will cause the burst frequency to decrease.

Inductor Core Selection

Once the value for L is known, the type of inductor must be selected. High efficiency converters generally cannot afford the core loss found in low cost powdered iron cores, forcing the use of more expensive ferrite or molypermalloy cores. Actual core loss is independent of core size for a fixed inductor value, but it is very dependent on inductance selected. As inductance increases, core losses go down. Unfortunately, increased inductance requires more turns of wire and therefore copper losses will increase.

Ferrite designs have very low core loss and are preferred at high switching frequencies, so design goals can concentrate on copper loss and preventing saturation. Ferrite core material saturates “hard,” which means that

APPLICATIONS INFORMATION

inductance collapses abruptly when the peak design current is exceeded. This results in an abrupt increase in inductor ripple current and consequent output voltage ripple. Do not allow the core to saturate!

Power MOSFET and Schottky Diode (Optional) Selection

Two external power MOSFETs must be selected for the LTC3835: One N-channel MOSFET for the top (main) switch, and one N-channel MOSFET for the bottom (synchronous) switch.

The peak-to-peak drive levels are set by the $INTV_{CC}$ voltage. This voltage is typically 5V during start-up (see $EXTV_{CC}$ Pin Connection). Consequently, logic-level threshold MOSFETs must be used in most applications. The only exception is if low input voltage is expected (V_{IN} < 5V); then, sub-logic level threshold MOSFETs ($V_{GS(TH)}$ < 3V) should be used. Pay close attention to the BV_{DSS} specification for the MOSFETs as well; most of the logic level MOSFETs are limited to 30V or less.

Selection criteria for the power MOSFETs include the "ON" resistance $R_{DS(ON)}$, Miller capacitance C_{MILLER}, input voltage and maximum output current. Miller capacitance, C_{MILLER}, can be approximated from the gate charge curve usually provided on the MOSFET manufacturers' data sheet. C_{MILLER} is equal to the increase in gate charge along the horizontal axis while the curve is approximately flat divided by the specified change in V_{DS}. This result is then multiplied by the ratio of the application applied V_{DS} to the Gate charge curve specified V_{DS}. When the IC is operating in continuous mode the duty cycles for the top and bottom MOSFETs are given by:

$$\text{Main Switch Duty Cycle} = \frac{V_{OUT}}{V_{IN}}$$

$$\text{Synchronous Switch Duty Cycle} = \frac{V_{IN} - V_{OUT}}{V_{IN}}$$

The MOSFET power dissipations at maximum output current are given by:

$$P_{MAIN} = \frac{V_{OUT}}{V_{IN}}(I_{MAX})^2(1+\delta)R_{DS(ON)} + (V_{IN})^2\left(\frac{I_{MAX}}{2}\right)(R_{DR})(C_{MILLER})\bullet\left[\frac{1}{V_{INTVCC} - V_{THMIN}} + \frac{1}{V_{THMIN}}\right](f)$$

$$P_{SYNC} = \frac{V_{IN} - V_{OUT}}{V_{IN}}(I_{MAX})^2(1+\delta)R_{DS(ON)}$$

where δ is the temperature dependency of $R_{DS(ON)}$ and R_{DR} (approximately 2Ω) is the effective driver resistance at the MOSFET's Miller threshold voltage. V_{THMIN} is the typical MOSFET minimum threshold voltage.

Both MOSFETs have I^2R losses while the topside N-channel equation includes an additional term for transition losses, which are highest at high input voltages. For V_{IN} < 20V the high current efficiency generally improves with larger MOSFETs, while for V_{IN} > 20V the transition losses rapidly increase to the point that the use of a higher $R_{DS(ON)}$ device with lower C_{MILLER} actually provides higher efficiency. The synchronous MOSFET losses are greatest at high input voltage when the top switch duty factor is low or during a short-circuit when the synchronous switch is on close to 100% of the period.

The term (1+δ) is generally given for a MOSFET in the form of a normalized $R_{DS(ON)}$ vs Temperature curve, but δ = 0.005/°C can be used as an approximation for low voltage MOSFETs.

The optional Schottky diode D1 shown in Figure 6 conducts during the dead-time between the conduction of the two power MOSFETs. This prevents the body diode of the bottom MOSFET from turning on, storing charge during the dead-time and requiring a reverse recovery period that could cost as much as 3% in efficiency at high V_{IN}. A 1A to 3A Schottky is generally a good compromise for both regions of operation due to the relatively small average current. Larger diodes result in additional transition losses due to their larger junction capacitance.

APPLICATIONS INFORMATION

C_{IN} and C_{OUT} Selection

In continuous mode, the source current of the top MOSFET is a square wave of duty cycle $(V_{OUT})/(V_{IN})$. To prevent large voltage transients, a low ESR capacitor sized for the maximum RMS current must be used. The maximum RMS capacitor current is given by:

$$C_{IN}\ \text{Required}\ I_{RMS} \approx \frac{I_{MAX}}{V_{IN}}\left[\left(V_{OUT}\right)\left(V_{IN}-V_{OUT}\right)\right]^{1/2}$$

This formula has a maximum at $V_{IN} = 2V_{OUT}$, where $I_{RMS} = I_{OUT}/2$. This simple worst-case condition is commonly used for design because even significant deviations do not offer much relief. Note that capacitor manufacturers' ripple current ratings are often based on only 2000 hours of life. This makes it advisable to further derate the capacitor, or to choose a capacitor rated at a higher temperature than required. Several capacitors may be paralleled to meet size or height requirements in the design. Due to the high operating frequency of the LTC3835, ceramic capacitors can also be used for CIN. Always consult the manufacturer if there is any question.

The selection of C_{OUT} is driven by the effective series resistance (ESR). Typically, once the ESR requirement is satisfied, the capacitance is adequate for filtering. The output ripple (ΔV_{OUT}) is approximated by:

$$\Delta V_{OUT} \approx I_{RIPPLE}\left(ESR + \frac{1}{8fC_{OUT}}\right)$$

where f is the operating frequency, C_{OUT} is the output capacitance and I_{RIPPLE} is the ripple current in the inductor. The output ripple is highest at maximum input voltage since I_{RIPPLE} increases with input voltage.

Setting Output Voltage

The LTC3835 output voltage is set by an external feedback resistor divider carefully placed across the output, as shown in Figure 1. The regulated output voltage is determined by:

$$V_{OUT} = 0.8V \bullet \left(1 + \frac{R_B}{R_A}\right)$$

To improve the frequency response, a feed-forward capacitor, C_{FF}, may be used. Great care should be taken to route the V_{FB} line away from noise sources, such as the inductor and the SW line.

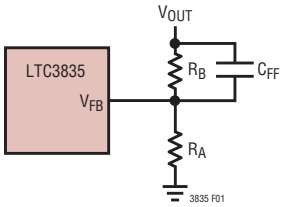

Figure 1. Setting Output Voltage

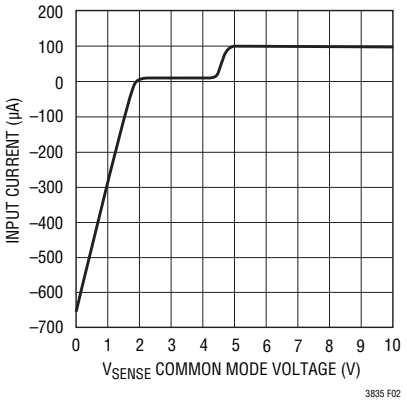

Figure 2. SENSE Pins Input Bias Current vs Common Mode Voltage

SENSE+ and SENSE– Pins

The common mode input range of the current comparator is from 0V to 10V. Continuous linear operation is provided throughout this range allowing output voltages from 0.8V to 10V. The input stage of the current comparator requires that current either be sourced or sunk from the SENSE pins depending on the output voltage, as shown in the curve in Figure 2. If the output voltage is below 1.5V, current will flow out of both SENSE pins to the main output. In these cases, the output can be easily pre-loaded by the V_{OUT} resistor divider to compensate for the current comparator's negative input bias current. Since V_{FB} is servoed to the 0.8V reference voltage, R_A in Figure 1 should be chosen to be less than $0.8V/I_{SENSE}$, with I_{SENSE} determined from Figure 2 at the specified output voltage.

APPLICATIONS INFORMATION

Tracking and Soft-Start (TRACK/SS Pin)

The start-up of V_{OUT} is controlled by the voltage on the TRACK/SS pin. When the voltage on the TRACK/SS pin is less than the internal 0.8V reference, the LTC3835 regulates the V_{FB} pin voltage to the voltage on the TRACK/SS pin instead of 0.8V. The TRACK/SS pin can be used to program an external soft-start function or to allow V_{OUT} to "track" another supply during start-up.

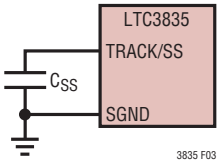

Figure 3. Using the TRACK/SS Pin to Program Soft-Start

Soft-start is enabled by simply connecting a capacitor from the TRACK/SS pin to ground, as shown in Figure 3. An internal 1µA current source charges up the capacitor, providing a linear ramping voltage at the TRACK/SS pin. The LTC3835 will regulate the V_{FB} pin (and hence V_{OUT}) according to the voltage on the TRACK/SS pin, allowing V_{OUT} to rise smoothly from 0V to its final regulated value. The total soft-start time will be approximately:

$$t_{SS} = C_{SS} \bullet \frac{0.8V}{1\mu A}$$

Alternatively, the TRACK/SS pin can be used to track two (or more) supplies during start-up, as shown qualitatively in Figures 4a and 4b. To do this, a resistor divider should be connected from the master supply (V_X) to the TRACK/SS pin of the slave supply (V_{OUT}), as shown in Figure 5. During start-up V_{OUT} will track V_X according to the ratio set by the resistor divider:

$$\frac{V_X}{V_{OUT}} = \frac{R_A}{R_{TRACKA}} \bullet \frac{R_{TRACKA} + R_{TRACKB}}{R_A + R_B}$$

For coincident tracking ($V_{OUT} = V_X$ during start-up),

$R_A = R_{TRACKA}$

$R_B = R_{TRACKB}$

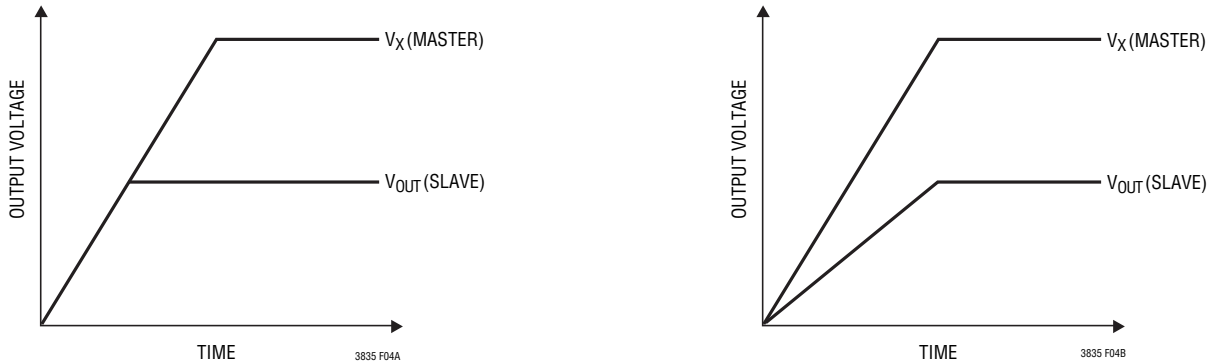

(4a) Coincident Tracking **(4b) Ratiometric Tracking**

Figure 4. Two Different Modes of Output Voltage Tracking

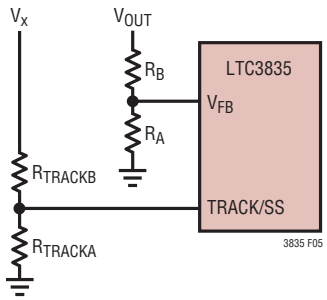

Figure 5. Using the TRACK/SS Pin for Tracking

APPLICATIONS INFORMATION

INTVCC Regulators

The LTC3835 features two separate internal P-channel low dropout linear regulators (LDO) that supply power at the $INTV_{CC}$ pin from either the V_{IN} supply pin or the $EXTV_{CC}$ pin, respectively, depending on the connection of the $EXTV_{CC}$ pin. $INTV_{CC}$ powers the gate drivers and much of the LTC3835's internal circuitry. The V_{IN} LDO regulates the voltage at the $INTV_{CC}$ pin to 5.25V and the $EXTV_{CC}$ LDO regulates it to 7.5V. Each of these can supply a peak current of 50mA and must be bypassed to ground with a minimum of 4.7µF tantalum, 10µF special polymer, or low ESR electrolytic capacitor. A ceramic capacitor with a minimum value of 4.7µF can also be used if a 1Ω resistor is added in series with the capacitor. No matter what type of bulk capacitor is used, an additional 1µF ceramic capacitor placed directly adjacent to the $INTV_{CC}$ and PGND IC pins is highly recommended. Good bypassing is needed to supply the high transient currents required by the MOSFET gate drivers and to prevent interaction between the channels.

High input voltage applications in which large MOSFETs are being driven at high frequencies may cause the maximum junction temperature rating for the LTC3835 to be exceeded. The $INTV_{CC}$ current, which is dominated by the gate charge current, may be supplied by either the 5V V_{IN} LDO or the 7.5V $EXTV_{CC}$ LDO. When the voltage on the $EXTV_{CC}$ pin is less than 4.7V, the V_{IN} LDO is enabled. Power dissipation for the IC in this case is highest and is equal to $V_{IN} \bullet I_{INTVCC}$. The gate charge current is dependent on operating frequency as discussed in the Efficiency Considerations section. The junction temperature can be estimated by using the equations given in Note 2 of the Electrical Characteristics. For example, the LTC3835 $INTV_{CC}$ current is limited to less than 41mA from a 24V supply when in the G package and not using the $EXTV_{CC}$ supply:

$$T_J = 70°C + (41mA)(36V)(95°C/W) = 125°C$$

To prevent the maximum junction temperature from being exceeded, the input supply current must be checked while operating in continuous conduction mode (PLLIN/MODE = $INTV_{CC}$) at maximum V_{IN}.

When the voltage applied to $EXTV_{CC}$ rises above 4.7V, the V_{IN} LDO is turned off and the $EXTV_{CC}$ LDO is enabled. The $EXTV_{CC}$ LDO remains on as long as the voltage applied to $EXTV_{CC}$ remains above 4.5V. The $EXTV_{CC}$ LDO attempts to regulate the $INTV_{CC}$ voltage to 7.5V, so while $EXTV_{CC}$ is less than 7.5V, the LDO is in dropout and the $INTV_{CC}$ voltage is approximately equal to $EXTV_{CC}$. When $EXTV_{CC}$ is greater than 7.5V up to an absolute maximum of 10V, $INTV_{CC}$ is regulated to 7.5V.

Using the $EXTV_{CC}$ LDO allows the MOSFET driver and control power to be derived from the LTC3835 switching regulator output ($4.7V \le V_{OUT} \le 10V$) during normal operation and from the V_{IN} LDO when the output is out of regulation (e.g., startup, short-circuit). If more cur-rent is required through the $EXTV_{CC}$ LDO than is specified, an external Schottky diode can be added between the $EXTV_{CC}$ and $INTV_{CC}$ pins. Do not apply more than 10V to the $EXTV_{CC}$ pin and make sure than $EXTV_{CC} \le V_{IN}$.

Significant efficiency and thermal gains can be realized by powering $INTV_{CC}$ from the output, since the V_{IN} current resulting from the driver and control currents will be scaled by a factor of (Duty Cycle)/(Switcher Efficiency). For 4.7V to 10V regulator outputs, this means connecting the $EXTV_{CC}$ pin directly to V_{OUT}. Tying the $EXTV_{CC}$ pin to a 5V supply reduces the junction temperature in the previous example from 125°C to:

$$T_J = 70°C + (24mA)(5V)(95°C/W) = 81°C$$

However, for 3.3V and other low voltage outputs, additional circuitry is required to derive $INTV_{CC}$ power from the output.

The following list summarizes the four possible connections for $EXTV_{CC}$:

1. $EXTV_{CC}$ Left Open (or Grounded). This will cause $INTV_{CC}$ to be powered from the internal 5.25V regulator resulting in an efficiency penalty of up to 10% at high input voltages.
2. $EXTV_{CC}$ Connected Directly to V_{OUT}. This is the normal connection for a 5V regulator and provides the highest efficiency.
3. $EXTV_{CC}$ Connected to an External supply. If an external supply is available in the 5V to 7V range, it may be used to power $EXTV_{CC}$ providing it is compatible with the MOSFET gate drive requirements.

APPLICATIONS INFORMATION

4. $EXTV_{CC}$ Connected to an Output-Derived Boost Network. For 3.3V and other low voltage regulators, efficiency gains can still be realized by connecting $EXTV_{CC}$ to an output-derived voltage that has been boosted to greater than 4.7V. This can be done with the capacitive charge pump shown in Figure 6.

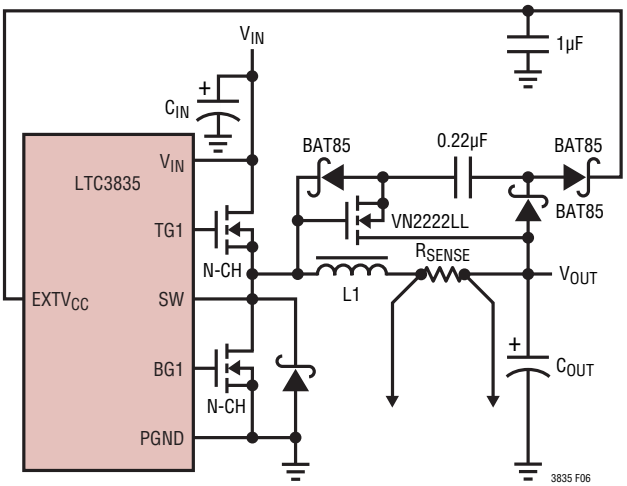

Figure 6. Capacitive Charge Pump for $EXTV_{CC}$

Topside MOSFET Driver Supply (C_B, D_B)

External bootstrap capacitors C_B connected to the BOOST pins supply the gate drive voltages for the topside MOSFET. Capacitor C_B in the Functional Diagram is charged though external diode D_B from $INTV_{CC}$ when the SW pin is low. When the topside MOSFET is to be turned on, the driver places the C_B voltage across the gate-source of the desired MOSFET. This enhances the MOSFET and turns on the topside switch. The switch node voltage, SW, rises to V_{IN} and the BOOST pin follows. With the topside MOSFET on, the boost voltage is above the input supply: $V_{BOOST} = V_{IN} + V_{INTVCC}$. The value of the boost capacitor C_B needs to be 100 times that of the total input capacitance of the topside MOSFET. The reverse breakdown of the external Schottky diode must be greater than $V_{IN(MAX)}$. When adjusting the gate drive level, the final arbiter is the total input current for the regulator. If a change is made and the input current decreases, then the efficiency has improved. If there is no change in input current, then there is no change in efficiency.

Fault Conditions: Current Limit and Current Foldback

The LTC3835 includes current foldback to help limit load current when the output is shorted to ground. If the output falls below 70% of its nominal output level, then the maximum sense voltage is progressively lowered from 100mV to 30mV. Under short-circuit conditions with very low duty cycles, the LTC3835 will begin cycle skipping in order to limit the short-circuit current. In this situation the bottom MOSFET will be dissipating most of the power but less than in normal operation. The short-circuit ripple current is determined by the minimum on-time $t_{ON(MIN)}$ of the LTC3835 (≈180ns), the input voltage and inductor value:

$$\Delta I_{L(SC)} = t_{ON(MIN)} (V_{IN}/L)$$

The resulting short-circuit current is:

$$I_{SC} = \frac{10mV}{R_{SENSE}} - \frac{1}{2}\Delta I_{L(SC)}$$

Fault Conditions: Overvoltage Protection (Crowbar)

The overvoltage crowbar is designed to blow a system input fuse when the output voltage of the regulator rises much higher than nominal levels. The crowbar causes huge currents to flow, that blow the fuse to protect against a shorted top MOSFET if the short occurs while the controller is operating.

A comparator monitors the output for overvoltage conditions. The comparator (OV) detects overvoltage faults greater than 10% above the nominal output voltage. When this condition is sensed, the top MOSFET is turned off and the bottom MOSFET is turned on until the overvoltage condition is cleared. The bottom MOSFET remains on continuously for as long as the overvoltage condition persists; if V_{OUT} returns to a safe level, normal operation automatically resumes. A shorted top MOSFET will result in a high current condition which will open the system fuse. The switching regulator will regulate properly with a leaky top MOSFET by altering the duty cycle to accommodate the leakage.

APPLICATIONS INFORMATION

Phase-Locked Loop and Frequency Synchronization

The LTC3835 has a phase-locked loop (PLL) comprised of an internal voltage-controlled oscillator (VCO) and a phase detector. This allows the turn-on of the top MOSFET (TG) to be locked to the rising edge of an external clock signal applied to the PLLIN/MODE pin. The phase detector is an edge sensitive digital type that provides zero degrees phase shift between the external and internal oscillators. This type of phase detector does not exhibit false lock to harmonics of the external clock.

The output of the phase detector is a pair of complementary current sources that charge or discharge the external filter network connected to the PLLLPF pin. The relationship between the voltage on the PLLLPF pin and operating frequency, when there is a clock signal applied to PLLIN/MODE, is shown in Figure 7 and specified in the Electrical Characteristics table. Note that the LTC3835 can only be synchronized to an external clock whose frequency is within range of the LTC3835's internal VCO, which is nominally 115kHz to 800kHz. This is guaranteed to be between 140kHz and 650kHz. A simplified block diagram is shown in Figure 8.

If the external clock frequency is greater than the internal oscillator's frequency, f_{OSC}, then current is sourced continuously from the phase detector output, pulling up the PLLLPF pin. When the external clock frequency is less than f_{OSC}, current is sunk continuously, pulling down the PLLLPF pin. If the external and internal frequencies are the same but exhibit a phase difference, the current sources turn on for an amount of time corresponding to the phase difference. The voltage on the PLLLPF pin is adjusted until the phase and frequency of the internal and external oscillators are identical. At the stable operating point, the phase detector output is high impedance and the filter capacitor C_{LP} holds the voltage.

The loop filter components, C_{LP} and R_{LP}, smooth out the current pulses from the phase detector and provide a stable input to the voltage-controlled oscillator. The filter components C_{LP} and R_{LP} determine how fast the loop acquires lock. Typically R_{LP} = 10k and C_{LP} is 2200pF to 0.01µF.

Typically, the external clock (on PLLIN/MODE pin) input high threshold is 1.6V, while the input low threshold is 1.2V.

Table 2 summarizes the different states in which the PLLLPF pin can be used.

Table 2

PLLLPF PIN	PLLIN/MODE PIN	FREQUENCY
0V	DC Voltage	250kHz
Floating	DC Voltage	400kHz
$INTV_{CC}$	DC Voltage	530kHz
RC Loop Filter	Clock Signal	Phase-Locked to External Clock

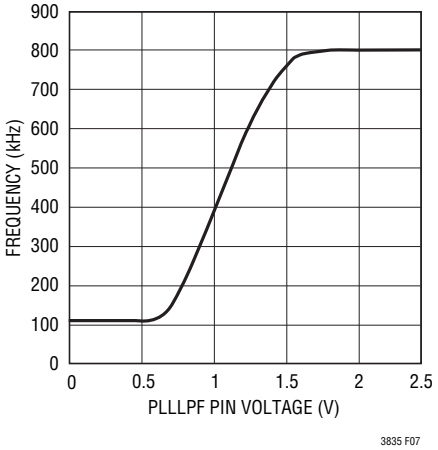

Figure 7. Relationship Between Oscillator Frequency and Voltage at the PLLLPF Pin When Synchronizing to an External Clock

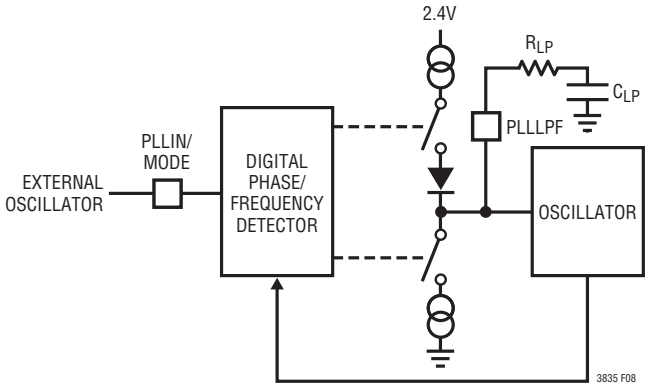

Figure 8. Phase-Locked Loop Block Diagram

APPLICATIONS INFORMATION

Minimum On-Time Considerations

Minimum on-time $t_{ON(MIN)}$ is the smallest time duration that the LTC3835 is capable of turning on the top MOSFET. It is determined by internal timing delays and the gate charge required to turn on the top MOSFET. Low duty cycle applications may approach this minimum on-time limit and care should be taken to ensure that

$$t_{ON(MIN)} < \frac{V_{OUT}}{V_{IN}(f)}$$

If the duty cycle falls below what can be accommodated by the minimum on-time, the controller will begin to skip cycles. The output voltage will continue to be regulated, but the ripple voltage and current will increase.

The minimum on-time for the LTC3835 is approximately 180ns. However, as the peak sense voltage decreases the minimum on-time gradually increases up to about 200ns. This is of particular concern in forced continuous applications with low ripple current at light loads. If the duty cycle drops below the minimum on-time limit in this situation, a significant amount of cycle skipping can occur with correspondingly larger current and voltage ripple.

Efficiency Considerations

The percent efficiency of a switching regulator is equal to the output power divided by the input power times 100%. It is often useful to analyze individual losses to determine what is limiting the efficiency and which change would produce the most improvement. Percent efficiency can be expressed as:

$$\%Efficiency = 100\% - (L1 + L2 + L3 + ...)$$

where L1, L2, etc. are the individual losses as a percentage of input power.

Although all dissipative elements in the circuit produce losses, four main sources usually account for most of the losses in LTC3835 circuits: 1) IC V_{IN} current, 2) $INTV_{CC}$ regulator current, 3) I^2R losses, 4) Topside MOSFET transition losses.

1. The V_{IN} current has two components: the first is the DC supply current given in the Electrical Characteristics table, which excludes MOSFET driver and control currents; the second is the current drawn from the 3.3V linear regulator output. V_{IN} current typically results in a small (< 0.1%) loss.

2. $INTV_{CC}$ current is the sum of the MOSFET driver and control currents. The MOSFET driver current results from switching the gate capacitance of the power MOSFETs. Each time a MOSFET gate is switched from low to high to low again, a packet of charge dQ moves from $INTV_{CC}$ to ground. The resulting dQ/dt is a current out of $INTV_{CC}$ that is typically much larger than the control circuit current. In continuous mode, $I_{GATECHG} = f(Q_T+Q_B)$, where Q_T and Q_B are the gate charges of the topside and bottom side MOSFETs.

   Supplying $INTV_{CC}$ power through the $EXTV_{CC}$ switch input from an output-derived source will scale the VIN current required for the driver and control circuits by a factor of (Duty Cycle)/(Efficiency). For example, in a 20V to 5V application, 10mA of $INTV_{CC}$ current results in approximately 2.5mA of V_{IN} current. This reduces the mid-current loss from 10% or more (if the driver was powered directly from V_{IN}) to only a few percent.

3. I^2R losses are predicted from the DC resistances of the fuse (if used), MOSFET, inductor, current sense resistor, and input and output capacitor ESR. In continuous mode the average output current flows through L and R_{SENSE}, but is "chopped" between the topside MOSFET and the synchronous MOSFET. If the two MOSFETs have approximately the same $R_{DS(ON)}$, then the resistance of one MOSFET can simply be summed with the resistances of L, R_{SENSE} and ESR to obtain I^2R losses. For example, if each $R_{DS(ON)}$ = 30mΩ, R_L = 50mΩ, R_{SENSE} = 10mΩ and R_{ESR} = 40mΩ (sum of both input and output capacitance losses), then the total resistance is 130mΩ. This results in losses ranging from 3% to 13% as the output current increases from 1A to 5A for

APPLICATIONS INFORMATION

a 5V output, or a 4% to 20% loss for a 3.3V output. Efficiency varies as the inverse square of V_{OUT} for the same external components and output power level. The combined effects of increasingly lower output voltages and higher currents required by high performance digital systems is not doubling but quadrupling the importance of loss terms in the switching regulator system!

4. Transition losses apply only to the topside MOSFET, and become significant only when operating at high input voltages (typically 15V or greater). Transition losses can be estimated from:

$$\text{Transition Loss} = (1.7)\ V_{IN}2\ I_{O(MAX)}\ C_{RSS}\ f$$

Other "hidden" losses such as copper trace and internal battery resistances can account for an additional 5% to 10% efficiency degradation in portable systems. It is very important to include these "system" level losses during the design phase. The internal battery and fuse resistance losses can be minimized by making sure that C_{IN} has adequate charge storage and very low ESR at the switching frequency. A 25W supply will typically require a minimum of 20µF to 40µF of capacitance having a maximum of 20mΩ to 50mΩ of ESR. Other losses including Schottky conduction losses during dead-time and inductor core losses generally account for less than 2% total additional loss.

Checking Transient Response

The regulator loop response can be checked by looking at the load current transient response. Switching regulators take several cycles to respond to a step in DC (resistive) load current. When a load step occurs, V_{OUT} shifts by an amount equal to ΔI_{LOAD} (ESR), where ESR is the effective series resistance of C_{OUT}. ΔI_{LOAD} also begins to charge or discharge C_{OUT} generating the feedback error signal that forces the regulator to adapt to the current change and return V_{OUT} to its steady-state value. During this recovery time V_{OUT} can be monitored for excessive overshoot or ringing, which would indicate a stability problem. OPTI-LOOP compensation allows the transient response to be optimized over a wide range of output capacitance and ESR values. *The availability of the I_{TH} pin not only allows optimization of control loop behavior but also provides a DC coupled and AC filtered closed loop response test point. The DC step, rise time and settling at this test point truly reflects the closed loop response.* Assuming a predominantly second order system, phase margin and/or damping factor can be estimated using the percentage of overshoot seen at this pin. The bandwidth can also be estimated by examining the rise time at the pin. The I_{TH} external components shown in the Typical Application circuit will provide an adequate starting point for most applications.

The I_{TH} series RC-CC filter sets the dominant pole-zero loop compensation. The values can be modified slightly (from 0.5 to 2 times their suggested values) to optimize transient response once the final PC layout is done and the particular output capacitor type and value have been determined. The output capacitors need to be selected because the various types and values determine the loop gain and phase. An output current pulse of 20% to 80% of full-load current having a rise time of 1µs to 10µs will produce output voltage and I_{TH} pin waveforms that will give a sense of the overall loop stability without breaking the feedback loop. Placing a power MOSFET directly across the output capacitor and driving the gate with an appropriate signal generator is a practical way to produce a realistic load step condition. The initial output voltage step resulting from the step change in output current may not be within the bandwidth of the feedback loop, so this signal cannot be used to determine phase margin. This is why it is better to look at the I_{TH} pin signal which is in the feedback loop and is the filtered and compensated control loop response. The gain of the loop will be increased by increasing R_C and the bandwidth of the loop will be increased by decreasing C_C. If R_C is increased by the same factor that C_C is decreased, the zero frequency will be kept the same, thereby keeping the phase shift the same in the

APPLICATIONS INFORMATION

most critical frequency range of the feedback loop. The output voltage settling behavior is related to the stability of the closed-loop system and will demonstrate the actual overall supply performance.

A second, more severe transient is caused by switching in loads with large (>1µF) supply bypass capacitors. The discharged bypass capacitors are effectively put in parallel with C_{OUT}, causing a rapid drop in V_{OUT}. No regulator can alter its delivery of current quickly enough to prevent this sudden step change in output voltage if the load switch resistance is low and it is driven quickly. If the ratio of C_{LOAD} to C_{OUT} is greater than 1:50, the switch rise time should be controlled so that the load rise time is limited to approximately 25 • C_{LOAD}. Thus a 10µF capacitor would require a 250µs rise time, limiting the charging current to about 200mA.

Design Example

As a design example, assume V_{IN} = 12V(nominal), V_{IN} = 22V(max), V_{OUT} = 1.8V, I_{MAX} = 5A, and f = 250kHz.

The inductance value is chosen first based on a 30% ripple current assumption. The highest value of ripple current occurs at the maximum input voltage. Tie the PLLLPF pin to GND, generating 250kHz operation. The minimum inductance for 30% ripple current is:

$$\Delta I_L = \frac{V_{OUT}}{(f)(L)}\left(1-\frac{V_{OUT}}{V_{IN}}\right)$$

A 4.7µH inductor will produce 23% ripple current and a 3.3µH will result in 33%. The peak inductor current will be the maximum DC value plus one half the ripple current, or 5.84A, for the 3.3µH value. Increasing the ripple current will also help ensure that the minimum on-time of 180ns is not violated. The minimum on-time occurs at maxi-mum V_{IN}:

$$t_{ON(MIN)} = \frac{V_{OUT}}{V_{IN(MAX)}f} = \frac{1.8V}{22V(250kHz)} = 327ns$$

The R_{SENSE} resistor value can be calculated by using the maximum current sense voltage specification with some accommodation for tolerances:

$$R_{SENSE} \le \frac{80mV}{5.84A} \approx 0.012\Omega$$

Choosing 1% resistors: R1 = 25.5k and R2 = 32.4k yields an output voltage of 1.816V.

The power dissipation on the top side MOSFET can be easily estimated. Choosing a Fairchild FDS6982S dual MOSFET results in: $R_{DS(ON)}$ = 0.035Ω/0.022Ω, C_{MILLER} = 215pF. At maximum input voltage with T(estimated) = 50°C:

$$P_{MAIN} = \frac{1.8V}{22V}(5)^2\left[1+(0.005)(50°C-25°C)\right]\bullet$$
$$(0.035\Omega)+(22V)^2\left(\frac{5A}{2}\right)(4\Omega)(215pF)\bullet$$
$$\left[\frac{1}{5-2.3}+\frac{1}{2.3}\right](300kHz) = 332mW$$

A short-circuit to ground will result in a folded back current of:

$$I_{SC} = \frac{25mV}{0.01\Omega} - \frac{1}{2}\left(\frac{120ns(22V)}{3.3\mu H}\right) = 2.1A$$

with a typical value of $R_{DS(ON)}$ and δ = (0.005/°C)(20) = 0.1. The resulting power dissipated in the bottom MOSFET is:

$$P_{SYNC} = \frac{22V-1.8V}{22V}(2.1A)^2(1.125)(0.022\Omega)$$
$$= 100mW$$

which is less than under full-load conditions.

C_{IN} is chosen for an RMS current rating of at least 3A at temperature assuming only this channel is on. COUT is chosen with an ESR of 0.02Ω for low output ripple. The output ripple in continuous mode will be highest at the maximum input voltage. The output voltage ripple due to ESR is approximately:

$$V_{ORIPPLE} = R_{ESR}(\Delta I_L) = 0.02\Omega(1.67A) = 33mV_{P-P}$$

APPLICATIONS INFORMATION

PC Board Layout Checklist

When laying out the printed circuit board, the following checklist should be used to ensure proper operation of the IC. These items are also illustrated graphically in the layout diagram of Figure 9. The Figure 10 illustrates the current waveforms present in the various branches of the synchronous regulator operating in the continuous mode. Check the following in your layout:

1. Is the top N-channel MOSFET M1 located within 1cm of C_{IN}?
2. Are the signal and power grounds kept separate? The combined IC signal ground pin and the ground return of C_{INTVCC} must return to the combined C_{OUT} (–) terminals. The path formed by the top N-channel MOSFET, Schottky diode and the C_{IN} capacitor should have short leads and PC trace lengths. The output capacitor (–) terminals should be connected as close as possible to the (–) terminals of the input capacitor by placing the capacitors next to each other and away from the Schottky loop described above.
3. Does the LTC3835 V_{FB} pin resistive divider connect to the (+) terminals of C_{OUT}? The resistive divider must be connected between the (+) terminal of C_{OUT} and signal ground. The feedback resistor connections should not be along the high current input feeds from the input capacitor(s).
4. Are the $SENSE^-$ and $SENSE^+$ leads routed together with minimum PC trace spacing? The filter capacitor between $SENSE^+$ and $SENSE^-$ should be as close as possible to the IC. Ensure accurate current sensing with Kelvin connections at the SENSE resistor.
5. Is the $INTV_{CC}$ decoupling capacitor connected close to the IC, between the $INTV_{CC}$ and the power ground pins? This capacitor carries the MOSFET drivers current peaks. An additional 1µF ceramic capacitor placed immediately next to the $INTV_{CC}$ and PGND pins can help improve noise performance substantially.
6. Keep the switching node (SW), top gate node (TG), and boost node (BOOST) away from sensitive small-signal nodes. All of these nodes have very large and fast moving signals and therefore should be kept on the "output side" of the LTC3835 and occupy minimum PC trace area.
7. Use a modified "star ground" technique: a low impedance, large copper area central grounding point on the same side of the PC board as the input and output capacitors with tie-ins for the bottom of the $INTV_{CC}$ decoupling capacitor, the bottom of the voltage feedback resistive divider and the SGND pin of the IC.

PC Board Layout Debugging

It is helpful to use a DC-50MHz current probe to monitor the current in the inductor while testing the circuit. Monitor the output switching node (SW pin) to synchronize the oscilloscope to the internal oscillator and probe the actual output voltage as well. Check for proper performance over the operating voltage and current range expected in the application. The frequency of operation should be maintained over the input voltage range down to dropout and until the output load drops below the low current operation threshold—typically 10% of the maximum designed current level in Burst Mode operation.

The duty cycle percentage should be maintained from cycle to cycle in a well-designed, low noise PCB implementation. Variation in the duty cycle at a subharmonic rate can suggest noise pickup at the current or voltage sensing inputs or inadequate loop compensation. Overcompensation of the loop can be used to tame a poor PC layout if regulator bandwidth optimization is not required.

Reduce V_{IN} from its nominal level to verify operation of the regulator in dropout. Check the operation of the undervoltage lockout circuit by further lowering V_{IN} while monitoring the outputs to verify operation.

Investigate whether any problems exist only at higher output currents or only at higher input voltages. If problems coincide with high input voltages and low output currents, look for capacitive coupling between the BOOST, SW, TG, and possibly BG connections and the sensitive voltage and current pins. The capacitor placed across the current sensing pins needs to be placed immediately adjacent to the pins of the IC. This capacitor helps to minimize the effects of differential noise injection due to high frequency capacitive coupling. If problems are encountered with high current output loading at lower input voltages, look for inductive coupling between C_{IN}, Schottky and the top

APPLICATIONS INFORMATION

MOSFET components to the sensitive current and voltage sensing traces. In addition, investigate common ground path voltage pickup between these components and the SGND pin of the IC.

An embarrassing problem, which can be missed in an otherwise properly working switching regulator, results when the current sensing leads are hooked up backwards. The output voltage under this improper hookup will still be maintained but the advantages of current mode control will not be realized. Compensation of the voltage loop will be much more sensitive to component selection. This behavior can be investigated by temporarily shorting out the current sensing resistor—don't worry, the regulator will still maintain control of the output voltage.

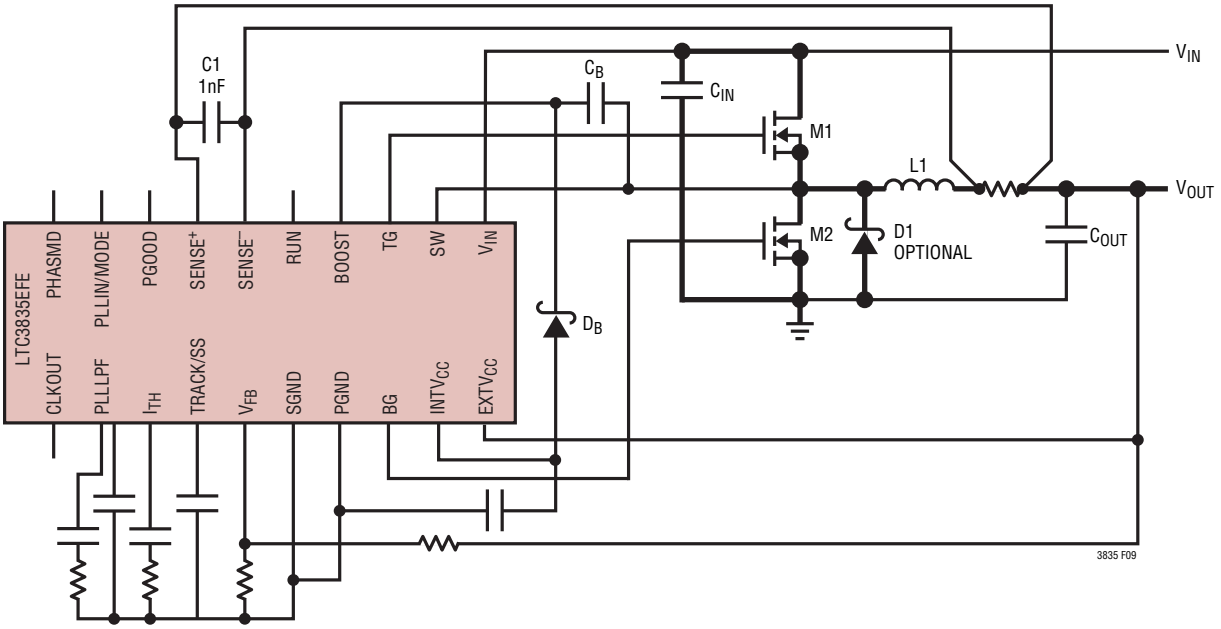

Figure 9. LTC3835 Recommended Printed Circuit Layout Diagram

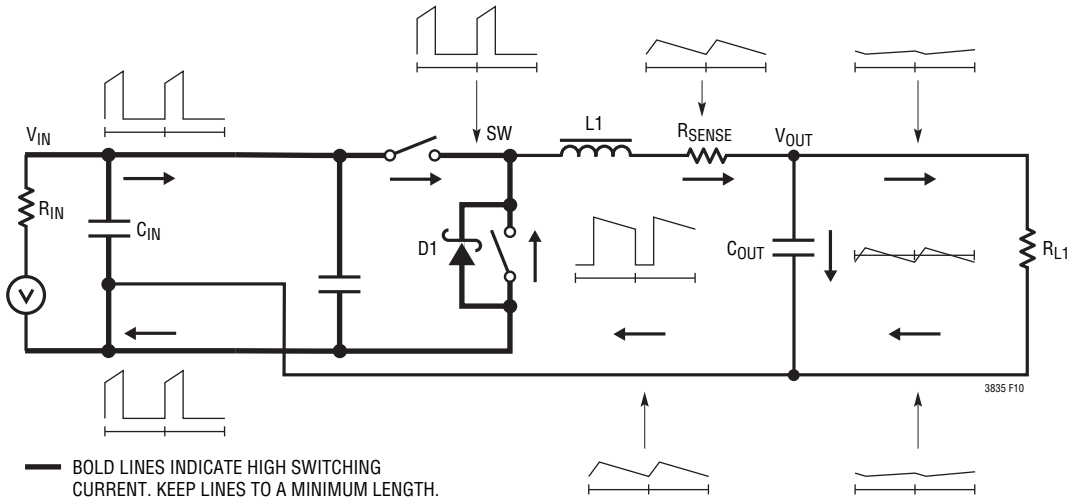

Figure 10. Branch Current Waveforms

TYPICAL APPLICATIONS

High Efficiency 9.5V, 3A Step-Down Converter

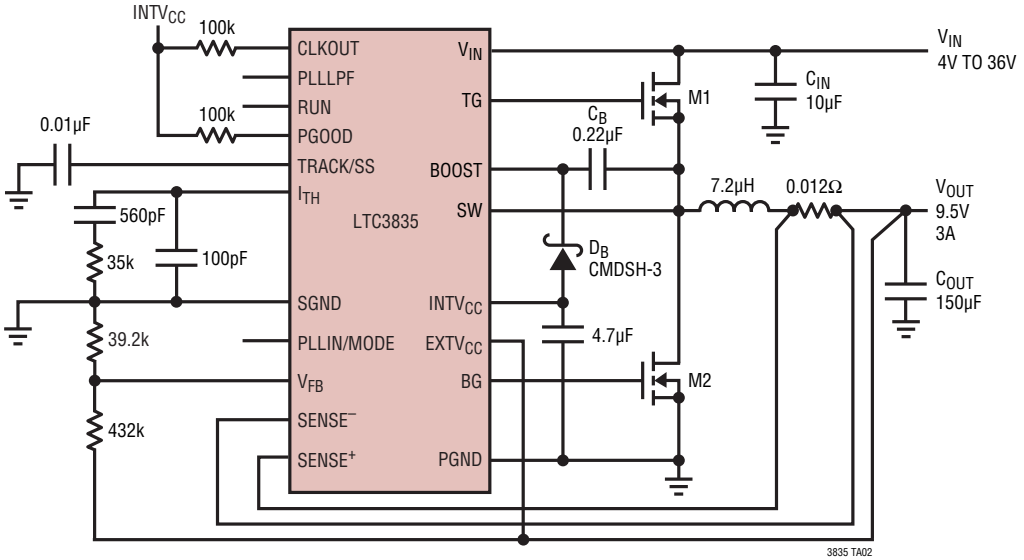

High Efficiency 12V to 1.8V, 2A Step-Down Converter

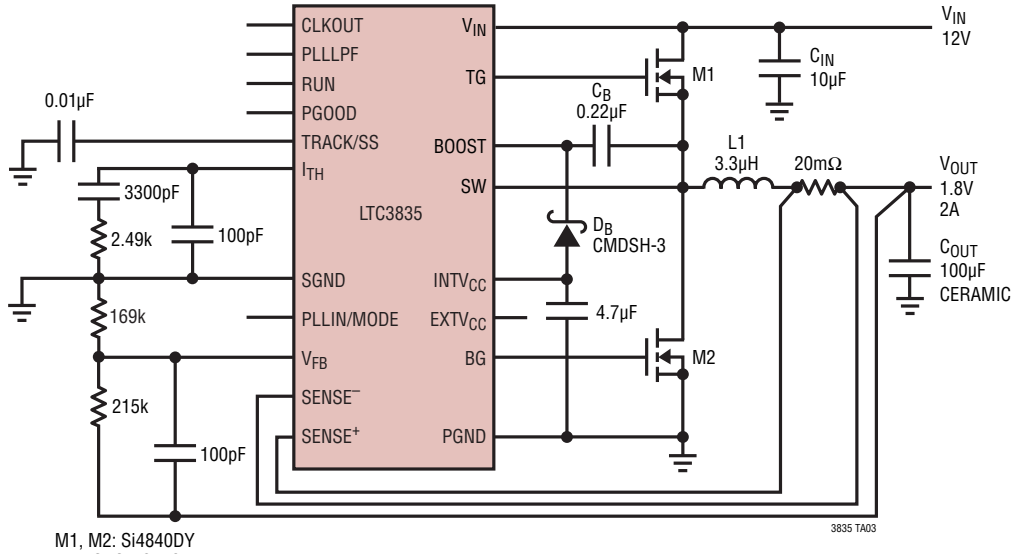

M1, M2: Si4840DY
L1: TOKO DS3LC A915AY-3R3M

TYPICAL APPLICATIONS

High Efficiency 5V, 5A Step-Down Converter

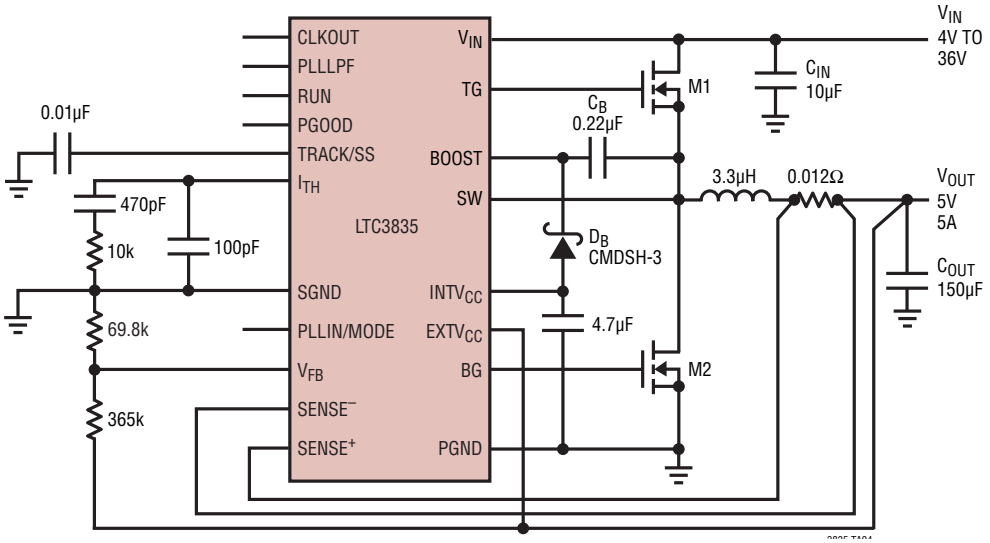

High Efficiency 1.2V, 5A Step-Down Converter

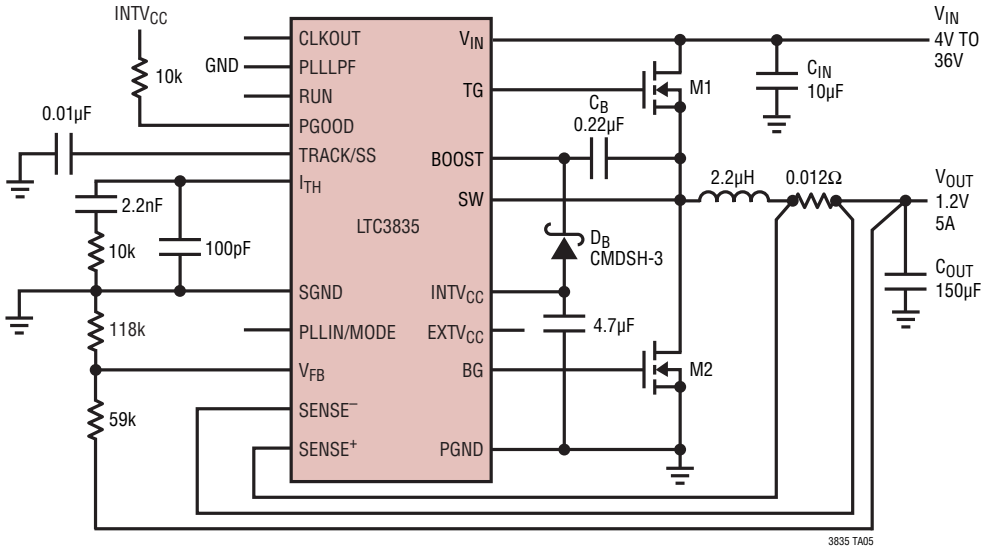

PACKAGE DESCRIPTION

FE Package
20-Lead Plastic TSSOP (4.4mm)
(Reference LTC DWG # 05-08-1663 Rev H)
Exposed Pad Variation CB

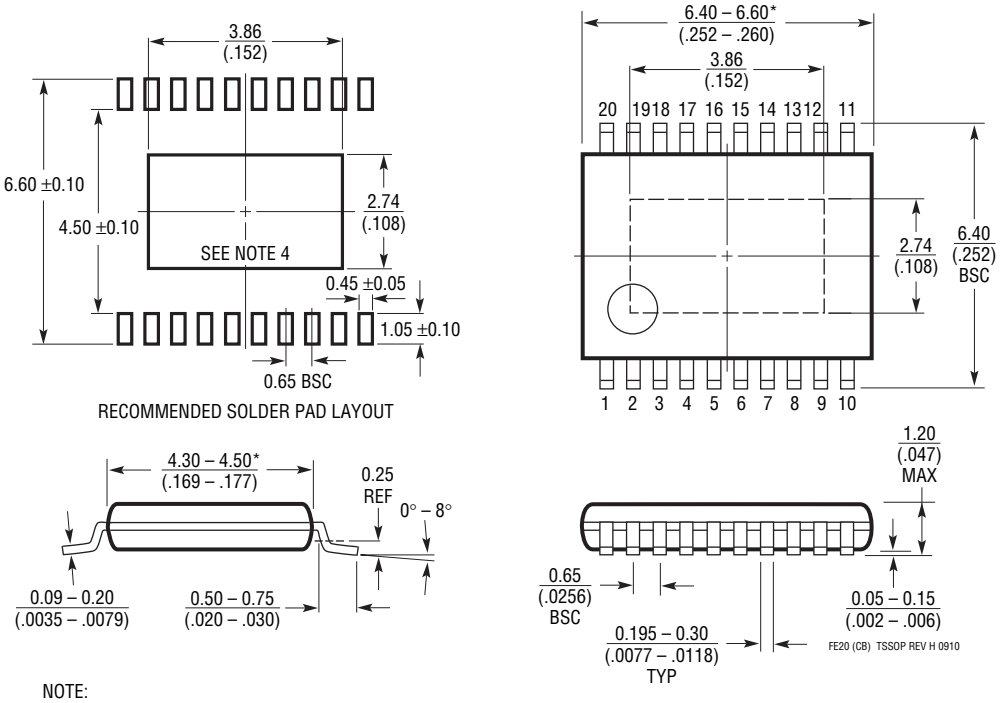

NOTE:
1. CONTROLLING DIMENSION: MILLIMETERS
2. DIMENSIONS ARE IN $\frac{\text{MILLIMETERS}}{\text{(INCHES)}}$
3. DRAWING NOT TO SCALE
4. RECOMMENDED MINIMUM PCB METAL SIZE FOR EXPOSED PAD ATTACHMENT

*DIMENSIONS DO NOT INCLUDE MOLD FLASH. MOLD FLASH SHALL NOT EXCEED 0.150mm (.006") PER SIDE

PACKAGE DESCRIPTION

UFD Package
20-Lead Plastic QFN (4mm × 5mm)
(Reference LTC DWG # 05-08-1711 Rev B)

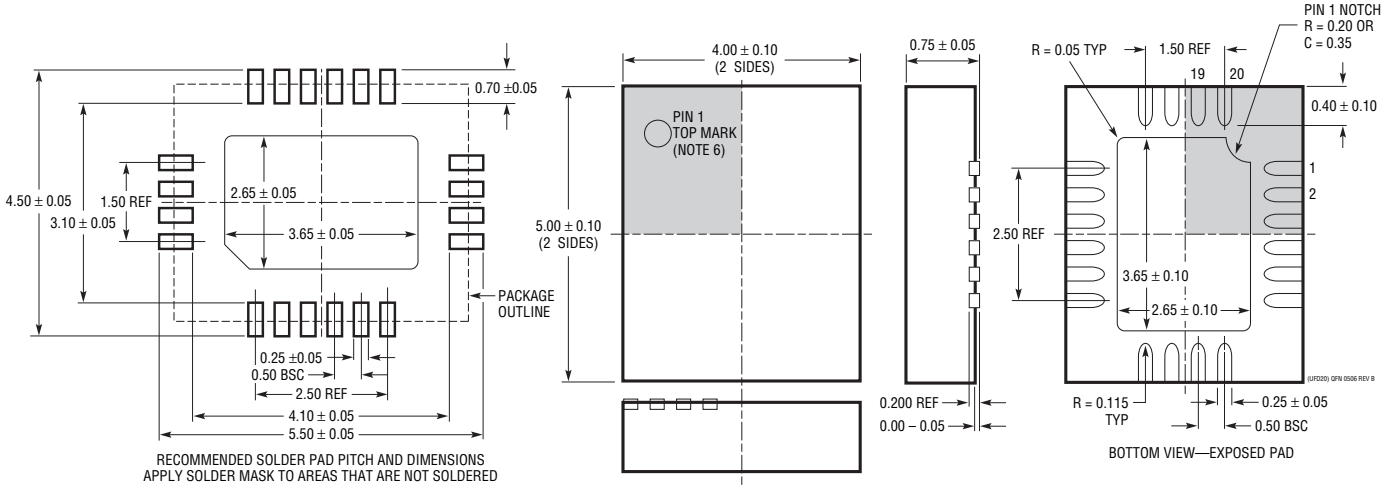

NOTE:
1. DRAWING PROPOSED TO BE MADE A JEDEC PACKAGE OUTLINE MO-220 VARIATION (WXXX-X).
2. DRAWING NOT TO SCALE
3. ALL DIMENSIONS ARE IN MILLIMETERS
4. DIMENSIONS OF EXPOSED PAD ON BOTTOM OF PACKAGE DO NOT INCLUDE MOLD FLASH. MOLD FLASH, IF PRESENT, SHALL NOT EXCEED 0.15mm ON ANY SIDE
5. EXPOSED PAD SHALL BE SOLDER PLATED
6. SHADED AREA IS ONLY A REFERENCE FOR PIN 1 LOCATION ON THE TOP AND BOTTOM OF PACKAGE

REVISION HISTORY (Revision history begins at Rev D)

REV	DATE	DESCRIPTION	PAGE NUMBER
D	11/10	Updated 1st line in Features	1
		Updated SGND description in Pin Functions	8
		Updated Table 1	12
		Updated Related Parts	30

Information furnished by Linear Technology Corporation is believed to be accurate and reliable. However, no responsibility is assumed for its use. Linear Technology Corporation makes no representation that the interconnection of its circuits as described herein will not infringe on existing patent rights.

TYPICAL APPLICATION

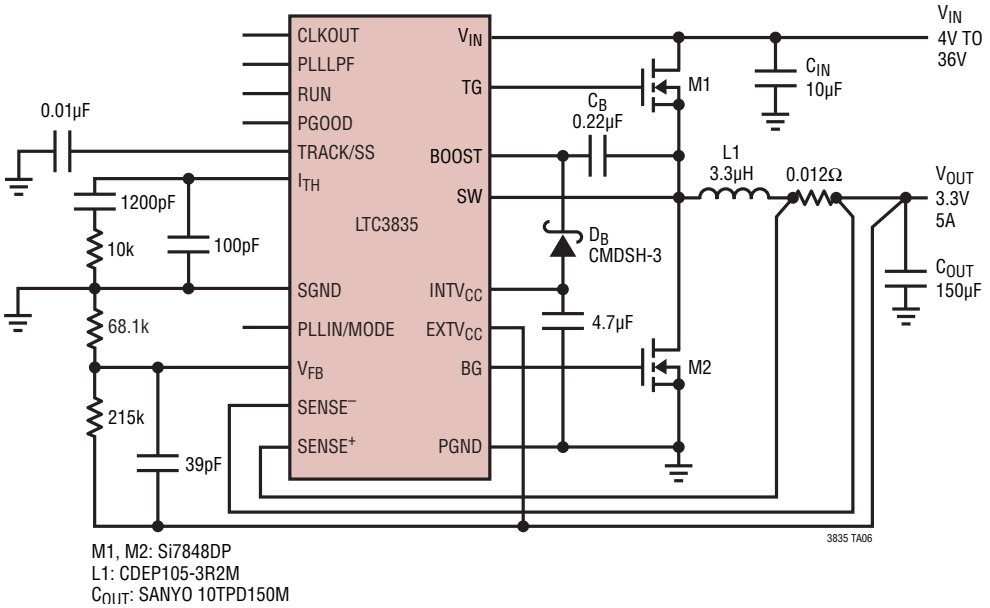

Figure 11. High Efficiency Step-Down Converter

RELATED PARTS

PART NUMBER	DESCRIPTION	COMMENTS
LTC3891	60V, Low I_Q Synchronous Step-Down DC/DC Controller with 99% Duty Cycle and Low 95ns Minimum On-Time	PLL Capable Fixed Operating Frequency 50kHz to 900kHz, $4V \le V_{IN} \le 60V$, $0.8V \le V_{OUT} \le 24V$, $I_Q = 50\mu A$
LTC3834/ LTC3834-1	Low I_Q, Synchronous Step-Down DC/DC Controller with 99% Duty Cycle	PLL Fixed Operating Frequency 140kHz to 900kHz, $4V \le V_{IN} \le 38V$, $0.8V \le V_{OUT} \le 10V$, $I_Q = 30\mu A$
LTC3824	60V, Low I_Q DC/DC Controller with 100% Duty Cycle	Selectable Fixed Operating Frequency 200kHz to 600kHz, $4V \le V_{IN} \le 60V$, $0.8V \le V_{OUT} \le V_{IN}$, $I_Q = 40\mu A$, MSOP-10E
LT3845A	60V, Low I_Q Synchronous Step-Down DC/DC Controller	Adjustable Fixed Operating Frequency 100kHz to 500kHz, $4V \le V_{IN} \le 60V$, $1.23V \le V_{OUT} \le 36V$, $I_Q = 120\mu A$, TSSOP-16E
LTC3890/ LTC3890-1	Low I_Q, Dual Output 2-Phase Synchronous Step-Down DC/DC Controller	PLL Fixed Operating Frequency 50kHz to 900kHz, $4V \le V_{IN} \le 60V$, $0.8V \le V_{OUT} \le 24V$, $I_Q = 50\mu A$
LTC3857/ LTC3857-1	Low I_Q, Dual Output 2-Phase Synchronous Step-Down DC/DC Controller	PLL Fixed Operating Frequency 50kHz to 900kHz, $4V \le V_{IN} \le 38V$, $0.8V \le V_{OUT} \le 24V$, $I_Q = 50\mu A$, Overcurrent Foldback
LTC3858/ LTC3858-1	Low I_Q, Dual Output 2-Phase Synchronous Step-Down DC/DC Controller	PLL Fixed Operating Frequency 50kHz to 900kHz, $4V \le V_{IN} \le 38V$, $0.8V \le V_{OUT} \le 24V$, $I_Q = 170\mu A$, Overcurrent Latchoff
LTC3854	Small Footprint Synchronous Step-Down DC/DC Controller	Fixed 400kHz Operating Frequency, $4.5V \le V_{IN} \le 38V$, $0.8V \le V_{OUT} \le 5.25V$, 2mm × 3mm QFN-12
LTC3851A/ LTC3851A-1	No R_{SENSE}™ Wide V_{IN} Range Synchronous Step-Down DC/DC Controller	PLL Fixed Operating Frequency 250kHz to 750kHz, $4V \le V_{IN} \le 38V$, $0.8V \le V_{OUT} \le 5.25V$, MSOP-16E, 3mm × 3mm QFN-16, SSOP-16
LTC3827/ LTC3827-1	Low I_Q, Dual Synchronous Controller	2-Phase Operation; 115µA Total No Load I_Q, $4V \le V_{IN} \le 36V$ 80µA No Load I_Q with One Channel On

Linear Technology Corporation
1630 McCarthy Blvd., Milpitas, CA 95035-7417
(408) 432-1900 • FAX: (408) 434-0507 • www.linear.com
LT 1110 REV D • PRINTED IN USA
© LINEAR TECHNOLOGY CORPORATION 2008