www.jbctools.com

INSTRUCTION MANUAL

TES / JTS

Stand for Heater Hose Set

sales@prom-elec.com / ООО ПРОМЭЛЕКТРОНИКА

This manual corresponds to the following references:

TE-SF *(for TE Precision Heater Hose Set)*
JT-SF *(for JT Heater Hose Set)*

Packing List

Box includes one stand according to purchased reference.

Stand for
TE Precision Heater Hose Set ..... 1 unit

Stand for
JT Heater Hose Set ..... 1 unit

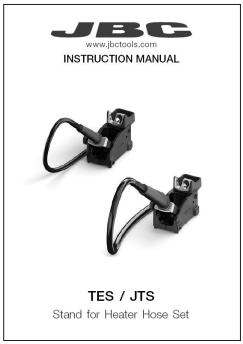

Manual ..... 1 unit
Ref. 0027184

Features and Connections

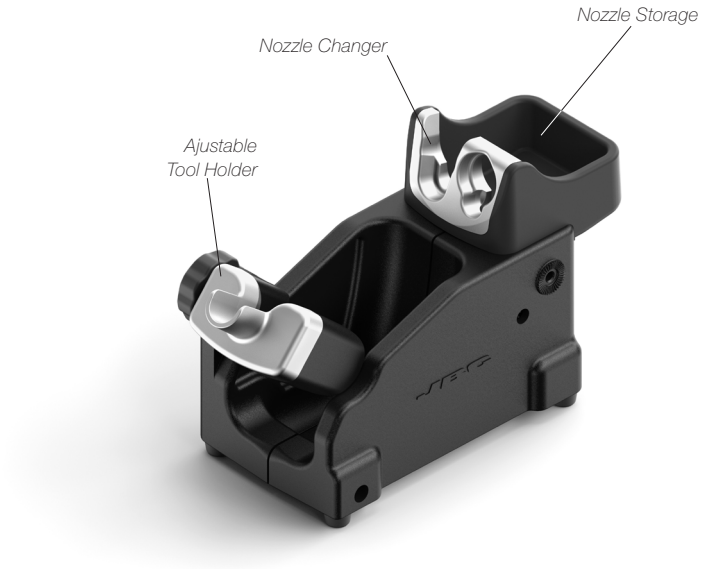

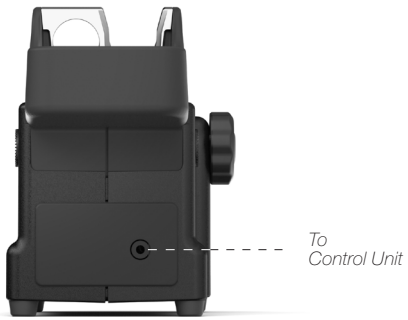

Assembly

Adjust the tool holder angle to suit your work position.

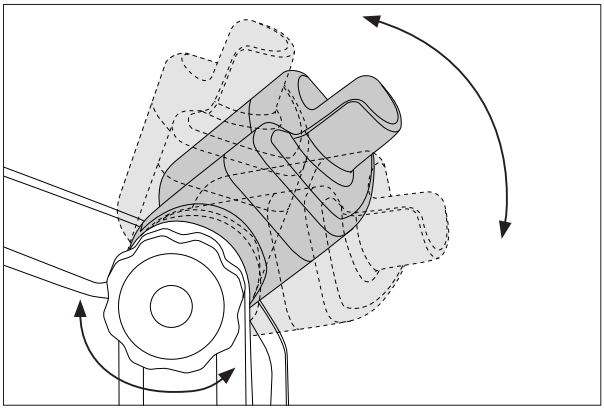

Nozzle Extractor

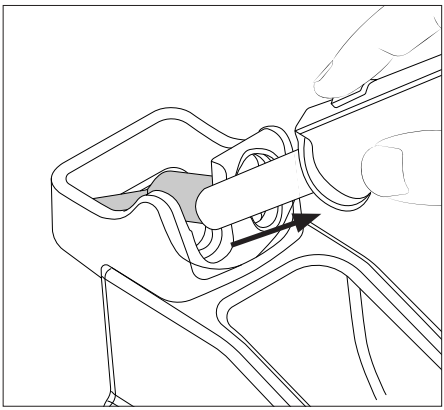

Place the heating element with the assembled nozzle in the nozzle changer and pull the tool to remove the nozzle.
The nozzle comes to rest in the nozzle storage.

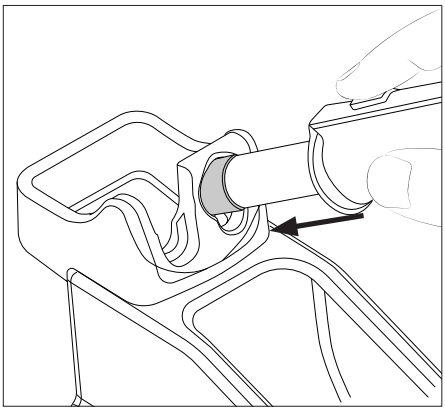

Attach the nozzle and press the nozzle onto the heating element with the help of the opening in the nozzle changer.

Maintenance

Before carrying out maintenance or storage, always unplug the stand from the station

- Use a damp cloth to clean the stand. Alcohol can be used only when cleaning the metal parts.

- Check periodically that the metal parts of the tool/stand are clean so that the station can check the tool's status.

- Periodically check all cables.

- Replace any defective or damaged parts. Use original JBC spare parts only.

- Repairs should only be performed by a JBC authorized technical service.

Safety

It is imperative to follow safety guidelines to prevent electric shock, injury, fire or explosion.

- Do not use the stands for any purpose other than soldering or rework.

- The power cord must be plugged into approved bases. Be sure that it is properly grounded before use. When unplugging it, hold the plug, not the wire.

- Do not work on electrically live parts.

- The tool should be placed in the stand when not in use in order to activate the sleep mode. The soldering tip, the metal part of the tool and the stand may still be hot even when the station is turned off. Handle with care, including when adjusting the stand position.

- Avoid the contact of flux with skin or eyes to prevent irritation.

- Be careful with the fumes produced when soldering.

- Keep your workplace clean and tidy. Wear appropriate protection glasses and gloves when working to avoid personal harm.

- Utmost care must be taken with liquid tin waste which can cause burns.

- This appliance can be used by children over the age of eight and also persons with reduced physical, sensory or mental capabilities or lack of experience provided that they have been given adequate supervision or instruction concerning use of the appliance and understand the hazards involved. Children must not play with the appliance.

- Maintenance must not be carried out by children unless supervised.

Notes

Specifications

TES
Stand for TE Precision Heater Hose Set
Ref.: **TE-SE**

- Includes	Nozzle extractor
- Total Net Weight	1203 g / 2.65 lb
- Package Dimensions / Weight:	1449 g / 3.19 lb
(L x W x H)	342 x 155 x 120 mm / 13.46 x 6.10 x 4.72 in

JTS
Stand for JT Heater Hose Set
Ref.: **JT-SE**

- Includes	Nozzle extractor
- Total Net Weight	1234 g / 2.72 lb
- Package Dimensions / Weight:	1515 g / 3.34 lb
(L x W x H)	342 x 155 x 120 mm / 13.46 x 6.10 x 4.72 in

Complies with CE standards
ESD safe

Warranty
JBC's 2 year warranty covers this equipment against all manufacturing defects, including the replacement of defective parts and labour.
Warranty does not cover product wear or misuse.
In order for the warranty to be valid, equipment must be returned, postage paid, to the dealer where it was purchased.

This product should not be thrown in the garbage.
In accordance with the European directive 2012/19/EU, electronic equipment at the end of its life must be collected and returned to an authorized recycling facility.

www.jbctools.com

0027184-130522