BRIGHTEK
BRIGHTEK (EUROPE) LIMITED
Brighten Up The World With LED!

ISO/TS 16949:2009 | BS EN ISO 14001:2004 | QC 080000 IECQ HSPM

# PRODUCT DATASHEET

ATTENTION
OBSERVE PRECAUTIONS FOR HANDLING ELECTROSTATIC SENSITIVE DEVICES

- ▶ DC Input Photo Coupler
- ▶ SOP4
- ▶ Zero-Cross TRIAC

Release Date: 20 July 2025 Version: A00

# TDM308X(T1)-GV

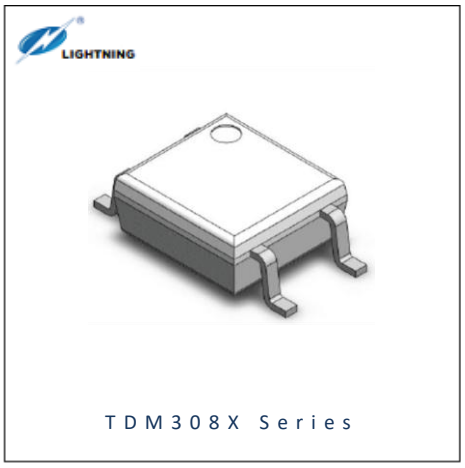


## TDM308X Series

RoHS Compliant

### DESCRIPTION:

The TDM308X series combine an AlGaAs infrared emitting diode as the emitter which is optically coupled to a mono-lithic silicon zero-cross photo TRIAC in a plastic SOP4 package.

With the robust coplanar double mold structure, TDM308X series provide the most stable isolation feature.

### FEATURES:

- High isolation 3750Vrms
- DC input with zero-cross photo TRIAC output
- Operating temperature range -40°C to +100°C
- REACH & RoHS compliance; Halogen free
- MSL class 1
- Regulatory Approvals:
  - UL - UL1577
  - VDE - EN60747-5-5 (VDE0884-5)
  - CQC - GB4943.1, GB8898
  - cUL - CSA Component Acceptance Service Notice 5A
- Packing: 3000pcs/tube

### APPLICATIONS:

- Solenoid/valve controls
- Lighting controls
- Motor controls
- Temperature controls
- Static AC power switches
- Solid state relays
- Interfacing microprocessors to 115 to 240VAC peripherals

Partner with: LIGHTNING


Copyright © 2007-2025 Brightek (Europe) Limited. All rights reserved.
The information in this document is subject to change without notice.


sales@prom-elec.com / ООО ПРОМЭЛЕКТРОНИКА

## NAMING & ORDERING INFORMATION:

Naming Information:

| TDM308 X (T1) - G V | |
|---|---|
| TDM308 | Part Number |
| X | Selection: LED Trigger Current (X=1~3) |
| T1 | Selection: Tape and Reel Option (T1(default)/T2) |
| G | Green Option |
| V | VDE Option |

Ordering Information:

**TDM308X(T1)-GV**

X = Selection: LED Trigger Current (X=1~3)

| Part Number | Symbol | Values | | | Unit | Test Condition |
|---|---|---|---|---|---|---|
| | | Min. | Typ. | Max. | | |
| TDM3081(T1)-GV | $I_{FT}$ | --- | --- | 15 | mA | $I_{TM}$=100mA Terminal Voltage=3V |
| TDM3082(T1)-GV | | --- | --- | 10 | | |
| TDM3083(T1)-GV | | --- | --- | 5 | | |

| Version No. | Original Release Date |
|---|---|
| Rev: A00 | 05/09/2024 |


Copyright © 2007-2025 Brightek (Europe) Limited. All rights reserved.
The information in this document is subject to change without notice.

## SCHEMATIC DIAGRAM & MARKING:

Schematic Diagram:

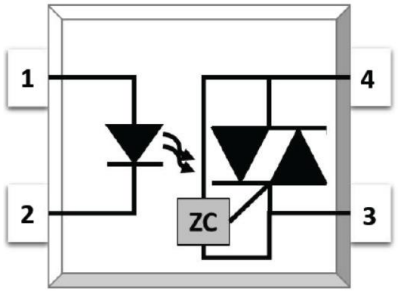


| PIN Definition | |
|---|---|
| 1 | Anode |
| 2 | Cathode |
| 3 | Terminal |
| 4 | Terminal |

Marking Information:

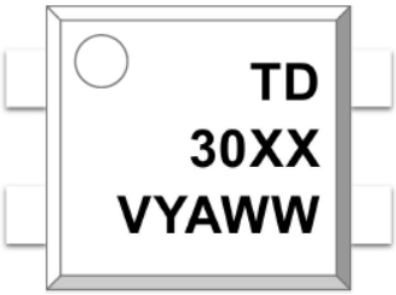


| Marking Definition | |
|---|---|
| TD | Manufacturer Code |
| 308X | Part Number & Rank |
| V | VDE Applicable |
| Y | Fiscal Year |
| A | Manufacturing Code |
| WW | Work Week |

Labelling Information:

This product is manufactured by

LIGHTNING

for Brightek (Europe) Limited


Copyright © 2007-2025 Brightek (Europe) Limited. All rights reserved.
The information in this document is subject to change without notice.

## ABSOLUTE CHARACTERISTICS:

Absolute Maximum Ratings:

| Parameter | Symbol | Ratings | Unit |
|---|---|---|---|
| INPUT | | | |
| Forward Current | $I_F$ | 60 | mA |
| Reverse Voltage | $V_R$ | 6 | V |
| Junction Temperature | $T_j$ | 125 | ˚C |
| Input Power Dissipation | $P_I$ | 100 | mW |
| OUTPUT | | | |
| Off-State Output Terminal Voltage | $V_{DRM}$ | 800 | V |
| Peak Repetitive Surge Current PW=100µs, 120pps | $I_{TSM}$ | 1 | A |
| On-State RMS Current | $I_{T(RMS)}$ | 100 | mA |
| Junction Temperature | $T_j$ | 125 | ˚C |
| Output Power Dissipation | $P_O$ | 300 | mW |
| COMMON | | | |
| Total Power Dissipation | $P_{tot}$ | 400 | mW |
| Isolation Voltage | $V_{iso}$ | 3750 *1 | Vrms |
| Operating Temperature | $T_{opr}$ | -40~+100 | ˚C |
| Storage Temperature | $T_{stg}$ | -55~+125 | ˚C |
| Soldering Temperature | $T_{sol}$ | 260 *2 | ˚C |

*1. AC for 1 minute, R.H.=40~60%.
*2. For 10 seconds max.


Copyright © 2007-2025 Brightek (Europe) Limited. All rights reserved.
The information in this document is subject to change without notice.

## ELECTRICAL CHARACTERISTICS:

Electrical Optical Characteristics at $T_a$=25°C:

| Parameter | | Symbol | Values | | | Unit | Test Condition |
|---|---|---|---|---|---|---|---|
| | | | Min. | Typ. | Max. | | |
| INPUT | | | | | | | |
| Forward Voltage | | $V_F$ | --- | 1.24 | 1.4 | V | $I_F$=10mA |
| Reverse Current | | $I_R$ | --- | --- | 10 | µA | $V_R$=6V |
| Input Capacitance | | $C_{IN}$ | --- | 8.5 | 250 | pF | V=0, f=1kHz |
| OUTPUT | | | | | | | |
| Peak Off-State Current Either Direction | | $I_{DRM}$ | --- | --- | 500 *1 | nA | $V_{DRM}$=Rated $V_{DRM}$ $I_F$=0 |
| Peak On-State Voltage Either Direction | | $V_{TM}$ | --- | 1.42 | 2.5 | V | $I_{TM}$=100mA |
| Critical Rate of Rise of Off-State Voltage | | dV/dt | 1000 | --- | --- | V/µs | $V_{PEAK}$=400V $I_F$ =0 |
| TRANSFER CHARACTERISTICS | | | | | | | |
| LED Trigger Current | TD3081-4L | $I_{FT}$ | --- | --- | 15 | mA | $I_{TM}$=100mA Terminal Voltage=3V |
| | TD3082-4L | | --- | --- | 10 | | |
| | TD3083-4L | | --- | --- | 5 | | |
| Holding Current | | $I_H$ | --- | 450 | --- | µA | --- |
| Isolation Resistance | | $R_{ISO}$ | 10^12 | 10^14 | --- | Ω | DC=500V, 40~60% R.H. |
| Floating Capacitance | | $C_{IO}$ | --- | 0.4 | 1 | pF | V=0, f=1MHz |
| ZERO-CROSSING CHARACTERISTICS | | | | | | | |
| Inhibit Voltage | | $V_{INH}$ | --- | --- | 20 | V | $I_F$=Rated $I_{FT}$ |
| Leakage in Inhibited State | | $I_{DRM2}$ | --- | --- | 500 | µA | $I_F$=Rated $I_{FT}$ $V_{DRM}$=Rated $V_{DRM}$ |

*1. Test voltage must be applied within dV/dt rating.


Copyright © 2007-2025 Brightek (Europe) Limited. All rights reserved.
The information in this document is subject to change without notice.

## CHARACTERISTIC CURVES:

| Forward Current v.s. Ambient Temperature | On-State Terminal Current v.s. Ambient Temperature |
|---|---|
| 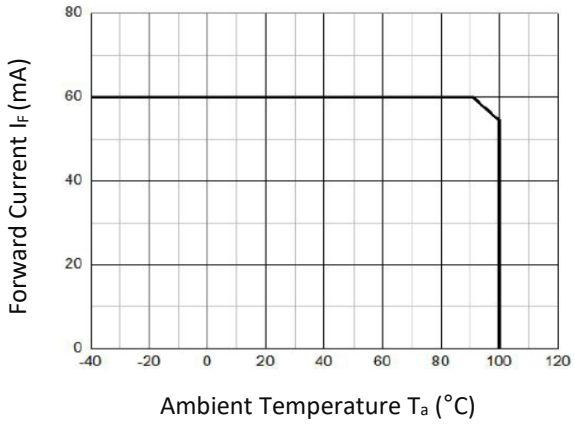 | 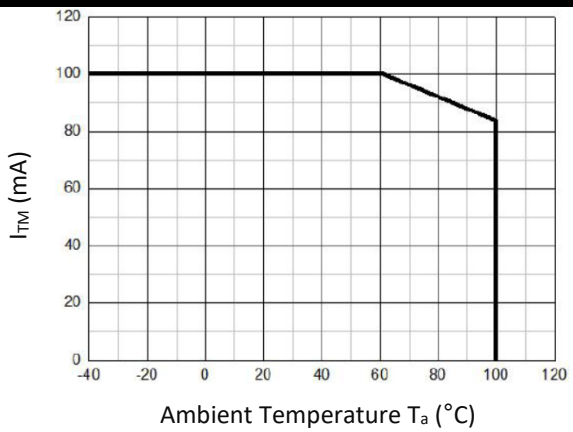 |



| Forward Current v.s. Forward Voltage | Off-State Terminal Current v.s. Ambient Temperature |
|---|---|
| 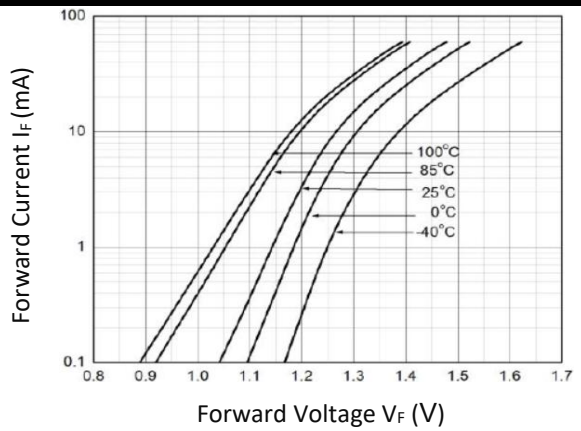 | 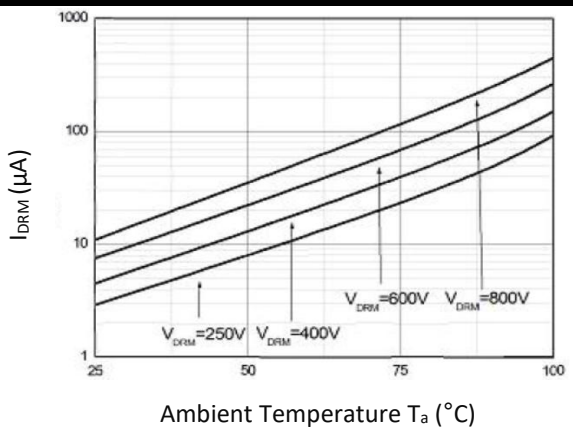 |



| Normalized Off-State Terminal Voltage v.s. Ambient Temperature | Normalized Trigger Current v.s. LED Trigger Pulse Width |
|---|---|
| 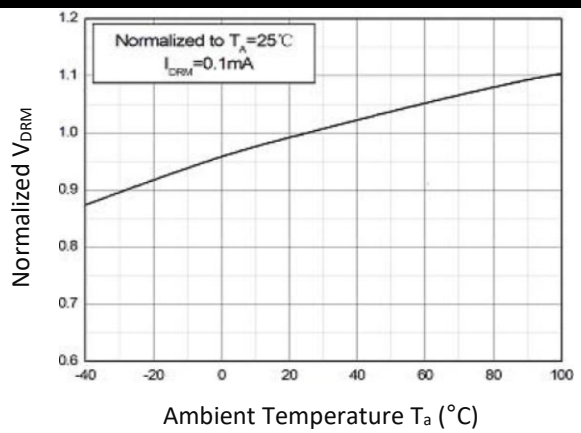 | 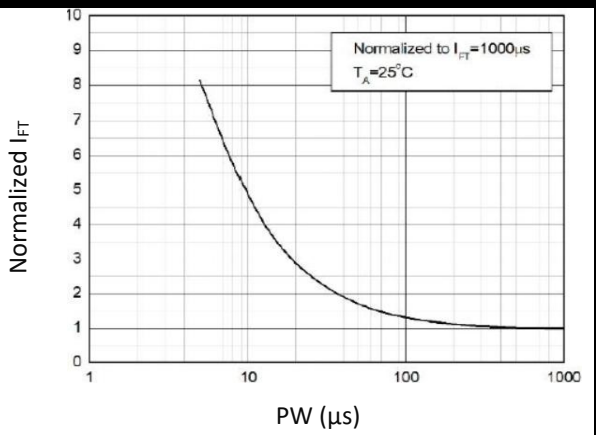 |




Copyright © 2007-2025 Brightek (Europe) Limited. All rights reserved.
The information in this document is subject to change without notice.

## CHARACTERISTIC CURVES:

| Normalized Trigger Current v.s. Ambient Temperature | On-State Terminal Voltage v.s. Ambient Temperature |
|---|---|
| 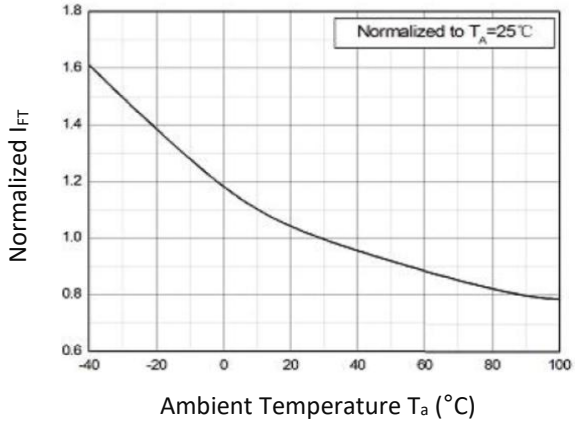 | 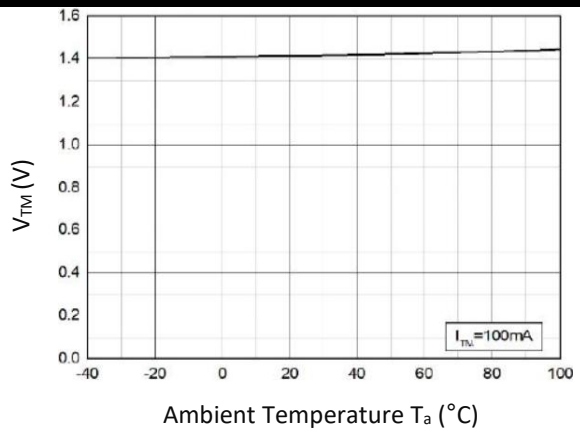 |



| On-State Terminal Voltage v.s. On-State Terminal Current | Holding Current v.s. Ambient Temperature |
|---|---|
| 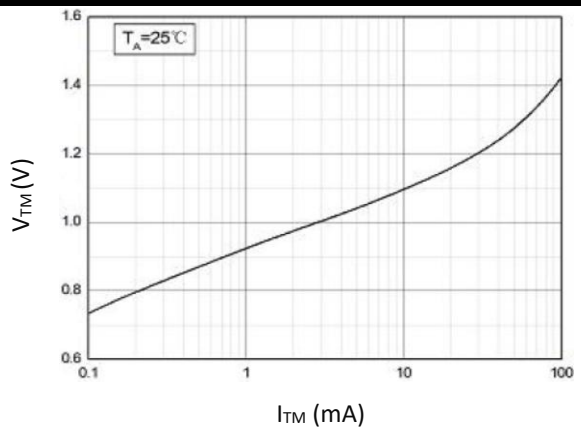 | 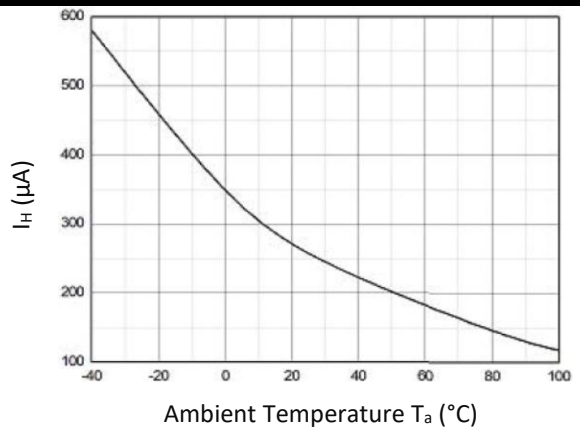 |



| Normalized Inhibit Voltage v.s. Ambient Temperature | Normalized Leakage in Inhibit State v.s. Ambient Temperature |
|---|---|
| 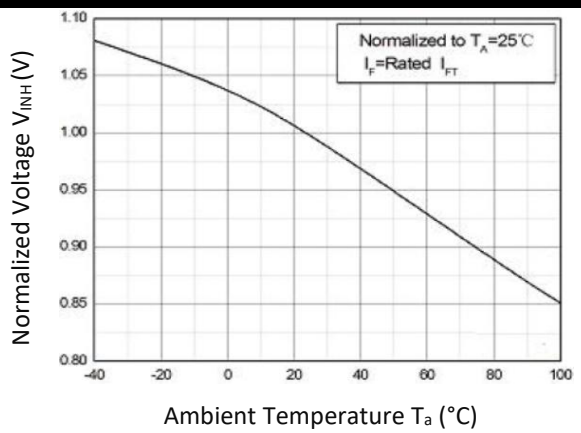 | 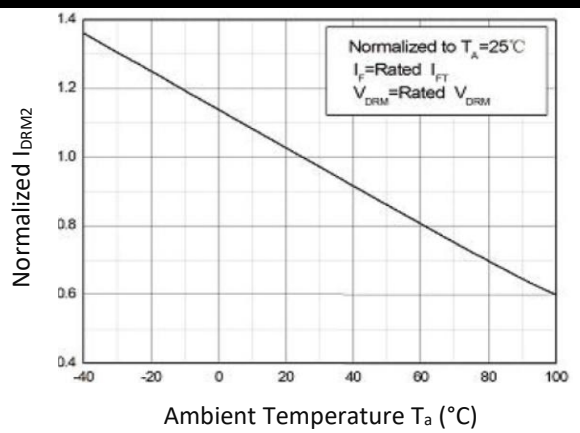 |




Copyright © 2007-2025 Brightek (Europe) Limited. All rights reserved.
The information in this document is subject to change without notice.

## CHARACTERISTIC CURVES:

| Turn On Time v.s. Forward Current | Turn On Time v.s. Ambient Temperature |
|---|---|
| 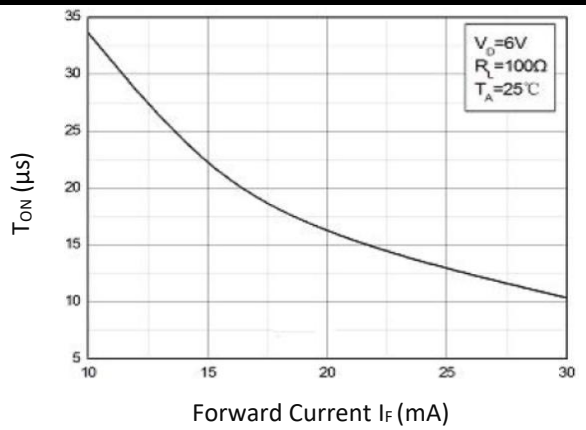  | 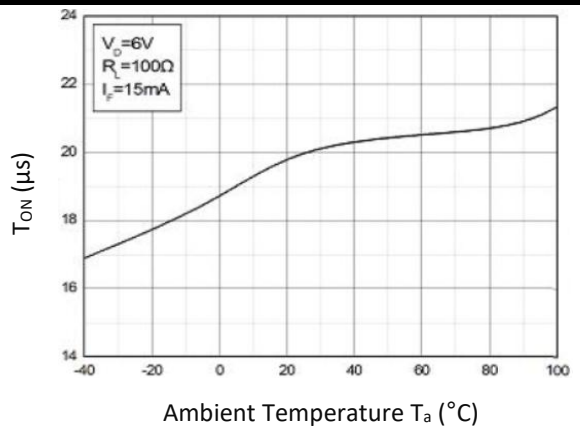  |


Copyright © 2007-2025 Brightek (Europe) Limited. All rights reserved.
The information in this document is subject to change without notice.

## TEST CIRCUIT:

Test Circuit and Waveforms of Turn On Time:

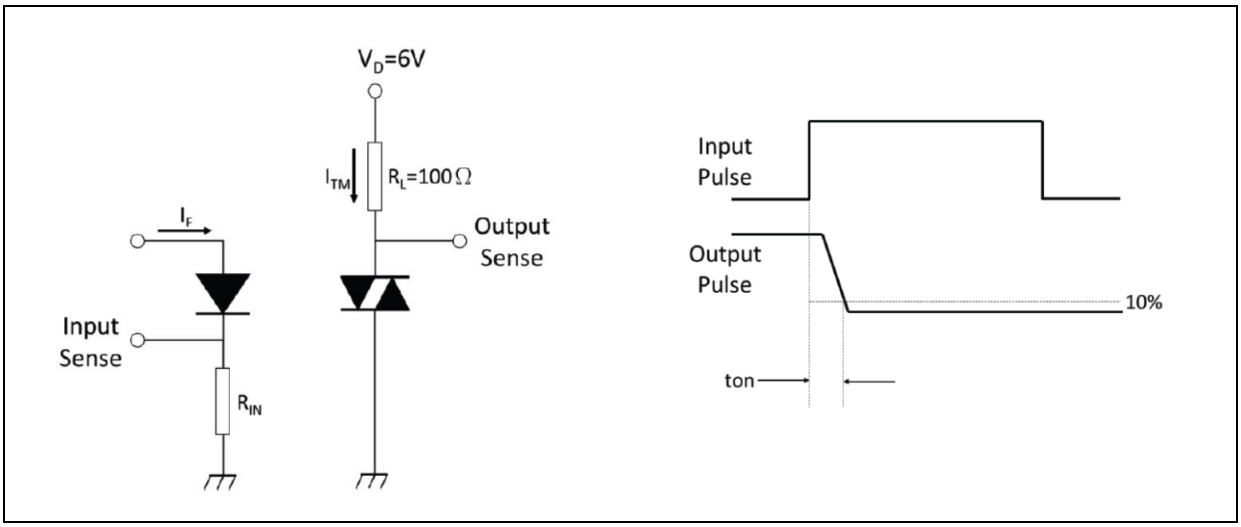


Test Circuit and Waveforms of dV/dt:

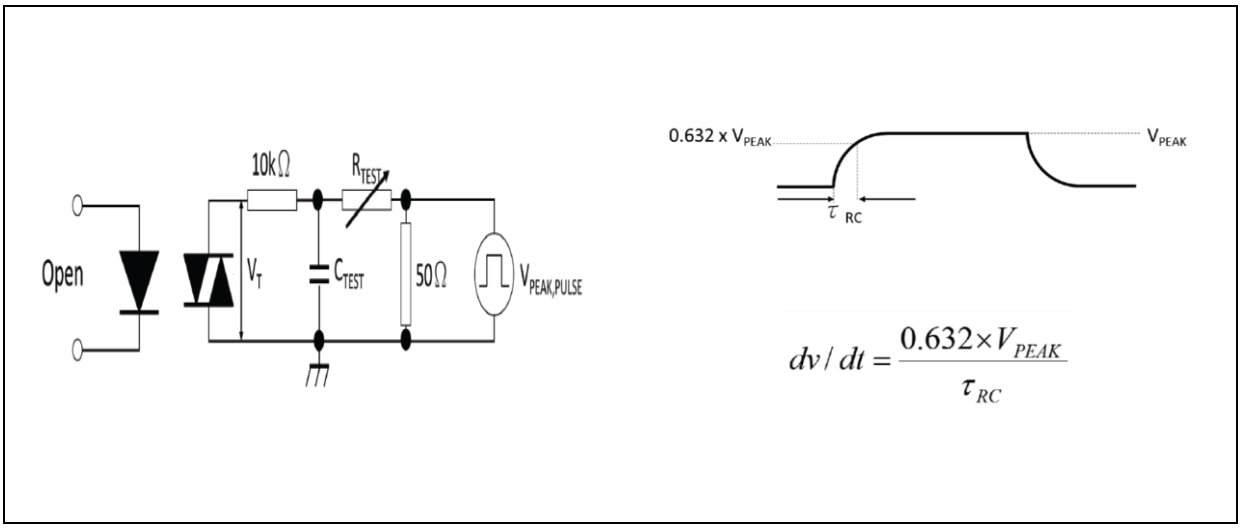


$$dv/dt = \frac{0.632 \times V_{PEAK}}{\tau_{RC}}$$


Copyright © 2007-2025 Brightek (Europe) Limited. All rights reserved.
The information in this document is subject to change without notice.

## OUTLINE DIMENSION:

Package Dimension:

Surface Mount Lead Forming - SOP4

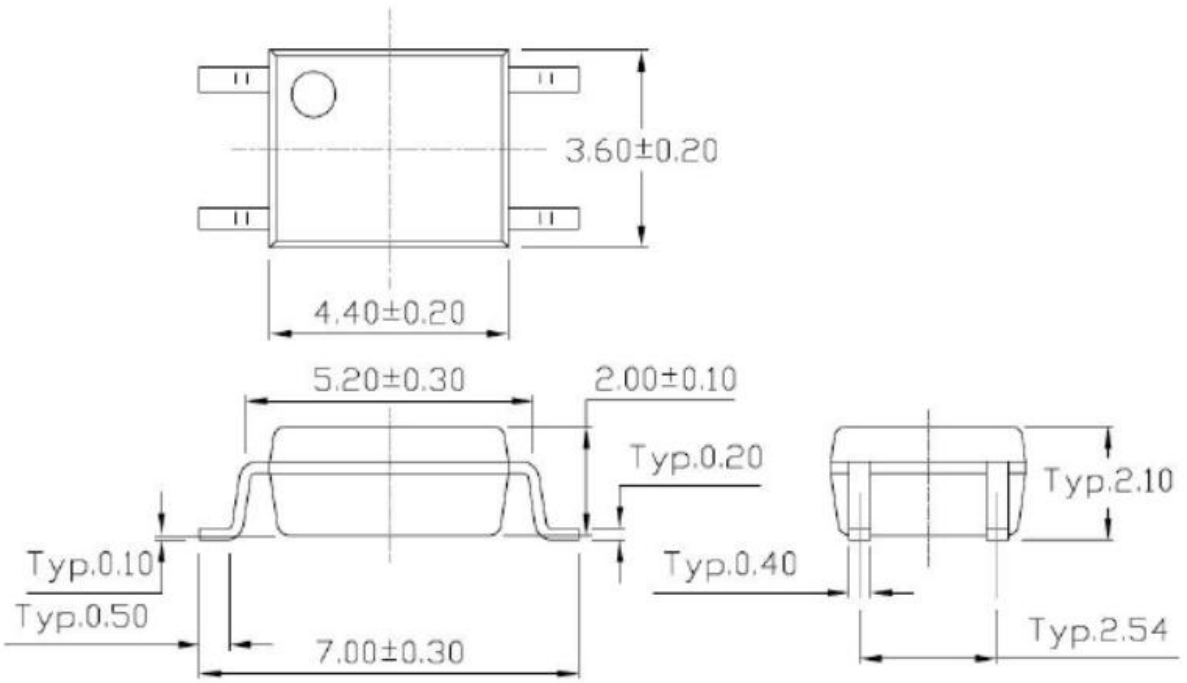


1. All dimensions are in millimetre (mm).

Recommended Soldering Mask:

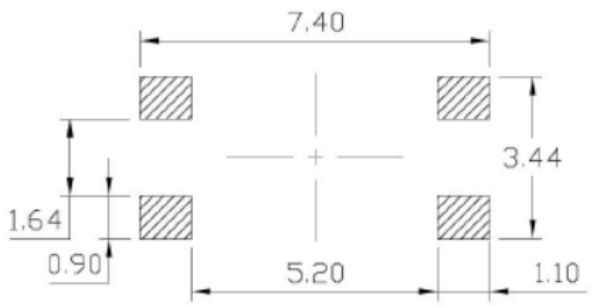


1. Dimensions are in millimetre (mm).


Copyright © 2007-2025 Brightek (Europe) Limited. All rights reserved.
The information in this document is subject to change without notice.

## PACKING SPECIFICATION:

Reel Dimension:

T1(default)/T2: 3000pcs/reel

Reel Option: T1(default)

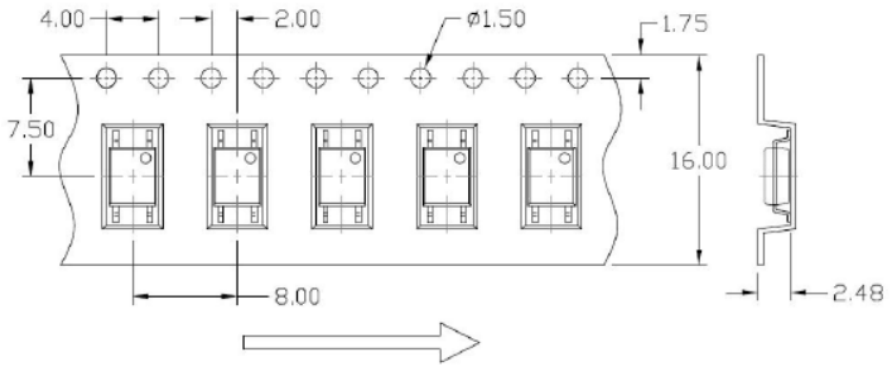


Reel Option: T2

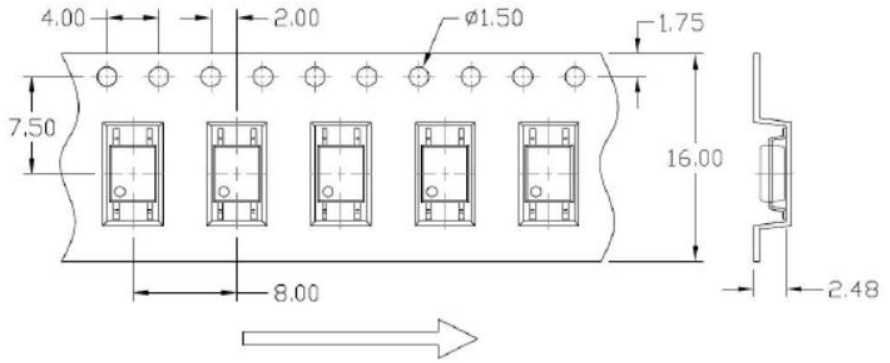


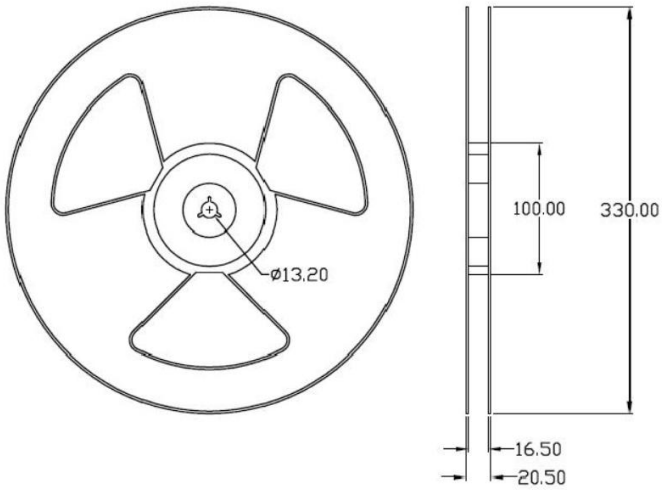



Copyright © 2007-2025 Brightek (Europe) Limited. All rights reserved.
The information in this document is subject to change without notice.

## PACKING SPECIFICATION:

Box Dimension:

T1/T2: 3 reels (9Kpcs)/inner box, 5 inner boxes (45Kpcs)/carton

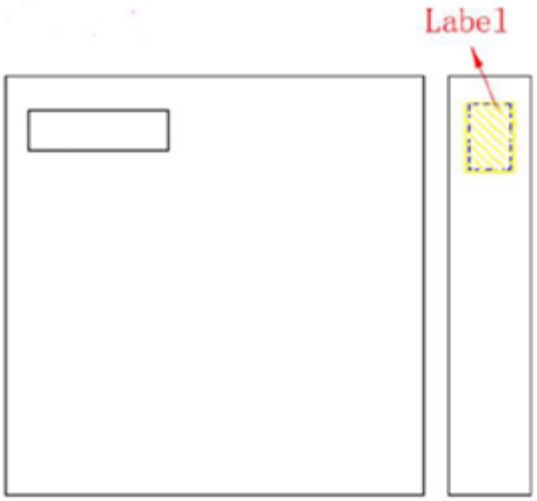


- L x W x H = 36cm x 36cm x 6.9cm

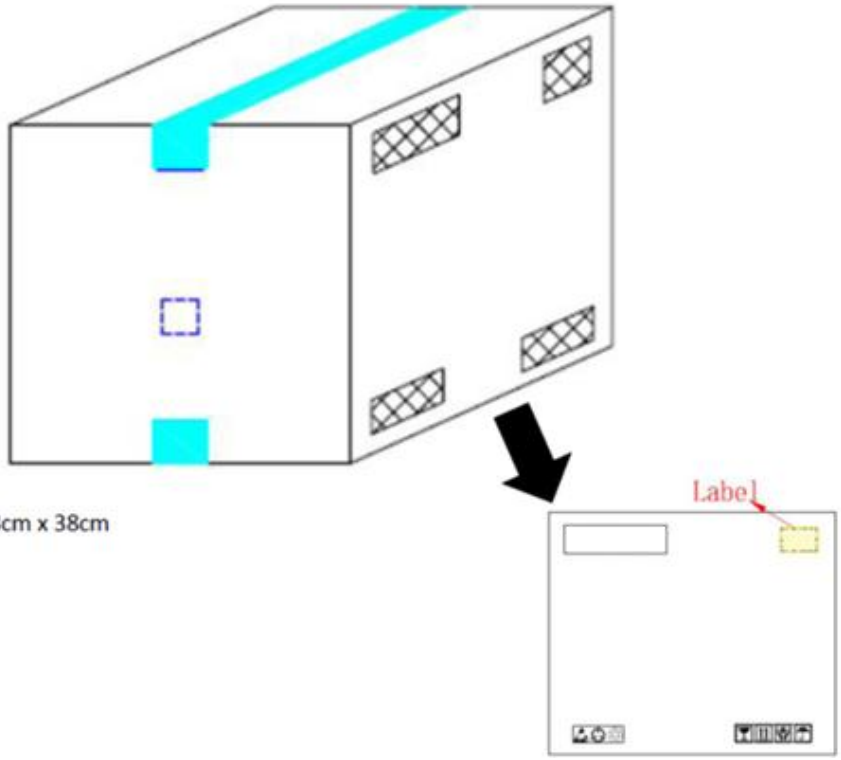


- L x W x H = 45cm x 38cm x 38cm


Copyright © 2007-2025 Brightek (Europe) Limited. All rights reserved.
The information in this document is subject to change without notice.

## RECOMMENDED SOLDERING PROFILE:

Reflow Information:

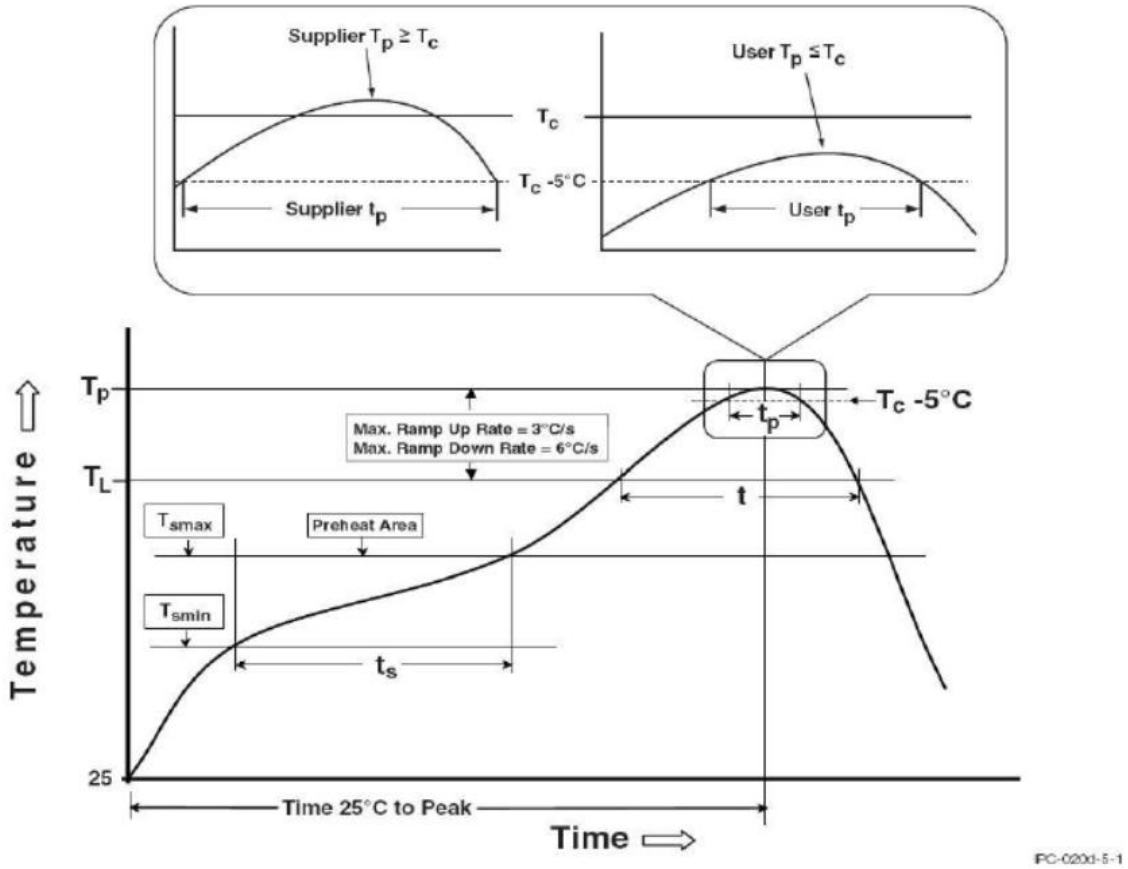


| Profile Feature | Sn-Pb Assembly Profile | Pb-Free Assembly Profile |
|---|---|---|
| Temperature Min. ($T_{smin}$) | 100°C | 150°C |
| Temperature Max. ($T_{smax}$) | 150°C | 200°C |
| Time ($t_s$) from ($T_{smin}$ to $T_{smax}$) | 60-120 seconds | 60-120 seconds |
| Ramp-up Rate ($t_L$ to $t_P$) | 3°C/second max. | 3°C/second max. |
| Liquidous Temperature ($T_L$) | 183°C | 217°C |
| Time ($t_L$) Maintained Above ($T_L$) | 60-150 seconds | 60-150 seconds |
| Peak Body Package Temperature | 235°C +0°C / -5°C | 260°C +0°C / -5°C |
| Time ($t_P$) within 5°C of 260°C | 20 seconds | 30 seconds |
| Ramp-down Rate ($T_P$ to $T_L$) | 6°C/second max. | 6°C/second max. |
| Time 25°C to Peak Temperature | 6 minutes max. | 8 minutes max. |


Copyright © 2007-2025 Brightek (Europe) Limited. All rights reserved.
The information in this document is subject to change without notice.