Silicon NPN Phototransistor

Description

BPV11 is a very high sensitive silicon NPN epitaxial planar phototransistor in a standard T–1¾ plastic package.
Due to its waterclear epoxy lens the device is sensitive to visible and near infrared radiation.
The viewing angle of ±15° makes it insensible to ambient straylight.
A base terminal is available to enable biasing and sensitivity control.

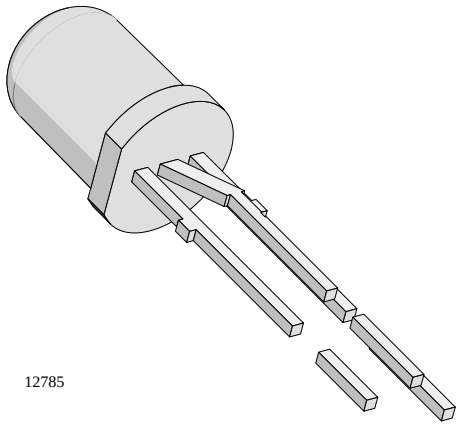

Features

- Very high photo sensitivity
- Standard T–1¾ (ø 5 mm) package with clear lens
- Angle of half sensitivity φ = ± 15°
- Base terminal available

Applications

Detector for industrial electronic circuitry, measurement and control

Absolute Maximum Ratings

T_{amb} = 25°C

Parameter	Test Conditions	Symbol	Value	Unit
Collector Base Voltage		V_{CBO}	80	V
Collector Emitter Voltage		V_{CEO}	70	V
Emitter Base Voltage		V_{EBO}	5	V
Collector Current		I_C	50	mA
Peak Collector Current	$t_p/T = 0.5$, $t_p \leqq 10$ ms	I_{CM}	100	mA
Total Power Dissipation	$T_{amb} \leqq 47$ °C	P_{tot}	150	mW
Junction Temperature		T_j	100	°C
Storage Temperature Range		T_{stg}	–55...+100	°C
Soldering Temperature	$t \leqq 5$ s, 2 mm from body	T_{sd}	260	°C
Thermal Resistance Junction/Ambient		R_{thJA}	350	K/W

sales@prom-elec.com / ООО ПРОМЭЛЕКТРОНИКА

Basic Characteristics

T_{amb} = 25°C

Parameter	Test Conditions	Symbol	Min	Typ	Max	Unit
Collector Emitter Breakdown Voltage	I_C = 1 mA	$V_{(BR)CEO}$	70			V
Collector Dark Current	V_{CE} = 10 V, E = 0	I_{CEO}		1	50	nA
DC Current Gain	V_{CE} = 5 V, I_C = 5 mA, E = 0	h_{FE}		450		
Collector Emitter Capacitance	V_{CE} = 0 V, f = 1 MHz, E=0	C_{CEO}		15		pF
Collector Base Capacitance	V_{CB} = 0 V, f = 1 MHz, E=0	C_{CBO}		19		pF
Collector Light Current	E_e=1 mW/cm^2, λ=950 nm, V_{CE}=5 V	I_{ca}	3	10		mA
Angle of Half Sensitivity		φ		±15		deg
Wavelength of Peak Sensitivity		λ_p		850		nm
Range of Spectral Bandwidth		$\lambda_{0.5}$		620...980		nm
Collector Emitter Saturation Voltage	E_e=1 mW/cm^2, λ=950 nm, I_C=1 mA	V_{CEsat}		130	300	mV
Turn–On Time	V_S=5 V, I_C=5 mA, R_L=100 Ω	t_{on}		6		µs
Turn–Off Time	V_S=5 V, I_C=5 mA, R_L=100 Ω	t_{off}		5		µs
Cut–Off Frequency	V_S=5 V, I_C=5 mA, R_L=100 Ω	f_c		110		kHz

Typical Characteristics (T$_{amb}$ = 25°C unless otherwise specified)

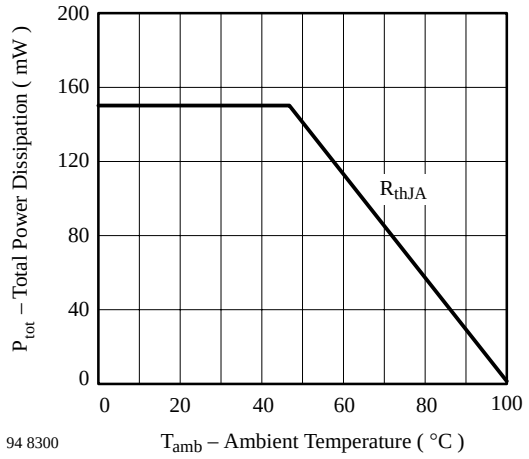

Figure 1. Total Power Dissipation vs. Ambient Temperature

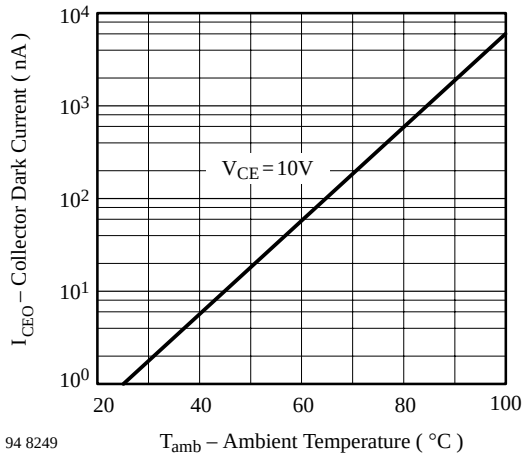

Figure 2. Collector Dark Current vs. Ambient Temperature

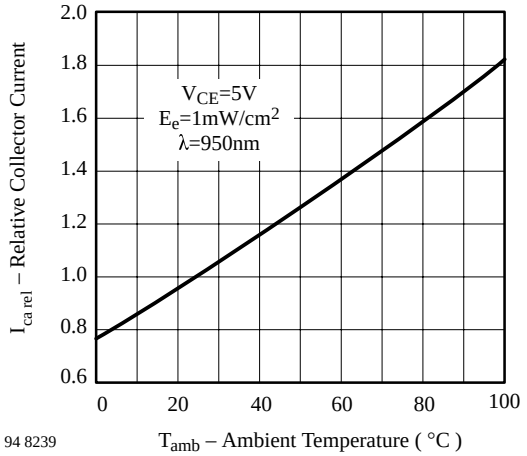

Figure 3. Relative Collector Current vs. Ambient Temperature

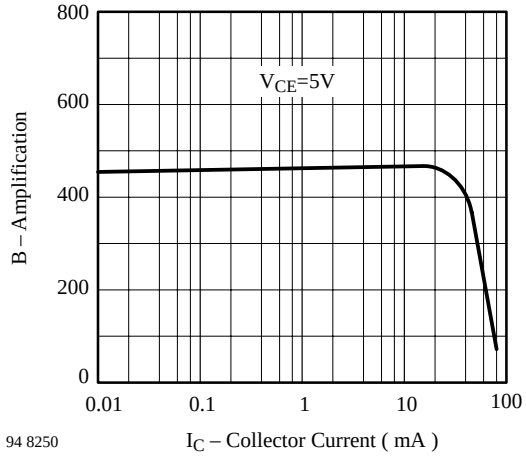

Figure 6. Amplification vs. Collector Current

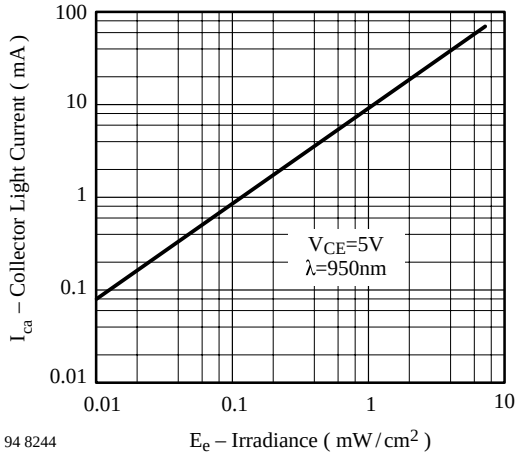

Figure 4. Collector Light Current vs. Irradiance

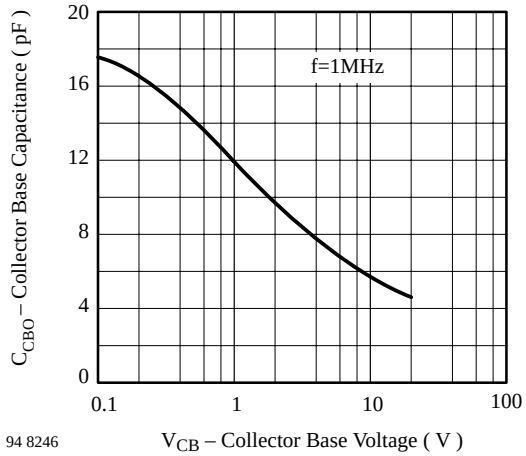

Figure 7. Collector Base Capacitance vs. Collector Base Voltage

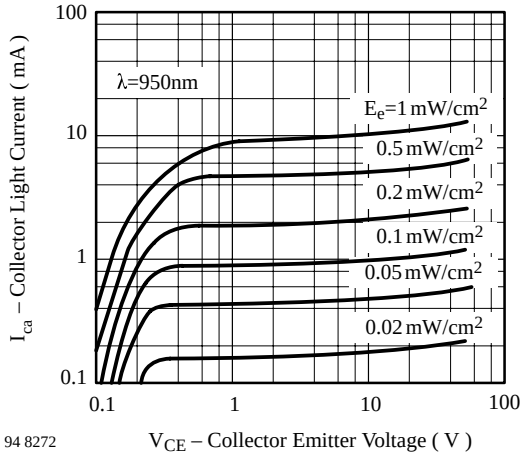

Figure 5. Collector Light Current vs. Collector Emitter Voltage

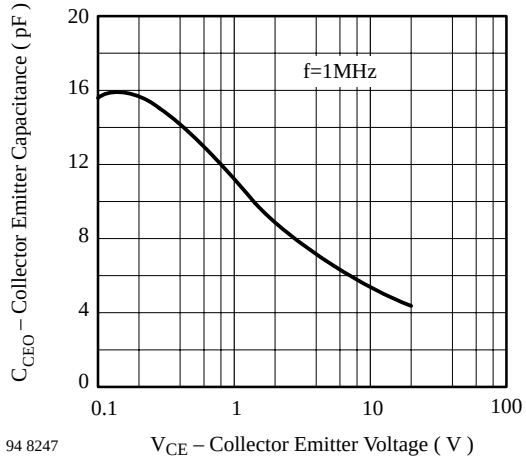

Figure 8. Collector Emitter Capacitance vs. Collector Emitter Voltage

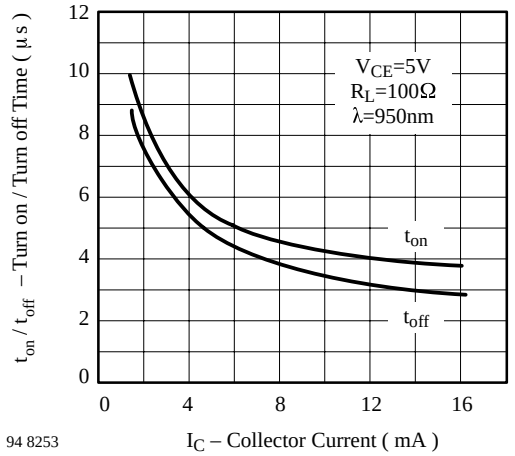

Figure 9. Turn On/Turn Off Time vs. Collector Current

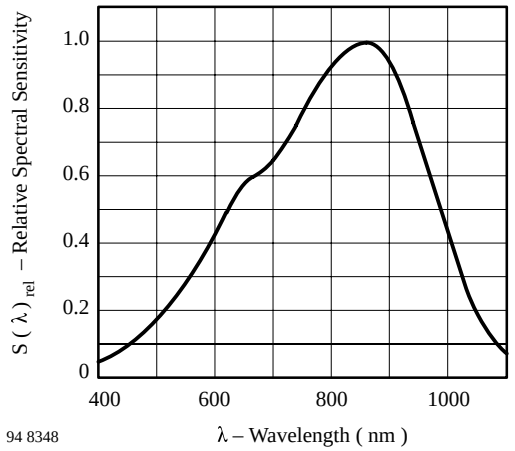

Figure 10. Relative Spectral Sensitivity vs. Wavelength

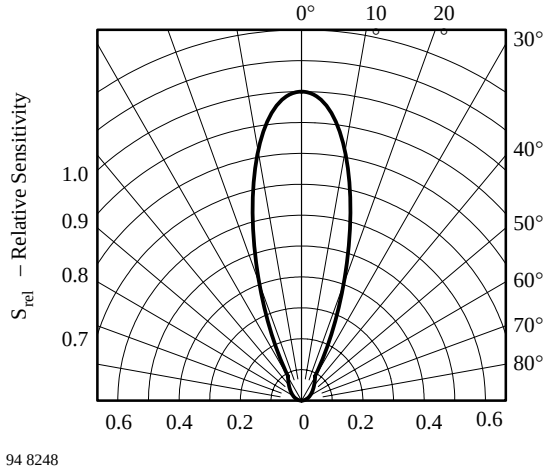

Figure 11. Relative Radiant Sensitivity vs. Angular Displacement

Dimensions in mm

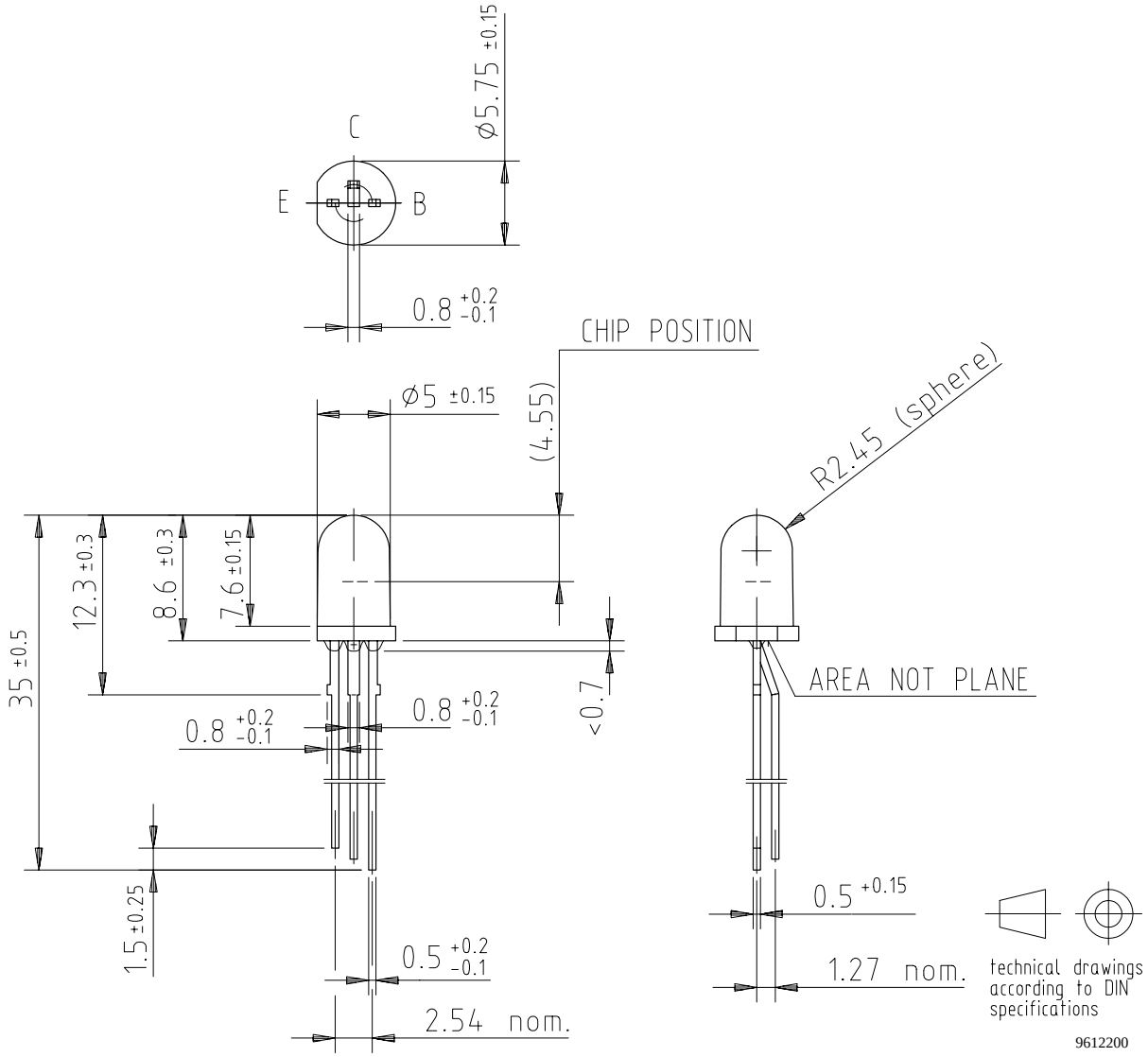

Ozone Depleting Substances Policy Statement

It is the policy of **Vishay Semiconductor GmbH** to

1. Meet all present and future national and international statutory requirements.

2. Regularly and continuously improve the performance of our products, processes, distribution and operating systems with respect to their impact on the health and safety of our employees and the public, as well as their impact on the environment.

It is particular concern to control or eliminate releases of those substances into the atmosphere which are known as ozone depleting substances (ODSs).

The Montreal Protocol (1987) and its London Amendments (1990) intend to severely restrict the use of ODSs and forbid their use within the next ten years. Various national and international initiatives are pressing for an earlier ban on these substances.

Vishay Semiconductor GmbH has been able to use its policy of continuous improvements to eliminate the use of ODSs listed in the following documents.

1. Annex A, B and list of transitional substances of the Montreal Protocol and the London Amendments respectively

2. Class I and II ozone depleting substances in the Clean Air Act Amendments of 1990 by the Environmental Protection Agency (EPA) in the USA

3. Council Decision 88/540/EEC and 91/690/EEC Annex A, B and C (transitional substances) respectively.

Vishay Semiconductor GmbH can certify that our semiconductors are not manufactured with ozone depleting substances and do not contain such substances.

We reserve the right to make changes to improve technical design and may do so without further notice.
Parameters can vary in different applications. All operating parameters must be validated for each customer application by the customer. Should the buyer use Vishay-Telefunken products for any unintended or unauthorized application, the buyer shall indemnify Vishay-Telefunken against all claims, costs, damages, and expenses, arising out of, directly or indirectly, any claim of personal damage, injury or death associated with such unintended or unauthorized use.

Vishay Semiconductor GmbH, P.O.B. 3535, D-74025 Heilbronn, Germany
Telephone: 49 (0)7131 67 2831, Fax number: 49 (0)7131 67 2423