ProLight Opto Technology Corporation

RoHS | Pb Free | IR Reflow

ProLight PBSD-20JLA-Ux
20W UV Power LED
Technical Datasheet
Version: 1.0

Prolight Opto ® ProEngine Series

Features

- High Efficacy 20W UV LED
- Dimension: 7 mm(L) x 7mm(W)
- RoHS compliant

Main Applications

- UV gluing, UV curing, UV marking
- UV drying of printing inks and lacquers
- Currency inspection
- Forensic analysis-urine, protein stains
- Leak detection using fluorescent dyes
- Detects fluorescing minerals and gems

Introduction

·The PBSD-20JLA product series is a compact, high quality and reliable 4-chip UV LED. Featuring high radiometric power density and design flexibility.

No. 89, Xiyuan Rd., Zhongli City, Taoyuan County 320,
Taiwan (R.O.C.)
Tel ：+886-3-461-8618
Fax ：+886-3-461-8677
www.prolightopto.com

2020/10
DS-1493

We Provide the Light to the world

sales@prom-elec.com / ООО ПРОМЭЛЕКТРОНИКА

Emitter Mechanical Dimensions

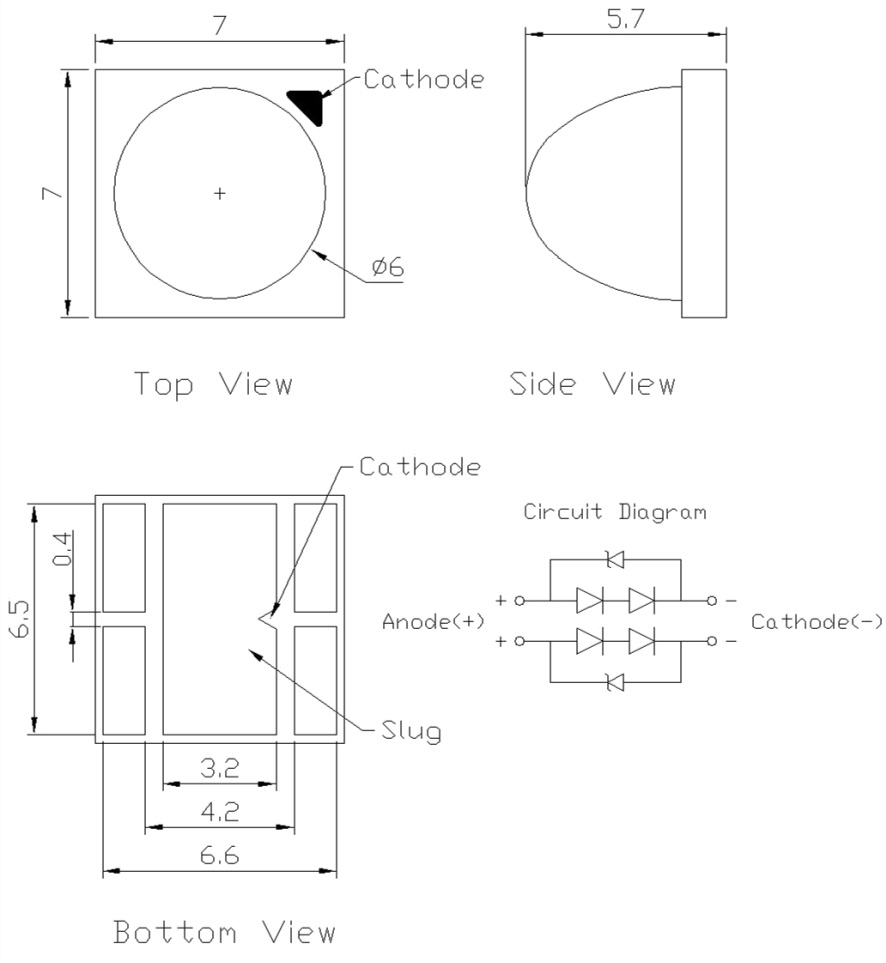

Notes:
1. Drawing not to scale.
2. All dimensions are in millimeters.
3. Unless otherwise indicated, tolerances are ± 0.15mm.
4. Please do not solder the emitter by manual hand soldering, otherwise it will damage the emitter.
5. **Please do not use a force of over 3kgf impact or pressure on the lens of the LED, otherwise it will cause a catastrophic failure.**

*The appearance and specifications of the product may be modified for improvement without notice.

No. 89, Xiyuan Rd., Zhongli City, Taoyuan County 320,
Taiwan (R.O.C.)
Tel ：+886-3-461-8618
Fax ：+886-3-461-8677
www.prolightopto.com

Flux Characteristics, T_J = 25°C

Radiation Pattern	Color	Part Number Emitter	Radiometric Power (mW) @1000mA Minimum	@1000mA Typical	Refer @2000mA Typical	Refer @3000mA Typical
Lambertian	UV-S	PBSD-20JLA-US	2000	2900	5400	-
	UV-M	PBSD-20JLA-UM	2000	3610	-	9930
	UV	PBSD-20JLA-U	2000	3610	-	9930
	UV-L	PBSD-20JLA-UL	2000	3610	-	9930

- ProLight maintains a tolerance of ± 7% on flux and power measurements.
- Please do not drive at rated current more than 1 second without proper heat sink.

Electrical Characteristics, T_J = 25°C

Color	Forward Voltage V_F (V) @1000mA Min.	Typ.	Max.	Refer @2000mA Typ.	Refer @3000mA Typ.	Thermal Resistance Junction to Slug (°C/ W)
UV-S	6.4	7.4	8.4	7.8	-	2
UV-M	6.0	6.8	7.6	-	7.3	2
UV	6.0	6.8	7.6	-	7.3	2
UV-L	6.0	6.8	7.6	-	7.3	2

- ProLight maintains a tolerance of ± 0.1V for Voltage measurements.

Optical Characteristics at 1000mA, T_J = 25°C

Radiation Pattern	Color	Peak Wavelength λ_P Min.	Typ.	Max.	Total included Angle (degrees) $\theta_{0.90V}$	Viewing Angle (degrees) $2\,\theta_{1/2}$
Lambertian	UV-S	365 nm	367.5 nm	370 nm	60	48
	UV-M	385 nm	387.5 nm	390 nm	60	48
	UV	390 nm	395 nm	400 nm	60	48
	UV-L	400 nm	405 nm	410 nm	60	48

- ProLight maintains a tolerance of ± 1nm for dominant wavelength measurements.

No. 89, Xiyuan Rd., Zhongli City, Taoyuan County 320,
Taiwan (R.O.C.)
Tel ：+886-3-461-8618
Fax ：+886-3-461-8677
www.prolightopto.com

We Provide the Light to the world

Absolute Maximum Ratings

Parameter	UV-S	UV-M/UV/UV-L
DC Forward Current (mA)	2000	3000
Peak Pulsed Forward Current (mA)	2200	3300
	(less than 1/10 duty cycle@1KHz)	
ESD Sensitivity (HBM per MIL-STD-883E Method 3015.7)	±4000V	
LED Junction Temperature	125˚C	
Operating Board Temperature at Maximum DC Forward Current	-40˚C - 85˚C	
Storage Temperature	-40˚C - 100˚C	
Soldering Temperature	JEDEC 020c 260˚C	
Allowable Reflow Cycles	3	
Reverse Voltage	Not designed to be driven in reverse bias	

Radiometric Power Bin Structure at 1000mA

Color	Bin Code	Minimum Radiometric Power (mW)	Maximum Radiometric Power (mW)	Available Color Bins
UV-S	A	2000	2500	All
	B	2500	3000	【1】
	C	3000	3500	【1】
	D	3500	4000	【1】
UV-M	A	2000	2500	All
	B	2500	3000	【1】
	C	3000	3500	【1】
	D	3500	4000	【1】
UV	A	2000	2500	All
	B	2500	3000	【1】
	C	3000	3500	【1】
	D	3500	4000	【1】
UV-L	A	2000	2500	All
	B	2500	3000	【1】
	C	3000	3500	【1】
	D	3500	4000	【1】

- ProLight maintains a tolerance of ± 7% on flux and power measurements.
- The flux bin of the product may be modified for improvement without notice.
- 【1】 The rest of color bins are not 100% ready for order currently. Please ask for quote and order possibility.

No. 89, Xiyuan Rd., Zhongli City, Taoyuan County 320,
Taiwan (R.O.C.)
Tel ：+886-3-461-8618
Fax ：+886-3-461-8677
www.prolightopto.com

ProLight Opto Technology Corporation

Peak Wavelength Bin Structure

Color	Bin Code	Minimum Peak Wavelength (nm)	Maximum Peak Wavelength (nm)
UV-S	2	365	370
UV-M	A	385	390
UV	1	390	395
	2	395	400
UV-L	3	400	405
	4	405	410

● ProLight maintains a tolerance of ± 1nm for peak wavelength measurements.

Forward Voltage Bin Structure

Color	Bin Code	Minimum Voltage (V)	Maximum Voltage (V)
UV-S	B	6.4	6.8
	C	6.8	7.2
	D	7.2	7.6
	E	7.6	8.0
	F	8.0	8.4
UV-M	A	6.0	6.4
	B	6.4	6.8
	C	6.8	7.2
	D	7.2	7.6
UV	A	6.0	6.4
	B	6.4	6.8
	C	6.8	7.2
	D	7.2	7.6
UV-L	A	6.0	6.4
	B	6.4	6.8
	C	6.8	7.2
	D	7.2	7.6

● ProLight maintains a tolerance of ± 0.1V for Voltage measurements.

Note: Although several bins are outlined, product availability in a particular bin varies by production run and by product performance. Not all bins are available in all colors.

No. 89, Xiyuan Rd., Zhongli City, Taoyuan County 320,
Taiwan (R.O.C.)
Tel ：+886-3-461-8618
Fax ：+886-3-461-8677
www.prolightopto.com

We Provide the Light to the world

Color Spectrum, T_J = 25°C

1. UV-S, UV-M, UV, UV-L

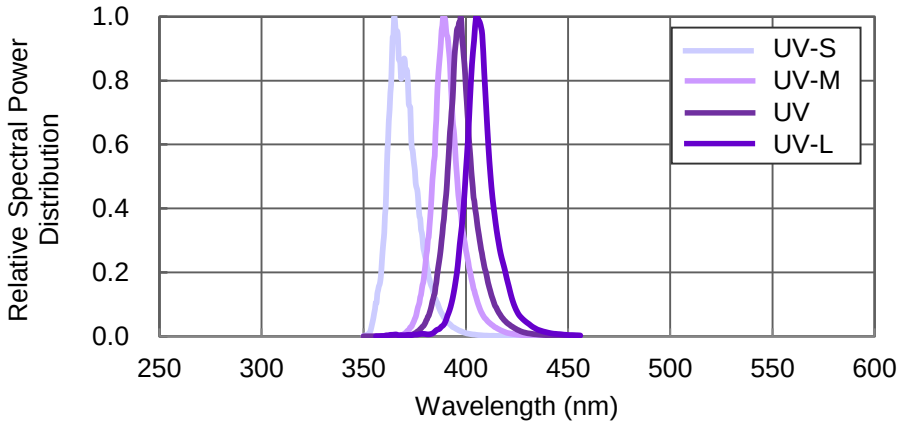

Light Output Characteristics

Relative Light Output vs. Junction Temperature at 3000mA

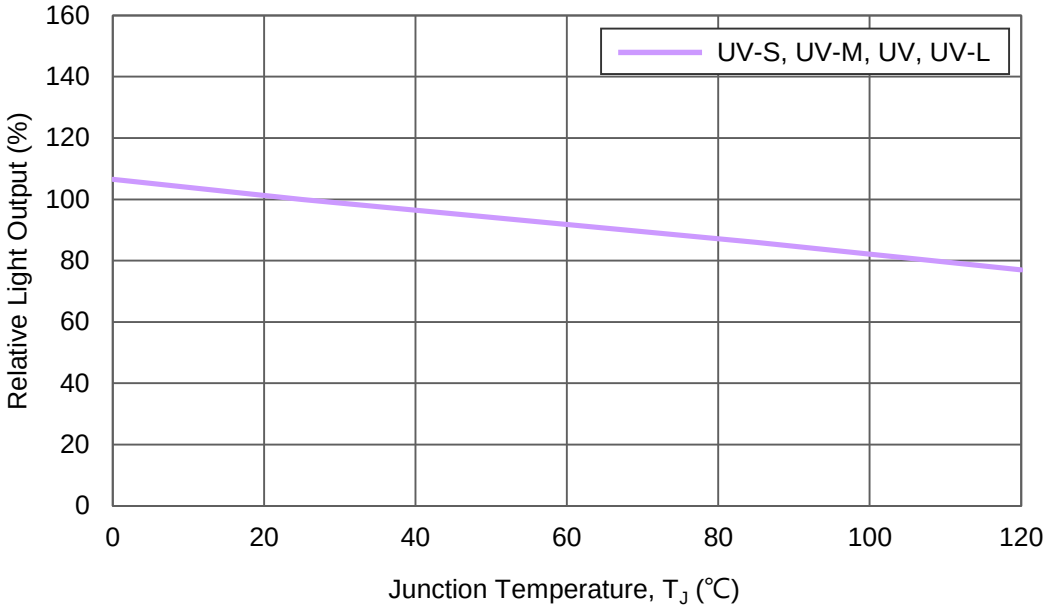

No. 89, Xiyuan Rd., Zhongli City, Taoyuan County 320,
Taiwan (R.O.C.)
Tel ：+886-3-461-8618
Fax ：+886-3-461-8677
www.prolightopto.com

We Provide the Light to the world

Forward Current Characteristics, T_J = 25°C

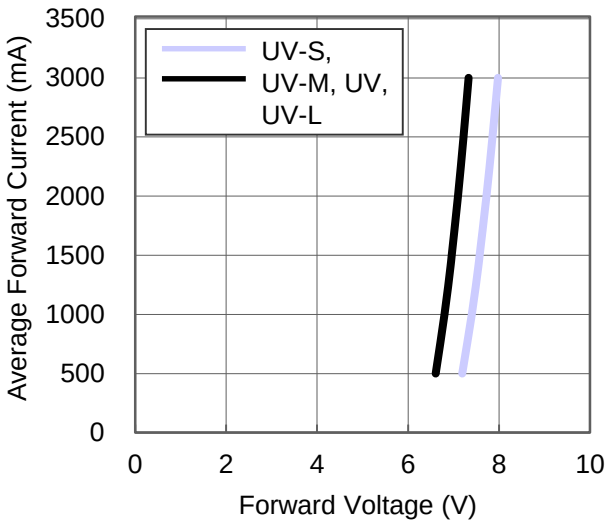

Fig 1. Forward Current vs. Forward Voltage for UV-S, UV-M, UV, UV-L.

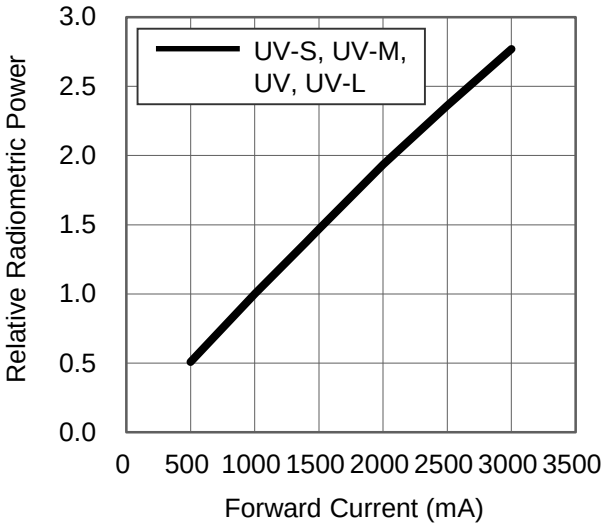

Fig 2. Relative Radiometric Power vs. Forward Current for UV-S, UV-M, UV, UV-L at T_J=25 maintained.

Typical Representative Spatial Radiation Pattern

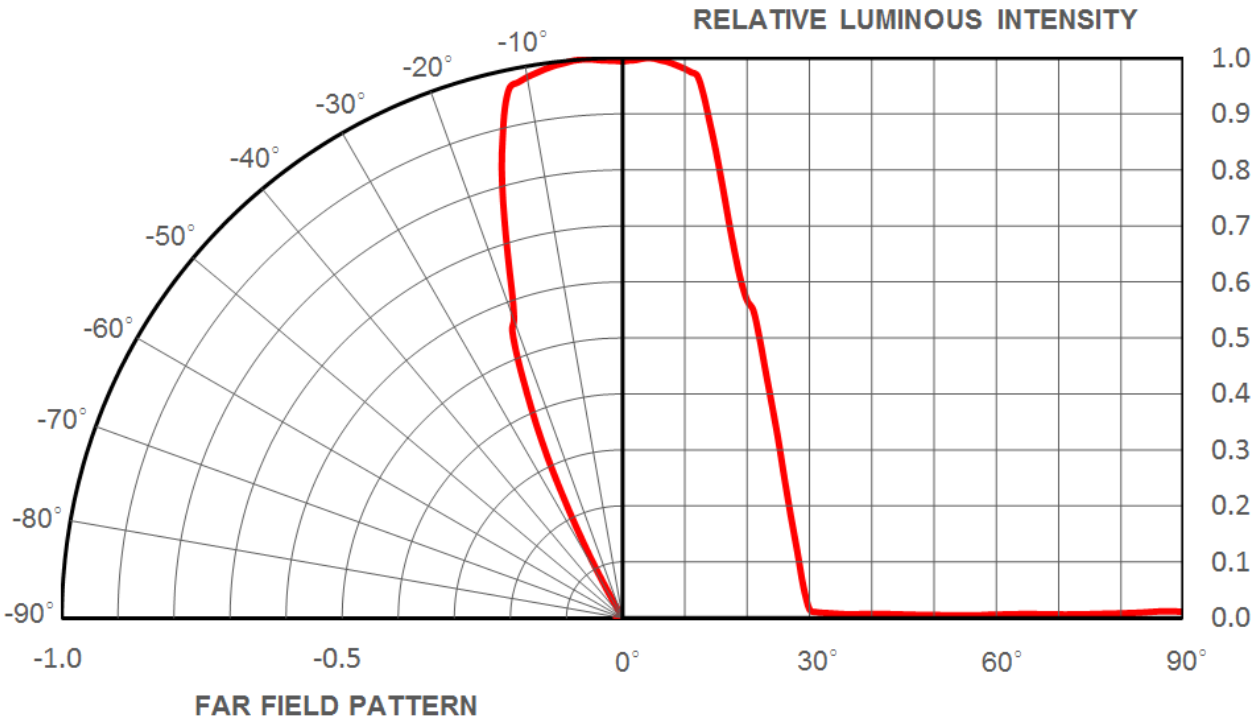

No. 89, Xiyuan Rd., Zhongli City, Taoyuan County 320,
Taiwan (R.O.C.)
Tel ：+886-3-461-8618
Fax ：+886-3-461-8677
www.prolightopto.com

Moisture Sensitivity Level - JEDEC Level 1

Level	Floor Life		Soak Requirements			
			Standard		Accelerated Environment	
	Time	Conditions	Time (hours)	Conditions	Time (hours)	Conditions
1	Unlimited	≤30˚C / 85% RH	168 +5/-0	85˚C / 85% RH	NA	NA

- The standard soak time includes a default value of 24 hours for semiconductor manufature's exposure time (MET) between bake and bag and includes the maximum time allowed out of the bag at the distributor's facility.
- Table below presents the moisture sensitivity level definitions per IPC/JEDEC's J-STD-020C.

Level	Floor Life		Soak Requirements			
			Standard		Accelerated Environment	
	Time	Conditions	Time (hours)	Conditions	Time (hours)	Conditions
1	Unlimited	≤30˚C / 85% RH	168 +5/-0	85˚C / 85% RH	NA	NA
2	1 year	≤30˚C / 60% RH	168 +5/-0	85˚C / 60% RH	NA	NA
2a	4 weeks	≤30˚C / 60% RH	696 +5/-0	30˚C / 60% RH	120 +1/-0	60˚C / 60% RH
3	168 hours	≤30˚C / 60% RH	192 +5/-0	30˚C / 60% RH	40 +1/-0	60˚C / 60% RH
4	72 hours	≤30˚C / 60% RH	96 +2/-0	30˚C / 60% RH	20 +0.5/-0	60˚C / 60% RH
5	48 hours	≤30˚C / 60% RH	72 +2/-0	30˚C / 60% RH	15 +0.5/-0	60˚C / 60% RH
5a	24 hours	≤30˚C / 60% RH	48 +2/-0	30˚C / 60% RH	10 +0.5/-0	60˚C / 60% RH
6	Time on Label (TOL)	≤30˚C / 60% RH	Time on Label (TOL)	30˚C / 60% RH	NA	NA

No. 89, Xiyuan Rd., Zhongli City, Taoyuan County 320,
Taiwan (R.O.C.)
Tel ：+886-3-461-8618
Fax ：+886-3-461-8677
www.prolightopto.com

Qualification Reliability Testing

Stress Test	Stress Conditions	Stress Duration	Failure Criteria
Room Temperature Operating Life (RTOL)	25°C, I_F = max DC (Note 1)	1000 hours	Note 2
High Temperature Storage Life (HTSL)	100°C, non-operating	1000 hours	Note 2
Low Temperature Storage Life (LTSL)	-40°C, non-operating	1000 hours	Note 2
Non-operating Temperature Cycle (TMCL)	-40°C to 100°C, 30 min. dwell, <5 min. transfer	200 cycles	Note 2
Mechanical Shock	1500 G, 0.5 msec. pulse, 5 shocks each 6 axis		Note 3
Natural Drop	On concrete from 1.2 m, 3X		Note 3
Variable Vibration Frequency	10-2000-10 Hz, log or linear sweep rate, 20 G about 1 min., 1.5 mm, 3X/axis		Note 3
Solder Heat Resistance (SHR)	260°C ± 5°C, 10 sec.		Note 3
Solderability	Steam age for 16 hrs., then solder dip at 260°C for 5 sec.		Solder coverage on lead

Notes:
1. Depending on the maximum derating curve.
2. Criteria for judging failure

Item	Test Condition	Criteria for Judgement	
		Min.	Max.
Forward Voltage (V_F)	I_F = max DC	--	Initial Level x 1.1
Luminous Flux or Radiometric Power (Φ_V)	I_F = max DC	Initial Level x 0.7	--

* The test is performed after the LED is cooled down to the room temperature.

3. A failure is an LED that is open or shorted.

No. 89, Xiyuan Rd., Zhongli City, Taoyuan County 320,
Taiwan (R.O.C.)
Tel ：+886-3-461-8618
Fax ：+886-3-461-8677
www.prolightopto.com

Recommended Solder Pad Design

Standard Emitter

TYPE A.

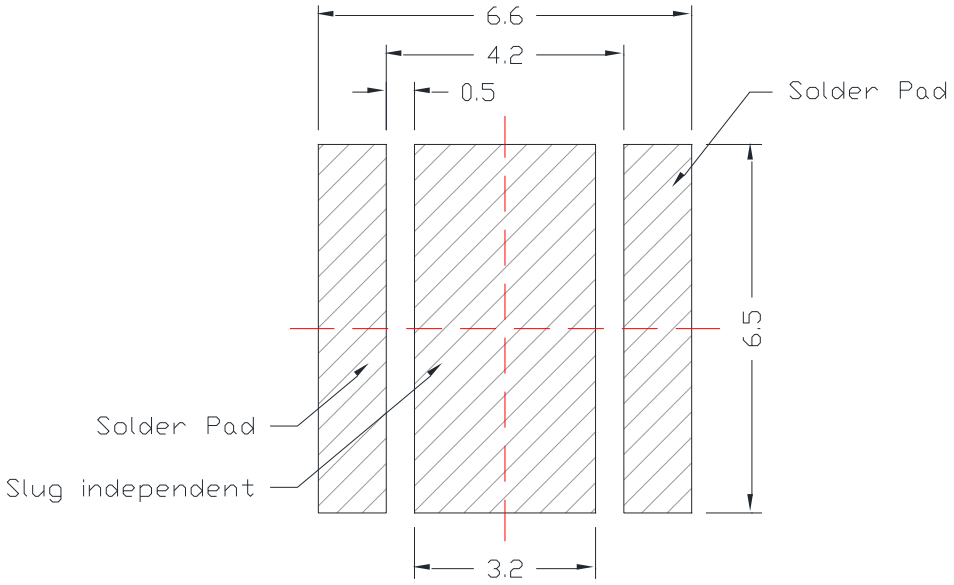

TYPE B.

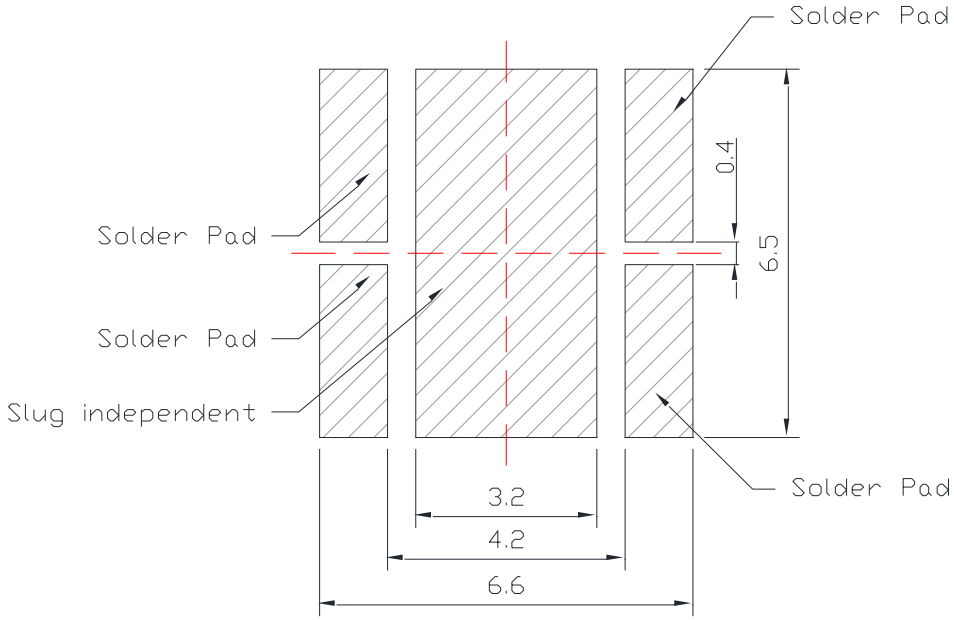

- All dimensions are in millimeters.
- Electrical isolation is required between Slug and Solder Pad.
- **The solder area must cover more than 80% of the solder pad and slug after soldering. (Voids in solder joint should be less than 20%)**

No. 89, Xiyuan Rd., Zhongli City, Taoyuan County 320,
Taiwan (R.O.C.)
Tel ：+886-3-461-8618
Fax ：+886-3-461-8677
www.prolightopto.com

Recommended MCPCB Design

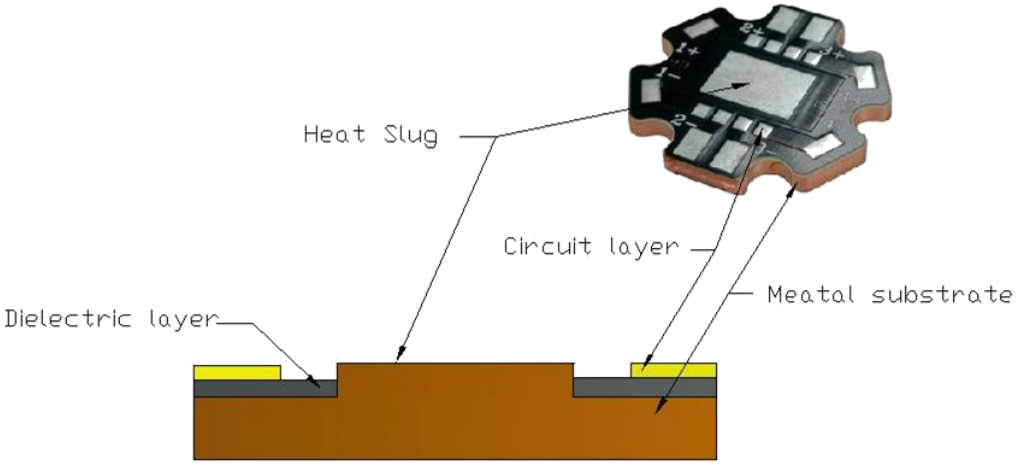

- Copper(Cu) substrate is recommended.
- The thermal conductivity of dielectric layer in the Aluminum(Al) substrate is greater or equal than 6w/mk.
- If the thermal conductivity of dielectric layer equal to 2w/mk, the power consumption should be lower than 20w.

No. 89, Xiyuan Rd., Zhongli City, Taoyuan County 320,
Taiwan (R.O.C.)
Tel ：+886-3-461-8618
Fax ：+886-3-461-8677
www.prolightopto.com

Reflow Soldering Condition

Profile Feature	Sn-Pb Eutectic Assembly	Pb-Free Assembly
Average Ramp-Up Rate (T_{Smax} to T_P)	3°C / second max.	3°C / second max.
Preheat – Temperature Min (T_{Smin}) – Temperature Max (T_{Smax}) – Time (t_{Smin} to t_{Smax})	100°C 150°C 60-120 seconds	150°C 200°C 60-180 seconds
Time maintained above: – Temperature (T_L) – Time (t_L)	183°C 60-150 seconds	217°C 60-150 seconds
Peak/Classification Temperature (T_P)	240°C	260°C
Time Within 5°C of Actual Peak Temperature (t_P)	10-30 seconds	20-40 seconds
Ramp-Down Rate	6°C/second max.	6°C/second max.
Time 25°C to Peak Temperature	6 minutes max.	8 minutes max.

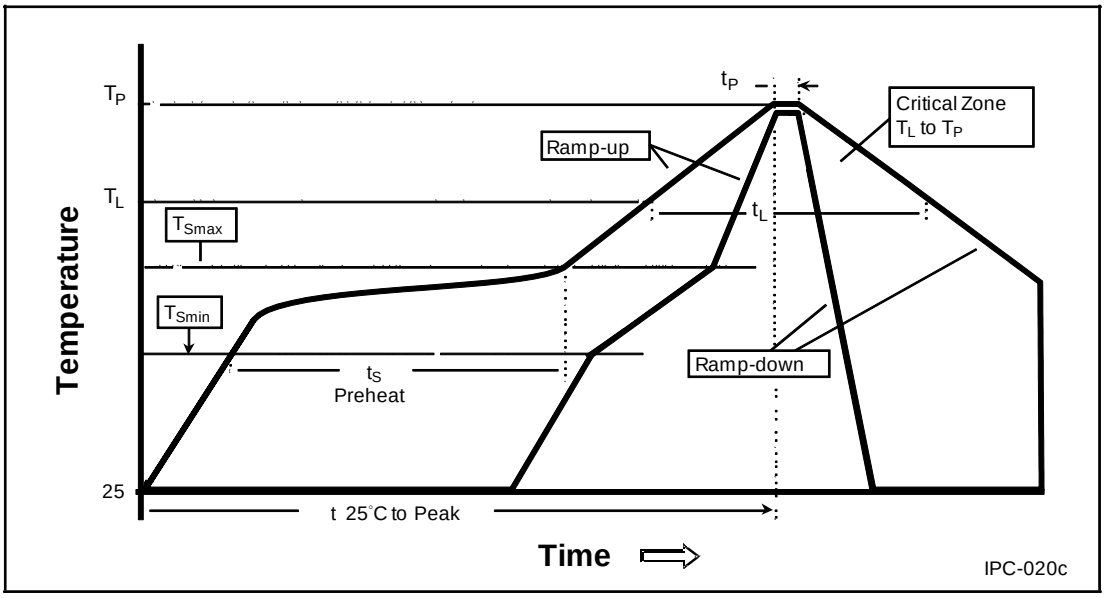

- **We recommend using the M705-S101-S4 solder paste from SMIC (Senju Metal Industry Co., Ltd.) for lead-free soldering.**
- **Do not use solder pastes with post reflow flux residue>47%. (58Bi-42Sn eutectic alloy, etc) This kind of solder pastes may cause a reliability problem to LED.**
- All temperatures refer to topside of the package, measured on the package body surface.
- Repairing should not be done after the LEDs have been soldered. When repairing is unavoidable, a double-head soldering iron should be used. It should be confirmed beforehand whether the characteristics of the LEDs will or will not be damaged by repairing.
- Reflow soldering should not be done more than three times.
- When soldering, do not put stress on the LEDs during heating.
- After soldering, do not warp the circuit board.

No. 89, Xiyuan Rd., Zhongli City, Taoyuan County 320,
Taiwan (R.O.C.)
Tel ：+886-3-461-8618
Fax ：+886-3-461-8677
www.prolightopto.com

Emitter Reel Packaging

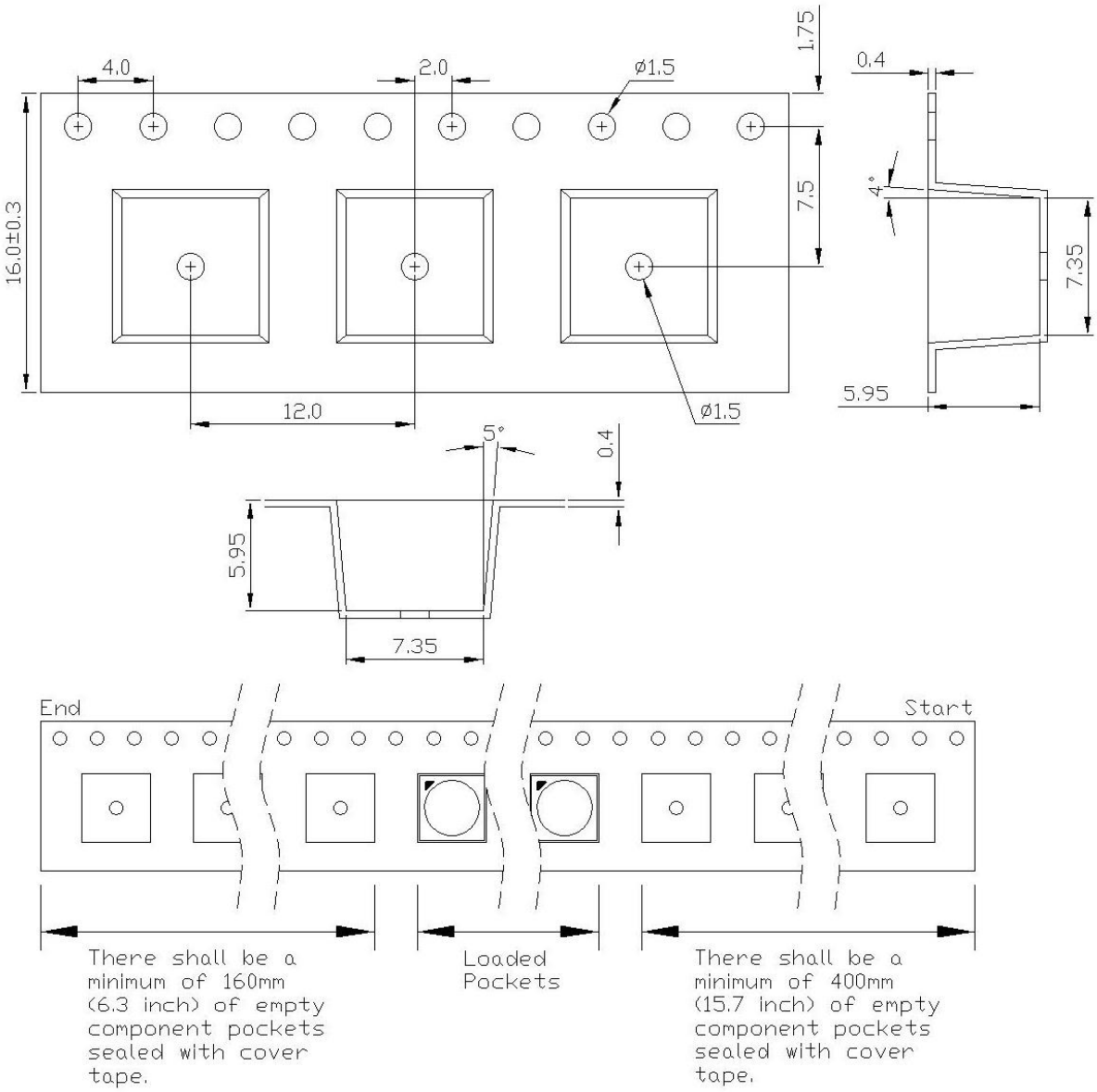

Notes:
1. Drawing not to scale.
2. All dimensions are in millimeters.
3. Unless otherwise indicated, tolerances are ± 0.10mm.

No. 89, Xiyuan Rd., Zhongli City, Taoyuan County 320,
Taiwan (R.O.C.)
Tel ：+886-3-461-8618
Fax ：+886-3-461-8677
www.prolightopto.com

Emitter Reel Packaging

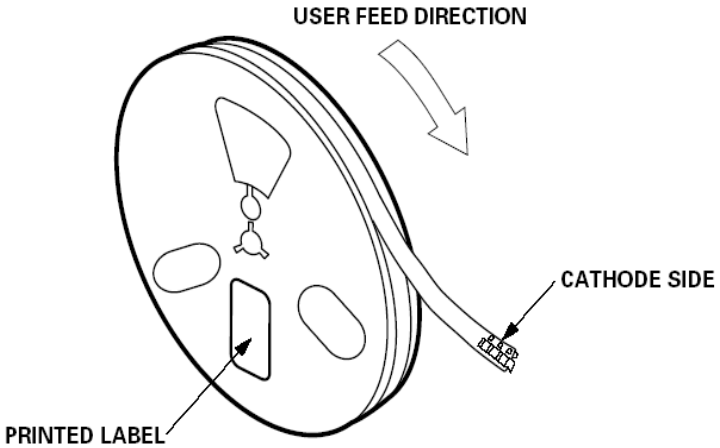

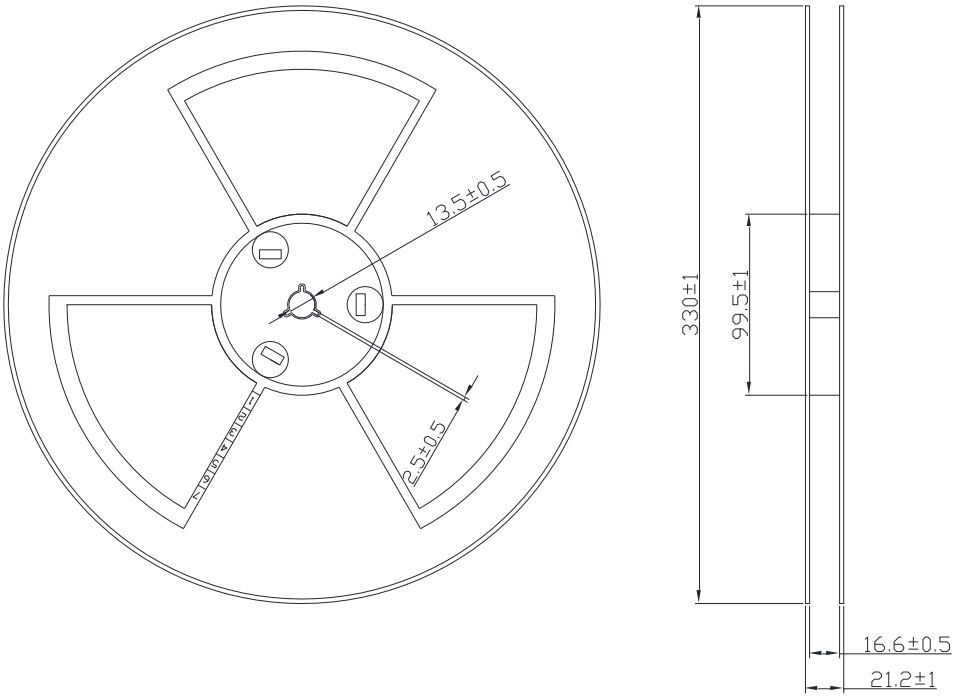

Notes:
1. Empty component pockets sealed with top cover tape.
2. 250, 500 and 750 pieces per reel.
3. Drawing not to scale.
4. All dimensions are in millimeters.

No. 89, Xiyuan Rd., Zhongli City, Taoyuan County 320,
Taiwan (R.O.C.)
Tel ：+886-3-461-8618
Fax ：+886-3-461-8677
www.prolightopto.com

We Provide the Light to the world

Precaution for Use

- Storage
  Please do not open the moisture barrier bag (MBB) more than one week. This may cause the leads of LED discoloration. We recommend storing ProLight's LEDs in a dry box after opening the MBB. The recommended storage conditions are temperature 5 to 30°C and humidity less than 40% RH. It is also recommended to return the LEDs to the MBB and to reseal the MBB.
- LEDs are ESD (electrostatic discharge) sensitive; static electricity and surge voltages seriously damage UV LEDs and can result in product failure
  (1) Ensure that tools, jigs and machines being used are properly grounded
  (2) LED mounting equipment should include protection against voltage surge
  (3) Use proper ESD protection, including grounded wrist straps, ESD footwear and clothes
- The slug is is not electrically neutral. Therefore, we recommend to isolate the heat sink.
- **We recommend using the M705-S101-S4 solder paste from SMIC (Senju Metal Industry Co., Ltd.) for lead-free soldering.**
- **Do not use solder pastes with post reflow flux residue>47%. (58Bi-42Sn eutectic alloy, etc) This kind of solder pastes may cause a reliability problem to LED.**
- Any mechanical force or any excess vibration shall not be accepted to apply during cooling process to normal temperature after soldering.
- Please avoid rapid cooling after soldering.
- Components should not be mounted on warped direction of PCB.
- Repairing should not be done after the LEDs have been soldered. When repairing is unavoidable, a heat plate should be used. It should be confirmed beforehand whether the characteristics of the LEDs will or will not be damaged by repairing.
- This device should not be used in any type of fluid such as water, oil, organic solvent and etc. When cleaning is required, isopropyl alcohol should be used.
- When the LEDs are illuminating, operating current should be decide after considering the package maximum temperature.
- The appearance, specifications and flux bin of the product may be modified for improvement without notice. Please refer to the below website for the latest datasheets.
  http://www.prolightopto.com/

Eye Safety Guidelines

- During operation, the LED emits high intensity ultraviolet (UV) light, which is harmful to skin and eyes. UV light is hazardous to skin and may cause cancer. Avoid exposure to UV light when LED is operational. Precautions must be taken to avoid looking directly at the UV light without the use of UV light protective glasses. Do not look directly at the front of the LED or at the LED's lens when LED is operational.

- Attach warning labels on products/systems that use UV LEDs.

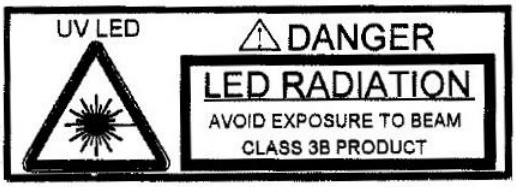

No. 89, Xiyuan Rd., Zhongli City, Taoyuan County 320,
Taiwan (R.O.C.)
Tel ：+886-3-461-8618
Fax ：+886-3-461-8677
www.prolightopto.com

Use Handling of Quartz Lens LEDs

Notes for handling of quartz lens LEDs

- Please do not use a force of over 3kgf impact or pressure on the quartz lens, otherwise it will cause a catastrophic failure.
- The LEDs should only be picked up by making contact with the sides of the LED body.
- Avoid touching the quartz lens especially by sharp tools such as Tweezers.
- Avoid leaving fingerprints on the quartz lens.
- Please store the LEDs away from dusty areas or seal the product against dust.
- When populating boards in SMT production, there are basically no restrictions regarding the form of the pick and place nozzle, except that mechanical pressure on the quartz lens must be prevented.
- Please do not mold over the quartz lens with another resin. (epoxy, urethane, etc)

DISCLAIMER

- The information in this document has been compiled from reference materials and other sources believed to be reliable, and given in good faith. No warranty, either expressed or implied, is made, however, to the accuracy and completeness of the information, nor is any responsibility assumed or implied for any loss or damage resulting from inaccuracies or omissions. Each user bears full responsibility for making their own determination as to the suitability of Prolight products, recommendations or advice for its own particular use. Prolight makes no warranty or guarantee, express or implied, as to results obtained in end-use, nor of any design incorporating its Products, recommendation or advice.

- Each user must identify and performall tests and analyses necessary to ensure that it's finished application incorporating Prolight products will be safe and suitable for use under end-use conditions. Each user of devices assumes full responsibility to become educated in and to protect from harmful irradiation. Prolight specifically disclaims any and all liability for harm arising from buyer's use or misuse of UVC devices either in development or end-use.

No. 89, Xiyuan Rd., Zhongli City, Taoyuan County 320,
Taiwan (R.O.C.)
Tel ：+886-3-461-8618
Fax ：+886-3-461-8677
www.prolightopto.com