Click to ORDER samples

AMEL3-VZ

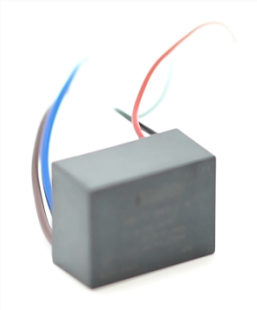

Encapsulated

The new AMEL3-VZ is an AC/DC converter that offers much greater cost effectiveness due to material normalization and production automation also leading to improved reliability and performance. Offering a commercial input voltage range of 85-264VAC and an output voltage range from 3.3-24V, this series will offer many benefits to your new system design.
This new series offers great operating temperatures, from -40°C to 70°C with full power up to 55°C. It also features an isolation of 4000VAC for improved reliability and system safety. Furthermore, a higher MTBF of 300,000h, output short circuit protection (OSCP), output over-current protection (OCP) and an output over-voltage protection (OVP) come standard with the series.
The AMEL3-VZ is perfect for street lighting controls, grid power, LED, instrumentation, industrial controls, communication and civil applications.

Features

- Universal Input: 85 - 264VAC/100 - 370VDC
- Operating Temp: -40 °C to +70 °C
- High isolation voltage: 4000VAC
- Low ripple & noise, 50mV(p-p), typ.
- Output short circuit, over-current, over-voltage protection
- Regulated Output

RoHS
3yr Warranty
c UL us

Summary

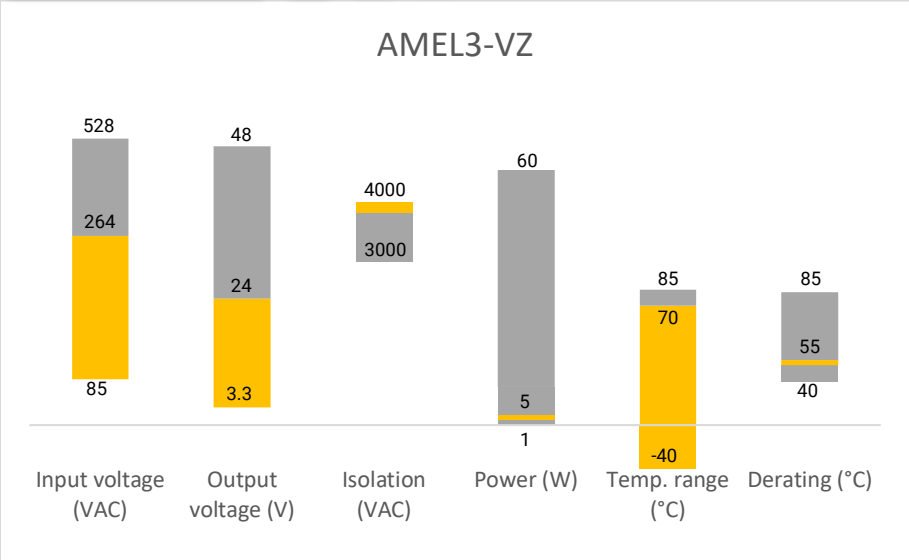

Training

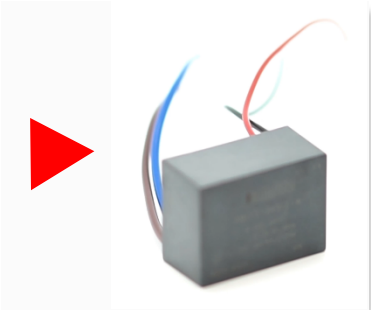

Product Training Video (click to open)

Press Release

Coming Soon!

Application Notes

Applications

Power Grid
Industrial
Telecom
Instrumentation

sales@prom-elec.com / ООО ПРОМЭЛЕКТРОНИКА

Models & Specifications

Single Output

Model	Input Voltage (VAC/Hz)	Input Voltage (VDC)	Max Output wattage (W)	Output Voltage (V)	Output Current max (A)	Maximum capacitive load (µF)	Efficiency @ 230VAC (%)
AMEL3-3.3SVZ	85-264/47-63	100-370	2.3	3.3	0.70	6000	66
AMEL3-5SVZ	85-264/47-63	100-370	3	5	0.60	6000	74
AMEL3-9SVZ	85-264/47-63	100-370	3	9	0.33	1500	75
AMEL3-12SVZ	85-264/47-63	100-370	3	12	0.25	1500	77
AMEL3-15SVZ	85-264/47-63	100-370	3	15	0.20	1000	77
AMEL3-24SVZ	85-264/47-63	100-370	3	24	0.125	330	78

Add suffix "-W" for optional wire terminal.

Input Specifications

Parameters	Conditions	Minimum	Typical	Maximum	Units
Current	115VAC			80	mA
	230VAC			45	mA
Inrush current <2ms (cold start)	115VAC		10		A
	230VAC		20		A
External fuse	slow blow type	1			A
Leakage current	230VAC/50Hz		0.1		mA(rms)

Output Specifications

Parameters	Conditions	Typical	Maximum	Units
Voltage accuracy	3.3V output	±3		%
Line regulation	Others	±2		%
Line regulation	Full load	±0.5		%
Load regulation	0-100% load	±1		%
Ripple & Noise	20MHz bandwidth	50	100	mV p-p
Hold up time	230VAC	60		ms

***Ripple and Noise are measured at 20MHz bandwidth by using the referenced Application circuit.**

Isolation Specifications

Parameters	Conditions	Typical	Rated	Units
Tested I/O voltage	60 sec		4000	VAC
Isolation Resistance		>1000		MΩ

General Specifications

Parameters	Conditions	Typical	Maximum	Units
Switching frequency	100% load	100		KHz
Protection class	Class II			
Over Current protection	Auto recovery	≥150		% of Iout
Over voltage protection	3.3V/5V Vout		≤7.5	VDC
	9V Vout		≤15	
	12V/15V Vout		≤20	
	24V Vout		≤30	
Short circuit protection	Continuous			
Short circuit restart	Auto recovery			
Operating temperature	See derating table	-40 to +70		ºC
Maximum case temperature			100	ºC
Storage temperature		-40 to +105		ºC
Lead temperature	Wave soldering	260 ± 5 ºC; time：5 - 10s		
	Hand soldering	360 ± 10 ºC; time：3 - 5s		
Temperature coefficient		±0.02		% / ºC
Cooling	Free air convection			
Humidity			95	%RH
Case material	Heat resistant black Plastic (flammability to UL 94V-0)			
Weight	PCB mountable models	25		g
Dimensions (L x W x H)	PCB mountable models	1.46 x 0.96 x 0.71 (37 x 24.5 x 18mm)		
MTBF	> 300 000 hrs (MIL-HDBK -217F, t=+25ºC)/Full Load			

NOTE: All specifications in this datasheet are measured at an ambient temperature of 25°C, humidity<75%, nominal input voltage and at rated output load unless otherwise specified.

Safety Specifications

Parameters		
Agency approvals	cULus	
Standards	IEC/EN/UL 60950-1, IEC/EN/UL 62368-1	
	EMI - Conducted and radiated emission	EN55032, class A
		EN55032, class B with EMC recommended circuit
	Electrostatic Discharge Immunity	IEC 61000-4-2, Contact: ±6KV/Air: ±8KV, Criteria B
	RF, Electromagnetic Field Immunity	IEC 61000-4-3, 10V/m, Criteria A
	Electrical Fast Transient/Burst Immunity	IEC 61000-4-4, ±2KV, Criteria B
		IEC 61000-4-4, ±4KV, Criteria B with EMC recommended circuit
	Surge Immunity	IEC 61000-4-5, ±1KV Criteria B
		IEC 61000-4-5, ±2KV, Criteria B with EMC recommended circuit
	RF, Conducted Disturbance Immunity	IEC 61000-4-6, 10Vrms, Criteria A
	Voltage dips, Short Interruptions Immunity	IEC 61000-4-11, 0-70%, Criteria B

Derating

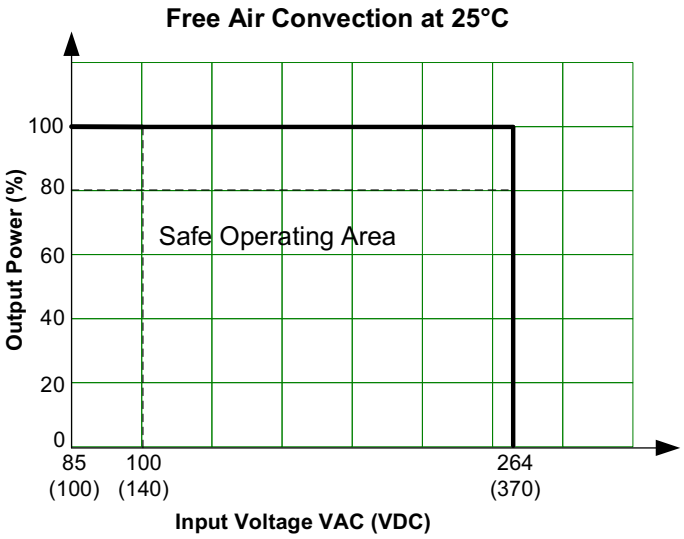

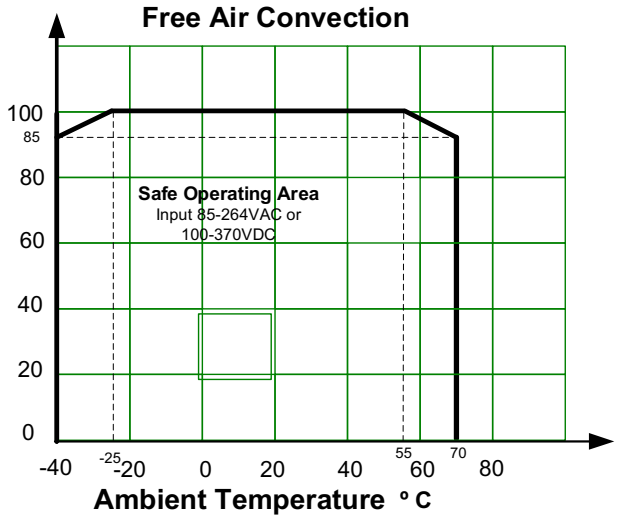

Typical Application Circuit

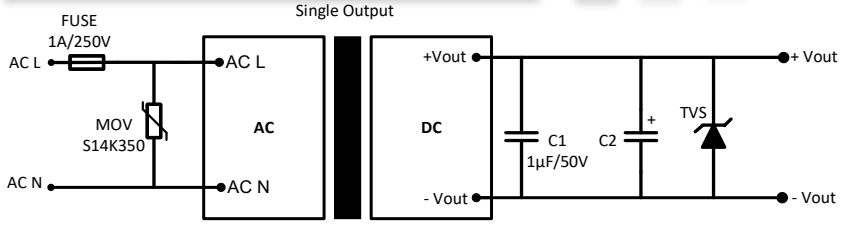

Model	C2	TVS
3.3 & 5 Vout	150 µF / 35V	7V
9Vout	120 µF / 35V	12V
12 & 15 Vout	120 µF / 35V	20V
24 Vout	68 µF / 35V	30V

EMC Recommended Circuit

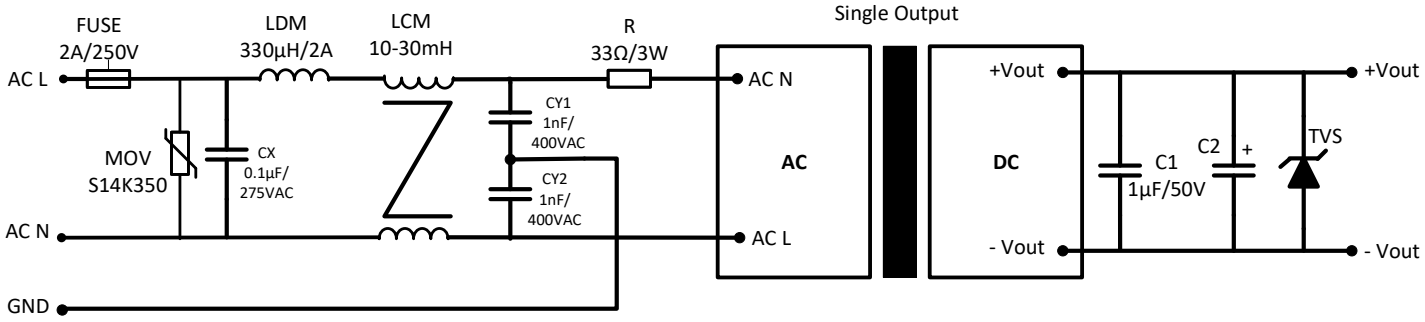

Dimensions

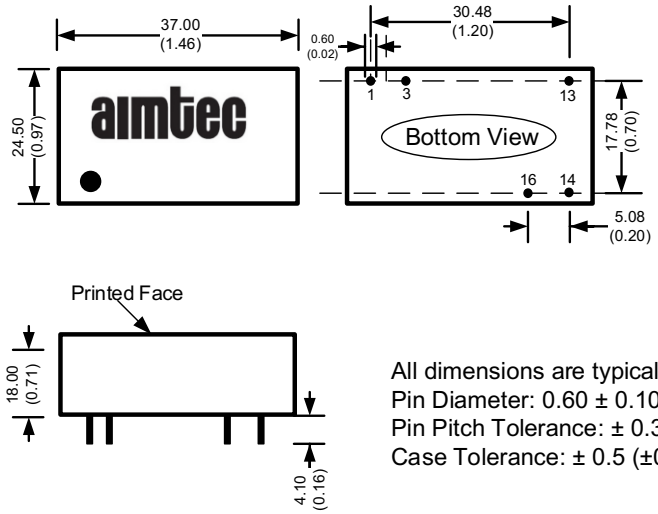

All dimensions are typical: millimeters (inches)
Pin Diameter: 0.60 ± 0.10 (0.02 ± 0.004)
Pin Pitch Tolerance: ± 0.35 (±0.014)
Case Tolerance: ± 0.5 (±0.02)

Pin Output Specifications	
Pin	Single
1	AC Input (L)
3	AC Input (N)
13	NC
14	-V Output
16	+V Output

Dimensions with -W options

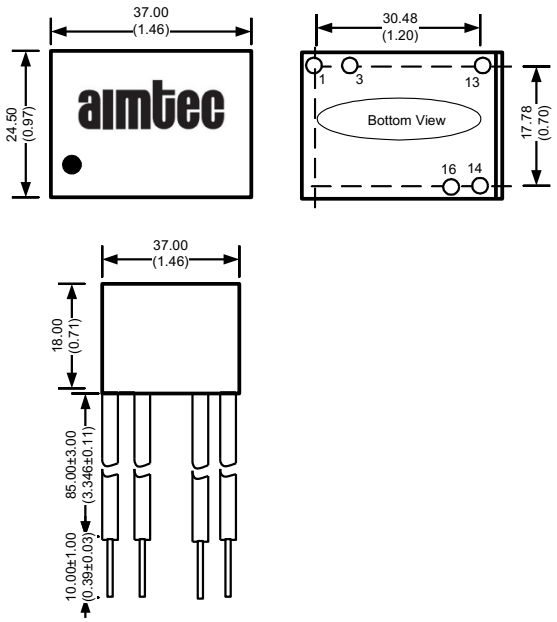

Wire is UL 1015/CSATEM listed #22AWG
Wire Tolerance: ±0.30[±0.012]

Pin Output Specifications	
Pin	Single
1 brown	AC Input (L)
3 blue	AC Input (N)
13	NC
14 black	-V Output
16 red	+V Output

NOTE: 1. Datasheets are updated as needed and as such, specifications are subject to change without notice. Once printed or downloaded, datasheets are no longer controlled by Aimtec; refer to www.aimtec.com for the most current product specifications. **2.** Product labels shown, including safety agency certifications on labels, may vary based on the date manufactured. **3.** Mechanical drawings and specifications are for reference only. **4.** All specifications are measured at an ambient temperature of 25°C, humidity<75%, nominal input voltage and at rated output load unless otherwise specified. **5.** Aimtec may not have conducted destructive testing or chemical analysis on all internal components and chemicals at the time of publishing this document. CAS numbers and other limited information are considered proprietary and may not be available for release. **6.** This product is not designed for use in critical life support systems, equipment used in hazardous environments, nuclear control systems or other such applications which necessitate specific safety and regulatory standards other the ones listed in this datasheet. **7.** Warranty is in accordance with Aimtec's standard Terms of Sale available at www.aimtec.com.