ULQ2801 - ULQ2802
ULQ2803 - ULQ2804

Eight Darlington array

Features

- Eight Darlingtons per package
- Extended temperature range: -40 to 105 °C
- Output current to 500 mA
- Output voltage to 50 V
- Integral suppression diodes
- Versions for all popular logic families
- Output can be paralleled
- Inputs pinned opposite outputs to simplify board layout

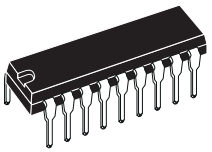

DIP-18

Description

The ULQ2801A-ULQ2804A each contain eight Darlington transistors with common emitters and integral suppression diodes for inductive loads. Each Darlington features a peak load current rating of 600 mA (500 mA continuous) and can withstand at least 50 V in the off state. Outputs may be paralleled for higher current capability.

Five versions are available to simplify interfacing to standard logic families: the ULQ2801A is designed for general purpose applications with a current limit resistor; the ULQ2802A has a 10.5 kΩ input resistor and zener for 14-25V PMOS; the ULQ2803A has a 2.7 kΩ input resistor for 5 V TTL and CMOS; the ULQ2804A has a 10.5 kΩ input resistor for 6-15 V CMOS.

All types are supplied in a 18-lead plastic DIP with a copper lead from and feature the convenient input-opposite-output pinout to simplify board layout.

Table 1. Device summary

Order codes	Package
ULQ2801A	DIP-18
ULQ2802A	DIP-18
ULQ2803A	DIP-18
ULQ2804A	DIP-18

sales@prom-elec.com / ООО ПРОМЭЛЕКТРОНИКА

Contents

1 Diagrams 3

2 Pin configuration 4

3 Maximum ratings 5

4 Electrical characteristics 6

5 Test circuits 7

6 Package mechanical data 10

7 Revision history 12

1 Diagrams

Figure 1. Schematic diagrams

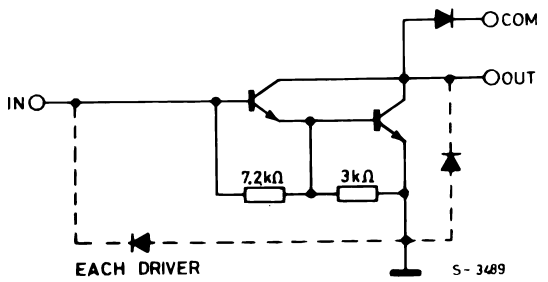

For ULQ2801A (each driver for PMOS-CMOS)

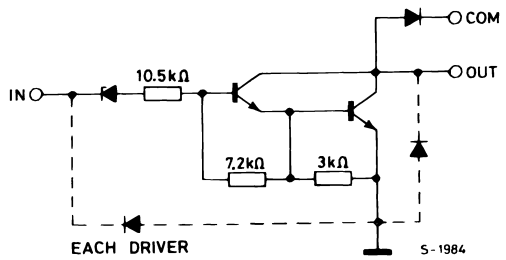

For ULQ2802A (each driver for 14-15 V PMOS)

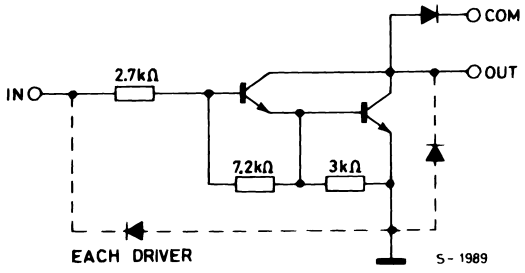

For ULQ2803A (each driver for 5 V, TTL/CMOS)

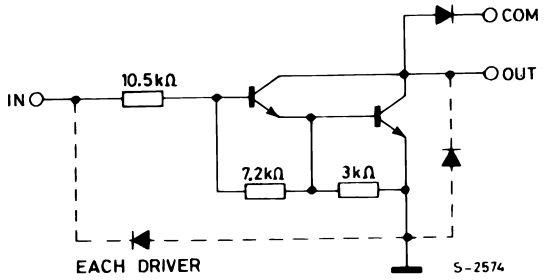

For ULQ2804A (each driver for 6-15 V CMOS/PMOS)

2 Pin configuration

Figure 2. Pin connections (top view)

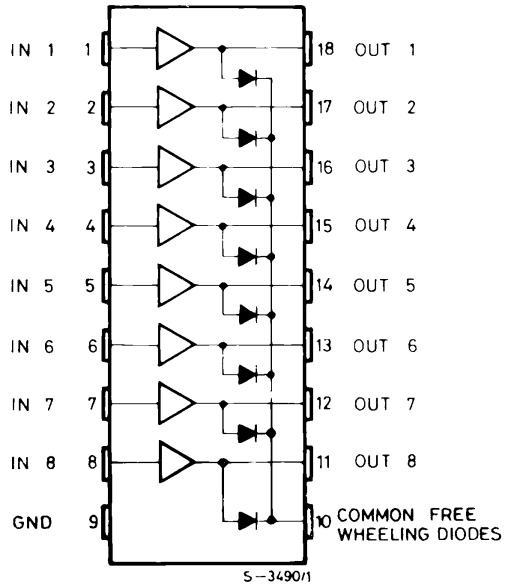

3 Maximum ratings

Table 2. Absolute maximum ratings

Symbol	Parameter	Value	Unit
V_O	Output voltage	50	V
V_I	Input voltage (for ULQ2802A - ULQ2803A - ULQ2804A)	30	V
I_C	Continuous collector current	500	mA
I_B	Continuous base current	25	mA
P_{TOT}	Power dissipation (one Darlington pair)	1	W
	Power dissipation (total package)	2.25	
T_A	Operating ambient temperature range	- 40 to 85	°C
T_{STG}	Storage temperature range	- 55 to 150	°C

Table 3. Thermal data

Symbol	Parameter	Value	Unit
R_{thJA}	Thermal resistance junction-ambient, Max.	55	°C/W

4 Electrical characteristics

Table 4. Electrical characteristics
(T_A = 25 °C unless otherwise specified).

Symbol	Parameter	Test condition	Min.	Typ.	Max.	Unit
I_{CEX}	Output leakage current	V_{CE} = 50V, (*Figure 7*)			50	µA
		T_A = 105°C, V_{CE}= 50V (*Figure 7*)			100	
		T_A = 105°C for ULQ2802A, V_{CE}= 50V, V_I = 6V (*Figure 8*)			500	
		T_A = 105°C for ULQ2804A, V_{CE}= 50V, V_I = 1V (*Figure 8*)			500	
$V_{CE(SAT)}$	Collector-emitter saturation voltage (*Figure 9*)	I_C = 100mA, I_B = 250µA		0.9	1.1	V
		I_C = 200mA, I_B= 350µA		1.1	1.3	
		I_C = 350mA, I_B= 500µA		1.3	1.6	
$I_{I(ON)}$	Input current (*Figure 6*)	for ULQ2802A, V_I = 17V		0.82	1.25	mA
		for ULQ2803A, V_I = 3.85V		0.93	1.35	
		for ULQ2804A, V_I = 5V		0.35	0.5	
		V_I = 12V		1	1.45	
$I_{I(OFF)}$	Input current (*Figure 7*)	T_A = 105°C, I_C = 500µA	50	65		µA
$V_{I(ON)}$	Input voltage (*Figure 8*)	V_{CE}= 2V, for ULQ2802A I_C = 300mA for ULQ2803A I_C = 200mA I_C = 250mA I_C = 300mA for ULQ2804A I_C = 125mA I_C = 200mA I_C = 275mA I_C = 350mA			 13 2.4 2.7 3 5 6 7 8	V
h_{FE}	DC forward current gain (*Figure 5*)	for ULQ2801A, V_{CE} = 2V, I_C = 350mA	1000			
C_I	Input capacitance			15	25 (1)	pF
t_{PLH}	Turn-on delay time	0.5 V_I to 0.5V_O		0.25	1 (1)	µs
t_{PHL}	Turn-off delay time	0.5 V_I to 0.5V_O		0.25	1 (1)	µs
I_R	Clamp diode leakage current (*Figure 9*)	V_R = 50V			50	µA
		T_A = 105°C, V_R = 50V			100	
V_F	Clamp diode forward voltage (*Figure 10*)	I_F = 350mA		1.7	2	V

1. Guaranteed by design.

5 Test circuits

Figure 3. Output leakage current

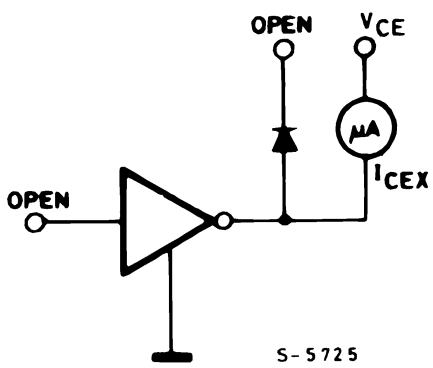

Figure 4. Output leakage current

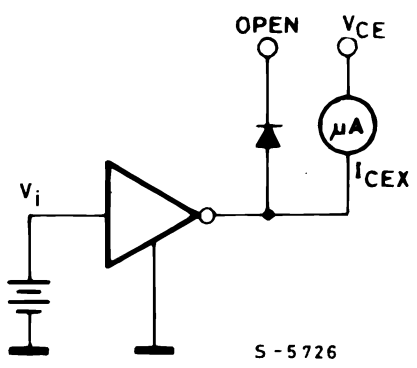

Figure 5. Collector-emitter saturation voltage

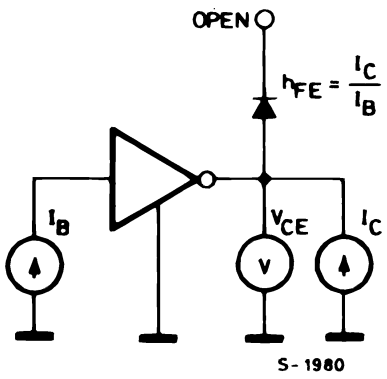

Figure 6. Input current (ON)

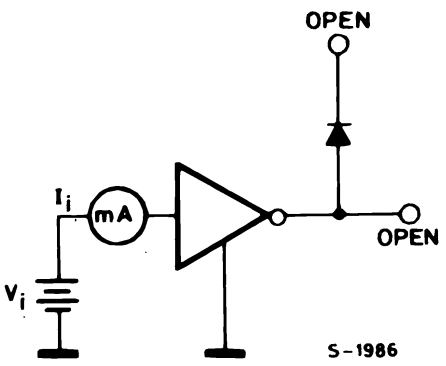

Figure 7. Input current (OFF)

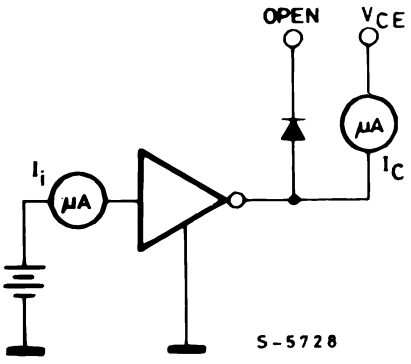

Figure 8. Input voltage

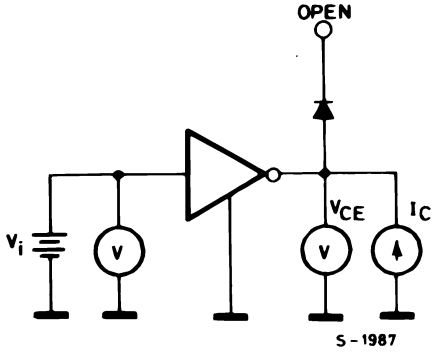

Figure 9. Clamp diode leakage current

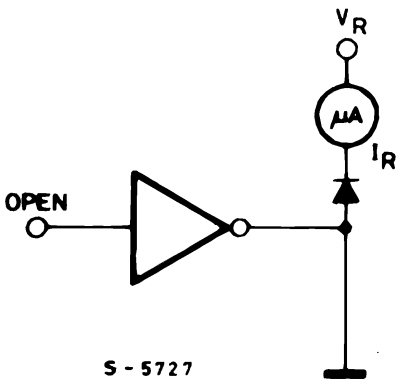

Figure 10. Clamp diode forward voltage

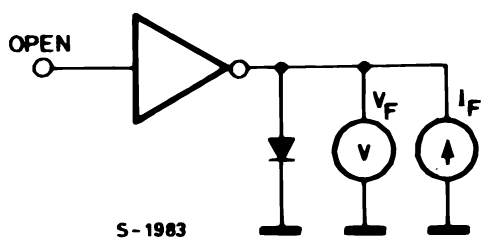

Figure 11. Collector current as a function of saturation voltage

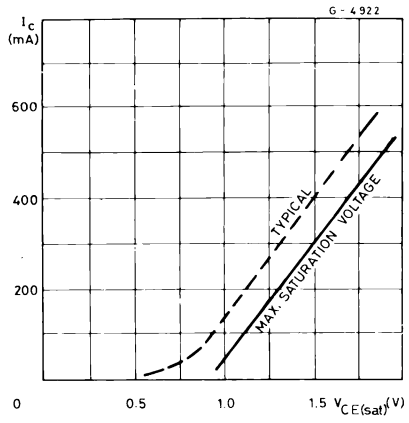

Figure 12. Collector current as a function of input current

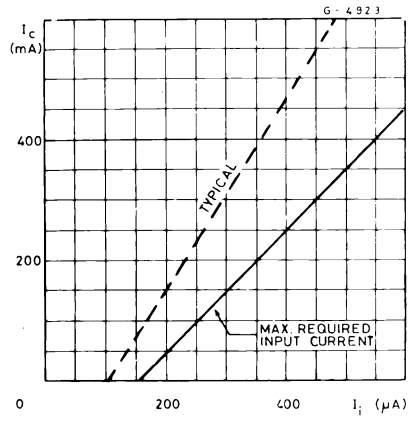

Figure 13. Allowable average power dissipation as a function of T_A

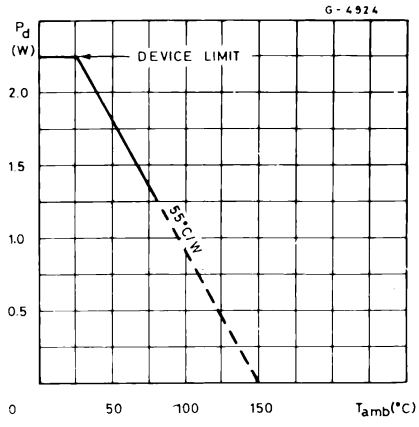

Figure 14. Peak collector current as a function of duty cycle

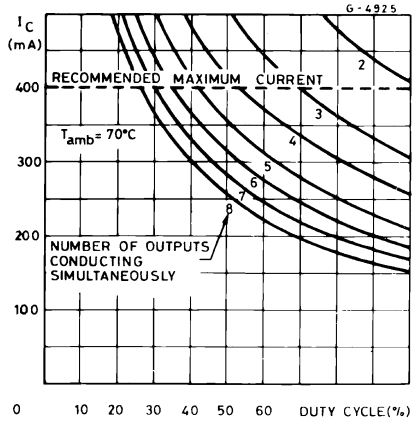

Figure 15. Peak collector current as a function of duty

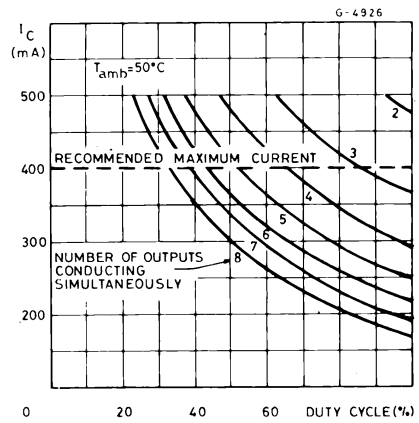

Figure 16. Input current as a function of input voltage (for ULQ2802A)

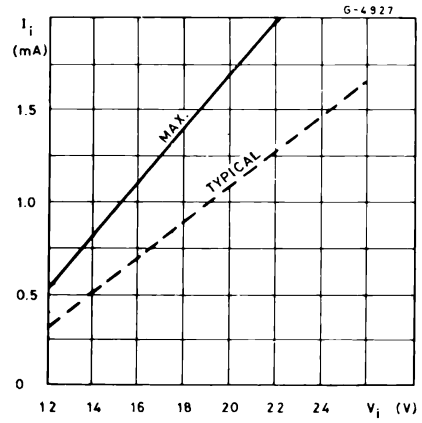

Figure 17. Input current as a function of input voltage (for ULQ2804A)

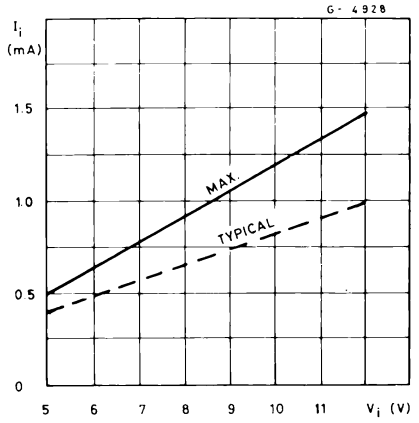

Figure 18. Input current as a function of input voltage (for ULQ2803A)

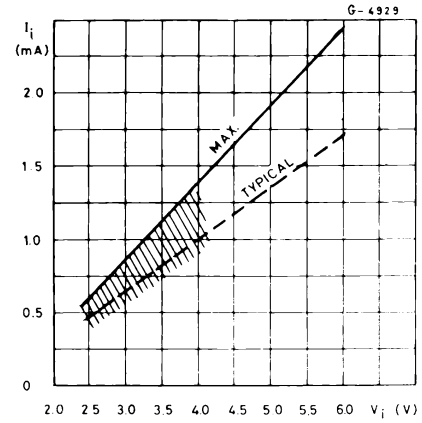

6 Package mechanical data

In order to meet environmental requirements, ST offers these devices in ECOPACK® packages. These packages have a lead-free second level interconnect. The category of second Level Interconnect is marked on the package and on the inner box label, in compliance with JEDEC Standard JESD97. The maximum ratings related to soldering conditions are also marked on the inner box label. ECOPACK is an ST trademark. ECOPACK specifications are available at: www.st.com.

DIM.	mm			inch		
	MIN.	TYP.	MAX.	MIN.	TYP.	MAX.
a1	0.254			0.010		
B	1.39		1.65	0.055		0.065
b		0.46			0.018	
b1		0.25			0.010	
D			23.24			0.915
E		8.5			0.335	
e		2.54			0.100	
e3		20.32			0.800	
F			7.1			0.280
I			3.93			0.155
L		3.3			0.130	
Z		1.27	1.59		0.050	0.063

OUTLINE AND MECHANICAL DATA

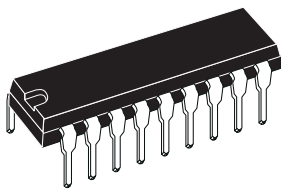

DIP18

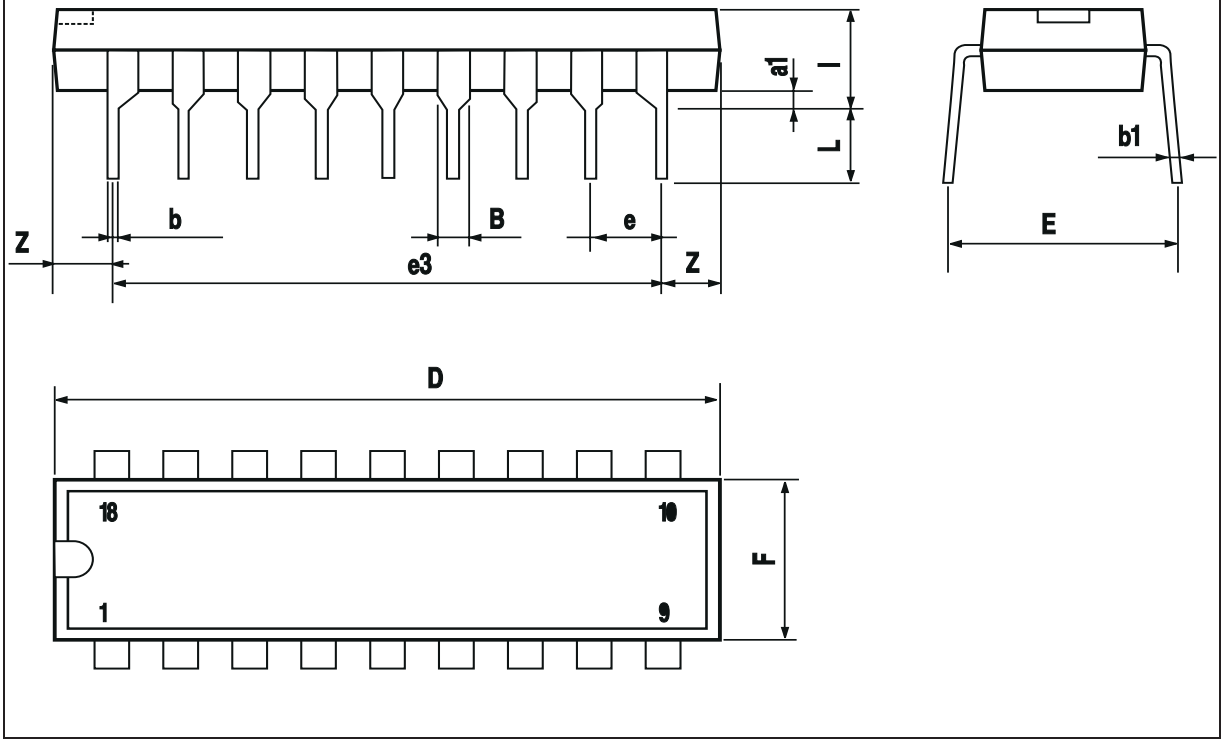

7 Revision history

Table 5. Document revision history

Date	Revision	Changes
19-Sep-2003	1	First issue.
25-Jun-2008	2	Added: *Table 1 on page 1*.

Please Read Carefully:

Information in this document is provided solely in connection with ST products. STMicroelectronics NV and its subsidiaries (“ST”) reserve the right to make changes, corrections, modifications or improvements, to this document, and the products and services described herein at any time, without notice.

All ST products are sold pursuant to ST’s terms and conditions of sale.

Purchasers are solely responsible for the choice, selection and use of the ST products and services described herein, and ST assumes no liability whatsoever relating to the choice, selection or use of the ST products and services described herein.

No license, express or implied, by estoppel or otherwise, to any intellectual property rights is granted under this document. If any part of this document refers to any third party products or services it shall not be deemed a license grant by ST for the use of such third party products or services, or any intellectual property contained therein or considered as a warranty covering the use in any manner whatsoever of such third party products or services or any intellectual property contained therein.

UNLESS OTHERWISE SET FORTH IN ST’S TERMS AND CONDITIONS OF SALE ST DISCLAIMS ANY EXPRESS OR IMPLIED WARRANTY WITH RESPECT TO THE USE AND/OR SALE OF ST PRODUCTS INCLUDING WITHOUT LIMITATION IMPLIED WARRANTIES OF MERCHANTABILITY, FITNESS FOR A PARTICULAR PURPOSE (AND THEIR EQUIVALENTS UNDER THE LAWS OF ANY JURISDICTION), OR INFRINGEMENT OF ANY PATENT, COPYRIGHT OR OTHER INTELLECTUAL PROPERTY RIGHT.

UNLESS EXPRESSLY APPROVED IN WRITING BY AN AUTHORIZED ST REPRESENTATIVE, ST PRODUCTS ARE NOT RECOMMENDED, AUTHORIZED OR WARRANTED FOR USE IN MILITARY, AIR CRAFT, SPACE, LIFE SAVING, OR LIFE SUSTAINING APPLICATIONS, NOR IN PRODUCTS OR SYSTEMS WHERE FAILURE OR MALFUNCTION MAY RESULT IN PERSONAL INJURY, DEATH, OR SEVERE PROPERTY OR ENVIRONMENTAL DAMAGE. ST PRODUCTS WHICH ARE NOT SPECIFIED AS "AUTOMOTIVE GRADE" MAY ONLY BE USED IN AUTOMOTIVE APPLICATIONS AT USER’S OWN RISK.

Resale of ST products with provisions different from the statements and/or technical features set forth in this document shall immediately void any warranty granted by ST for the ST product or service described herein and shall not create or extend in any manner whatsoever, any liability of ST.

ST and the ST logo are trademarks or registered trademarks of ST in various countries.

Information in this document supersedes and replaces all information previously supplied.

The ST logo is a registered trademark of STMicroelectronics. All other names are the property of their respective owners.

© 2008 STMicroelectronics - All rights reserved

STMicroelectronics group of companies

Australia - Belgium - Brazil - Canada - China - Czech Republic - Finland - France - Germany - Hong Kong - India - Israel - Italy - Japan - Malaysia - Malta - Morocco - Singapore - Spain - Sweden - Switzerland - United Kingdom - United States of America

www.st.com