TRM500

v1.1

Copyright © 2025, UAB TELTONIKA NETWORKS. Specifications and information given in this document are subject to change by UAB TELTONIKA NETWORKS without prior notice.

HARDWARE

FRONT VIEW

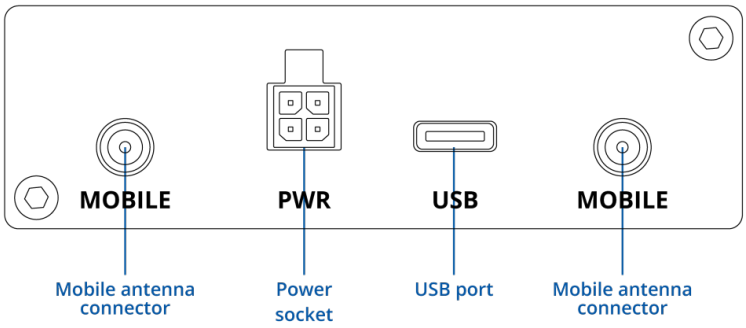

BACK VIEW

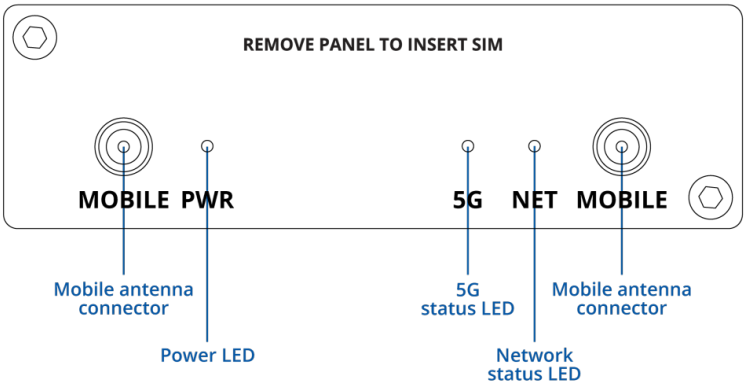

POWER SOCKET PINOUT

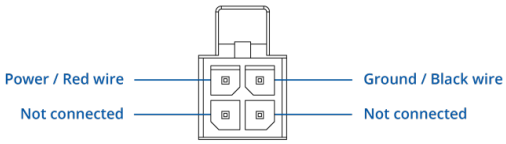

Copyright © 2025, UAB TELTONIKA NETWORKS. Specifications and information given in this document are subject to change by UAB TELTONIKA NETWORKS without prior notice.

FEATURES

Mobile

Mobile module	5G Sub-6Ghz SA/NSA 2.4/3.4Gbps DL (4x4 MIMO), 900/550 Mbps UL (2x2); 4G (LTE) – LTE Cat 19 1.6Gbps DL, Cat 18 200Mbps UL; 3G – 42 Mbps DL, 5.76Mbps UL
3GPP Release	Release 16

Power

Connector	1 x 4-pin industrial DC power socket 1 x USB Type-C (The USB host must provide 5V @ 3A to power the device via the USB Type-C port)
Input voltage range	4-pin: 9 - 30 VDC, overvoltage protection, reverse polarity protection, surge protection >35 VDC 10us max USB Type-C: 5 VDC
Power consumption	Idle: < 5 W, Max: < 12 W

Physical Interfaces

Status LEDs	1 x Power LED, 1 x 5G LED, 1 x Network LED
SIM	1 x SIM slot (Mini SIM – 2FF), 1.8 V/3 V
Power	1 x 4-pin power connector 1 x USB Type-C (The USB host must provide 5V @ 3A to power the device via the USB Type-C port)
Antennas	4 x SMA for Mobile
Other	1 x Virtual network interface via USB Type-C (For power and network data)

Physical Specification

Casing material	Anodized aluminum housing and panels
Dimensions (W x H x D)	83 x 25 x 85.4 mm
Weight	94.5 g
Mounting options	DIN rail, wall mount, flat surface (all require additional kit)

Operating Environment

Operating temperature	-40 °C to 75 °C
Operating humidity	10% to 90% non-condensing
Ingress Protection Rating	IP30

Copyright © 2025, UAB TELTONIKA NETWORKS. Specifications and information given in this document are subject to change by UAB TELTONIKA NETWORKS without prior notice.

TRM SOFTWARE

Management Software	Windows Connection Manager, Modem Manager (Linux)
USB Serial Driver	Windows 7/8/8.1/10/11,Linux 2.6~6.3,Android 4.x ~ 13
GNSS Driver	Android 4.x ~ 13
RIL Driver	Android 4.x ~ 13
NDIS Driver	Windows 7/8/8.1/10/11
MBIM Driver	Windows 8/8.1/10/11, Linux 3.18~6.3
Gobinet Driver	Linux 2.6/3.x/4.1~4.14
QMI_WWAN Driver	Linux 3.4~6.3

Regulatory & Type Approvals

Regulatory	CE, UKCA, RCM, CB, WEEE

EMC Emissions & Immunity

Standards	EN 55032:2015+A1:2020 EN 55035:2017+A11:2020 EN 61000-3-3:2013+A1:2019+A2:2021 EN IEC 61000-3-2:2019+A1:2021 EN 301 489-1 V2.2.3 EN 301 489-52 V1.2.1 AS/NZS CISPR 32:2015+A1:2020
ESD	EN 61000-4-2: 2009
Radiated Immunity	EN IEC 61000-4-3: 2020
EFT	EN 61000-4-4: 2012
Surge Immunity (AC Mains Power Port)	EN 61000-4-5: 2014+A1: 2017
CS	EN 61000-4-6: 2014
DIP	EN IEC 61000-4-11:2020

Copyright © 2025, UAB TELTONIKA NETWORKS. Specifications and information given in this document are subject to change by UAB TELTONIKA NETWORKS without prior notice.

RF

Standards	EN 301 908-1 V15.2.1 EN 301 908-2 V13.1.1 EN 301 908-13 V13.2.1 EN 301 908-25 V15.1.1 AS/CA S042.1:2022 AS/CA S042.4:2022 AS/CA S042.5:2022+A1:2022 FCC Part 22 Draft EN 301 908-25 V15.1.1_0.0.21

Safety

Standards	CE: EN IEC 62368-1:2020+A11:2020, EN IEC 62311:2020 RCM: AS/NZS CISPR 32: 2015+A1:2020 CB: EN IEC 62368-1:2020+A11:2020

Copyright © 2025, UAB TELTONIKA NETWORKS. Specifications and information given in this document are subject to change by UAB TELTONIKA NETWORKS without prior notice.

ORDERING

STANDARD PACKAGE*

TRM500

9W PSU

4 X 5G MOBILE SMA ANTENNAS

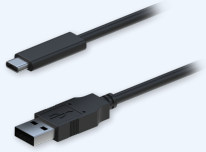

USB TYPE-C CABLE (0.8M)

1 X HEX KEY

SIM ADAPTER KIT

QSG (QUICK START GUIDE)

- TRM500
- 9 W PSU
- 4x 5G Mobile antenna (swivel, SMA male)
- 1x hex key
- SIM Adapter kit
- QSG (Quick Start Guide)
- USB Type-C cable (0.8 m)
- Packaging box

*Standard package contents may differ based on standard order codes.

For more information on all available packaging options – please contact us directly.

Copyright © 2025, UAB TELTONIKA NETWORKS. Specifications and information given in this document are subject to change by UAB TELTONIKA NETWORKS without prior notice.

CLASSIFICATION CODES

HS Code: 851762

HTS: 8517.62.00

AVAILABLE VERSIONS

TRM500 **0***** EMEA[1], APAC[2], Brazil	**5G NR(SA/NSA):** n1, n3, n5, n7, n8, n20, n28, n38, n40, n41, n71, n75, n76, n77, n78 **4G (LTE-FDD):** B1, B3, B5, B7, B8, B20, B28, B32, B71 **4G (LTE-TDD):** B38, B40, B41, B42, B43 **3G:** B1, B5, B8	TRM500000000 / Standard package with EU PSU TRM500000200 / Standard package with UK PSU TRM500000300 / Standard package with AU PSU TRM500000400 / Mass packing code

1 - Regional availability - excluding Russia, Belarus & Iran

2 - Excluding China/Japan

The price and lead-times for region (operator) specific versions may vary. For more information please contact us.

TRM500 SPATIAL MEASUREMENTS

PHYSICAL SPECIFICATION

Device housing*:	83 x 25 x 85.4 mm
Box:	355 x 60 x 175 mm
	*Housing measurements are presented without antenna connectors and screws; for measurements of other device elements look to the sections below.

Copyright © 2025, UAB TELTONIKA NETWORKS. Specifications and information given in this document are subject to change by UAB TELTONIKA NETWORKS without prior notice.

TOP VIEW

The figure below depicts the measurements of device and its components as seen from the top:

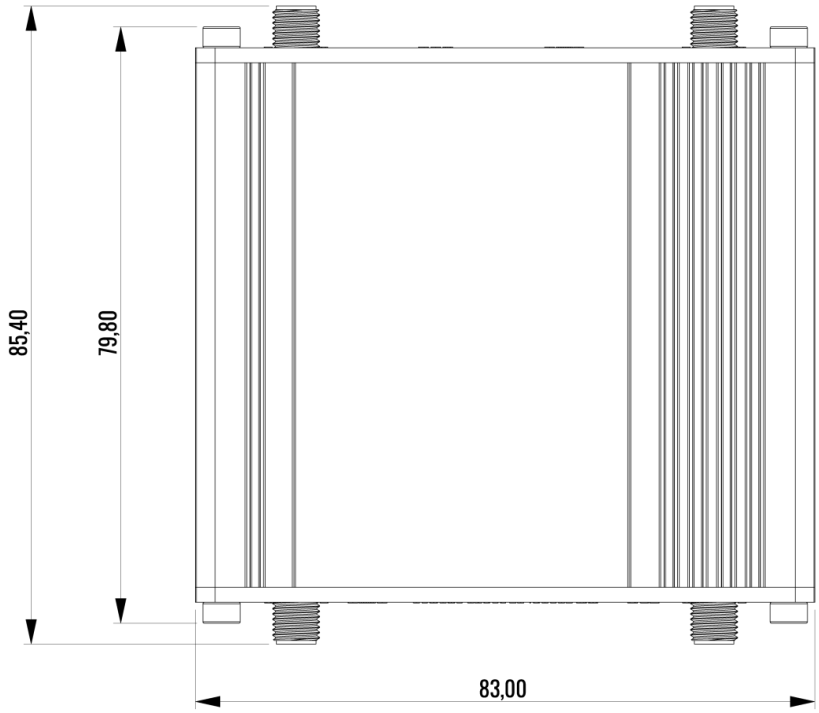

REAR VIEW

The figure below depicts the measurements of device and its components as seen from the back panel side:

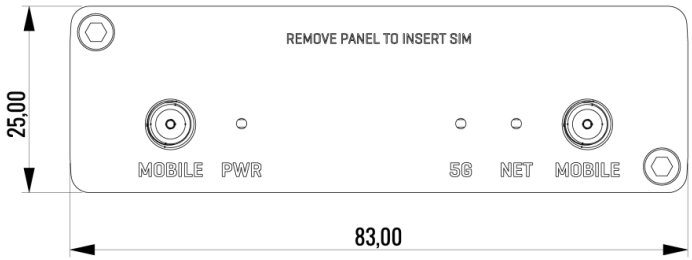

Copyright © 2025, UAB TELTONIKA NETWORKS. Specifications and information given in this document are subject to change by UAB TELTONIKA NETWORKS without prior notice.

FRONT VIEW

The figure below depicts the measurements of device and its components as seen from the front panel side:

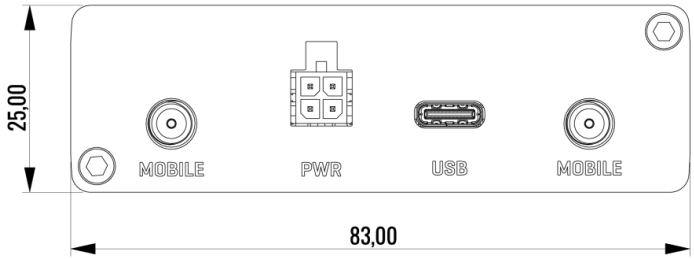

MOUNTING SPACE REQUIREMENTS

The figure below depicts an approximation of the device's dimensions when cables and antennas are attached:

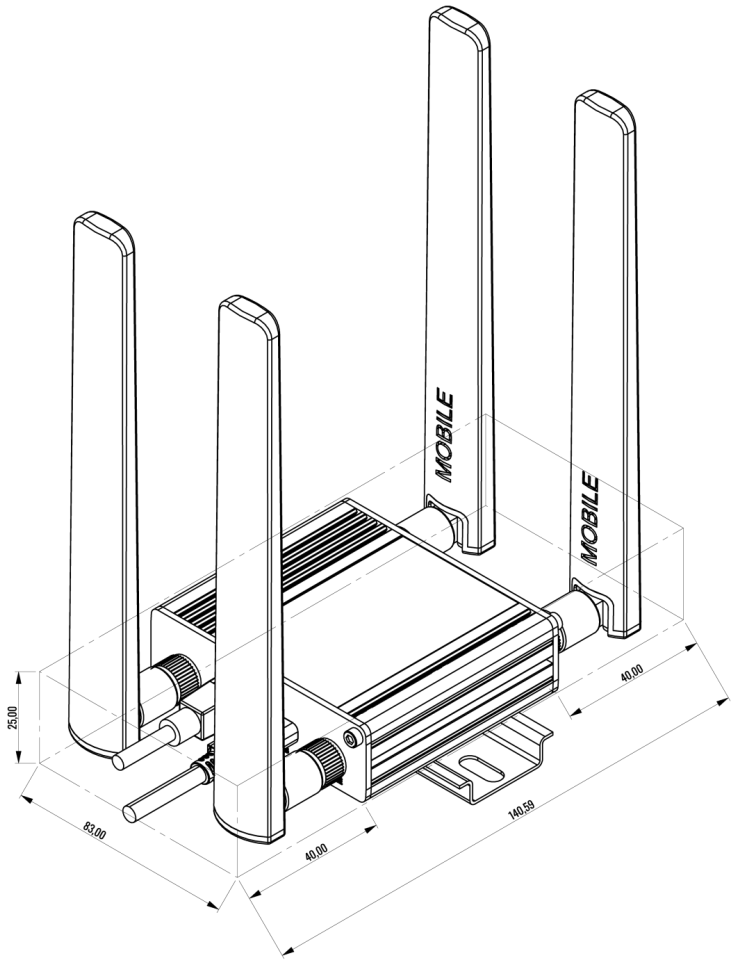

Copyright © 2025, UAB TELTONIKA NETWORKS. Specifications and information given in this document are subject to change by UAB TELTONIKA NETWORKS without prior notice.

DIN RAIL

The scheme below depicts protrusion measurements of an attached DIN Rail:

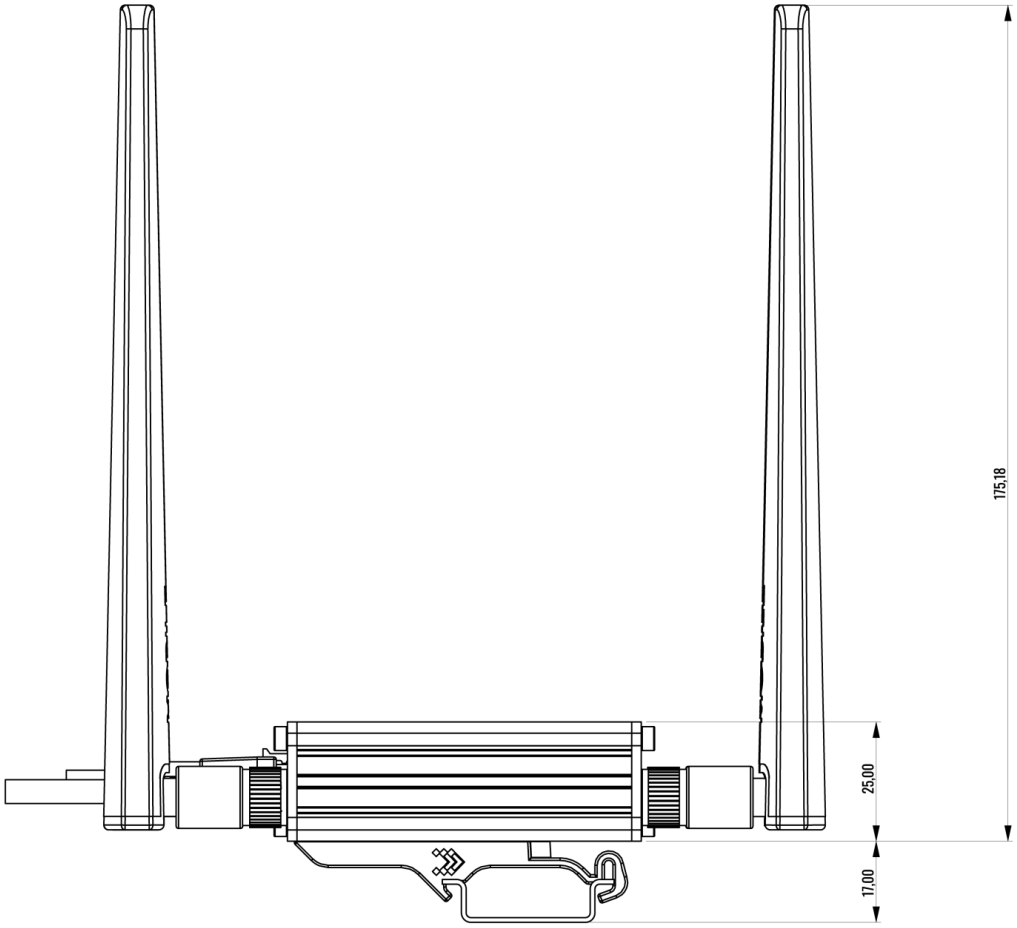

Copyright © 2025, UAB TELTONIKA NETWORKS. Specifications and information given in this document are subject to change by UAB TELTONIKA NETWORKS without prior notice.