Technical Data
Data Sheet N2417, REV.D

S4D30120H
1200V SIC POWER SCHOTTKY RECTIFIER

TO-247AC(TO-247-2)

Description

S4D30120H is a SiC Schottky rectifier packaged in TO-247AC(TO-247-2) case. The device is high voltage Schottky rectifier that has very low total conduction losses and very stable switching characteristics over temperature extremes. The S4D30120H is ideal for energy sensitive, high frequency applications in challenging environments.

Circuit Diagram

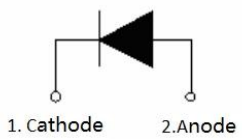

Features

- 175°C T_J operation
- Ultra-low switching loss
- Switching speeds independent of operating temperature
- Low total conduction losses
- High forward surge current capability
- High package isolation voltage
- Terminals finish: 100% Pure Tin
- "-A" is an AEC-Q101 qualified device
- Pb − Free Device
- All SMC parts are traceable to the wafer lot
- Additional electrical and life testing can be performed upon request

Applications

- Alternative energy inverters
- Power Factor Correction (PFC)
- Free-Wheeling diodes
- Switching supply output rectification
- Reverse polarity protection

Maximum Ratings

Characteristics	Symbol	Condition	Max.	Units
Peak Repetitive Reverse Voltage Working Peak Reverse Voltage DC Blocking Voltage	V_{RRM} V_{RWM} V_R	-	1200	V
Average Rectified Forward Current	$I_{F(AV)1}$	T_C =25°C	94	A
	$I_{F(AV)2}$	T_C =155°C	30	A
Peak One Cycle Non-Repetitive Surge Current	I_{FSM1}	10ms, Half Sine pulse, T_C =25°C	300	A
	I_{FSM2}	10ms, Half Sine pulse, T_C =110°C	246	A
Repetitive Peak Forward Surge Current	I_{FRM1}	10ms, Half Sine pulse , T_C =25°C	121	A
	I_{FRM2}	10ms, Half Sine pulse , T_C =110°C	68	A
Power Dissipation	P_{tot1}	T_C =25℃	441	W
	P_{tot2}	T_C =110℃	191	W
I^2t Value	$\int i^2t1$	10ms, Tc=25℃	271	A^2s
	$\int i^2t2$	10ms, Tc=25℃	218	A^2s

sales@prom-elec.com / ООО ПРОМЭЛЕКТРОНИКА

Technical Data
Data Sheet N2417, REV.D

RoHS Pb

Electrical Characteristics:

Characteristics	Symbol	Condition	Typ.	Max.	Units
Forward Voltage Drop*	V_{F1}	@ 30A, Pulse, T_J = 25 °C	1.5	1.8	V
	V_{F2}	@ 30A, Pulse, T_J = 175 °C	2.2	3.0	V
Reverse Current*	I_{R1}	@V_R = rated V_R, T_J = 25 °C	1	20	uA
	I_{R2}	@V_R = rated V_R, T_J = 175 °C	5	200	uA
Junction Capacitance	C_T	VR=0V, f=1MHz, Tj=25℃,	2581	-	pF
Reverse Recovery Charge	Q_c	V_R = 800 V, T_J =25°C	152	-	nC
Capacitance Stored Energy	E_C	V_R = 800 V, T_J =25°C	44	-	μJ

* Pulse width < 300 μs, duty cycle < 2%

Thermal-Mechanical Specifications:

Characteristics	Symbol	Condition	Specification	Units
Junction Temperature	T_J	-	-55 to +175	°C
Storage Temperature	T_{stg}	-	-55 to +175	°C
Typical Thermal Resistance Junction to Case	$R_{\theta JC}$	DC operation, Tj=25℃	0.34	°C/W

Electrostatic Discharge (ESD) Classifications:

Parameter	Symbol	Value
Human Body Model	HBM	Class 3B (≥ 8000 V)
Charge Device Model	CDM	Class C3 (≥ 1000 V)

Ordering Information

Device	Package	Shipping
S4D30120H	TO-247AC(TO-247-2)	25pcs / tube

Ratings and Characteristics Curves

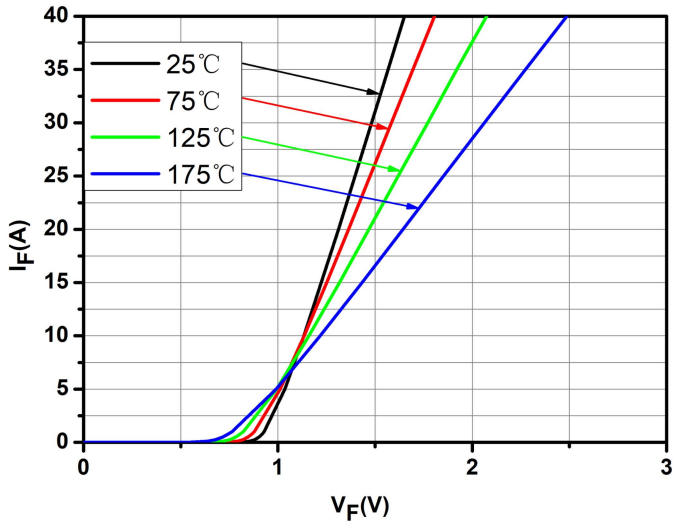

Fig.1-Typical Forward Voltage Characteristics

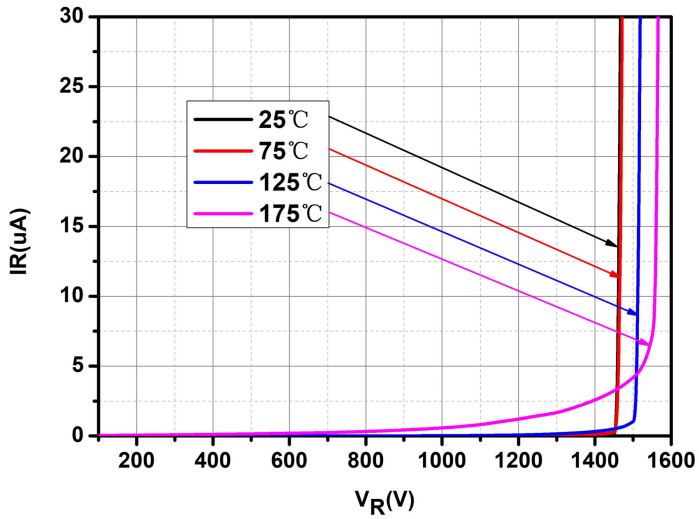

Fig.2-Typical Reverse Characteristics

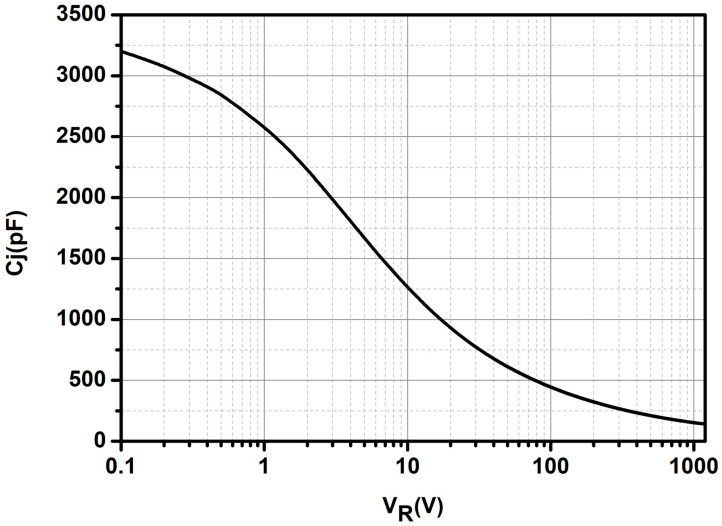

Fig.3-Capacitance vs. Reverse Voltage

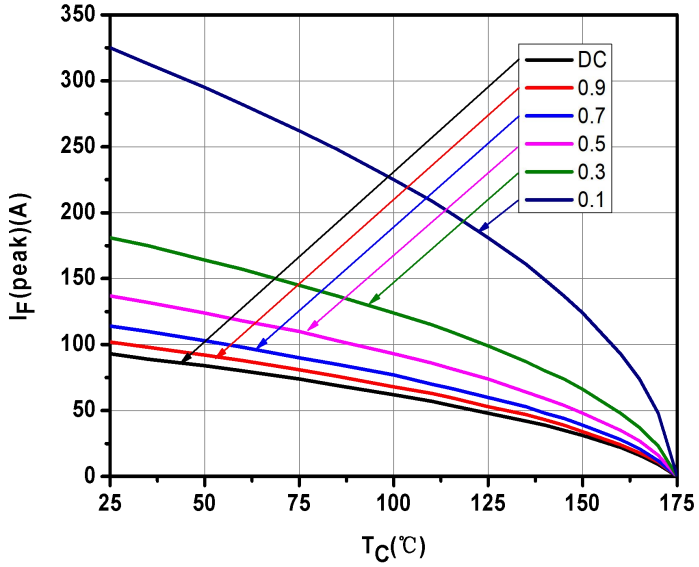

Fig.4-Current Derating

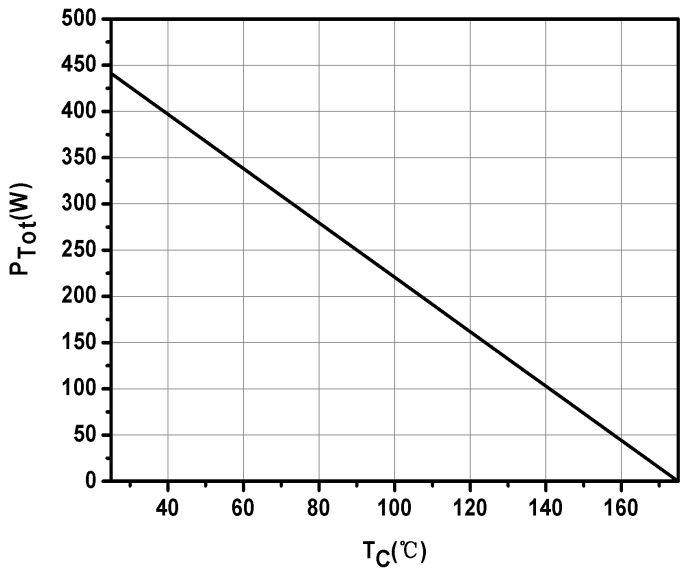

Fig.5-Power Derating

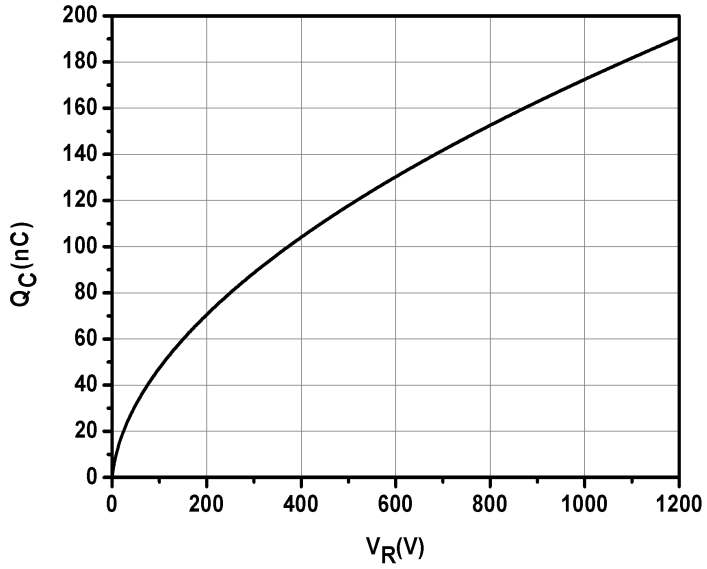

Fig.6-Total Capacitance Charge vs. Reverse Voltage

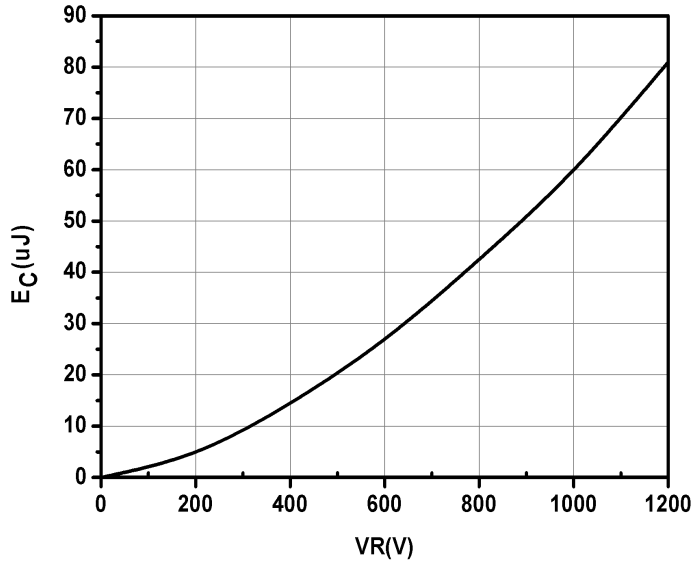

Fig.7-Capacitance Stored Energy

Technical Data
Data Sheet N2417, REV.D

RoHS Pb

Marking Diagram

Where XXXXX is YYWWL

S4D	= Device Type
H	= Package type
30	= Forward Current (30A)
120	= Reverse Voltage (1200V)
SSG	= SSG
YY	= Year
WW	= Week
L	= Lot Number

Cautions: Molding resin
Epoxy resin UL:94V-0

Tube Specification(TO-247AC(TO-247-2)

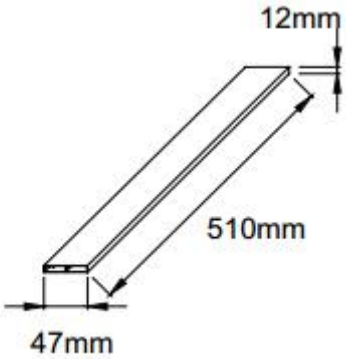

Mechanical Dimensions TO-247AC(TO-247-2)

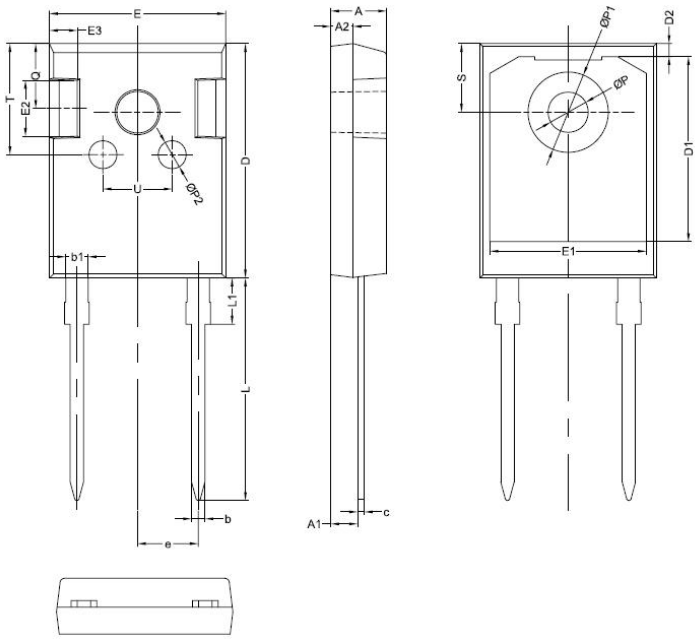

SYMBOL	Millimeters		
	MIN.	TYP.	MAX.
A	4.80	5.00	5.20
A1	2.20	2.41	2.61
A2	1.90	2.00	2.10
b	1.10	1.20	1.35
b1	1.80	2.00	2.20
c	0.50	0.60	0.75
D	20.30	21.00	21.20
D1		16.58	
D2		1.17	
E	15.60	15.80	16.00
E1		14.02	
E2		5.00	
E3		2.50	
e		5.44	
L	19.42	19.92	20.42
L1		4.13	
P	3.50	3.60	3.70
P1	7.1	7.19	7.40
P2		2.50	
Q		5.80	
S	6.05	6.15	6.25
T		10.00	
U		6.20	

Technical Data
Data Sheet N2417, REV.D

DISCLAIMER:
1- The information given herein, including the specifications and dimensions, is subject to change without prior notice to improve product characteristics. Before ordering, purchasers are advised to contact the SMC Diode Solutions sales department for the latest version of the datasheet(s).
2- In cases where extremely high reliability is required (such as use in nuclear power control, aerospace and aviation, traffic equipment, medical equipment , and safety equipment) , safety should be ensured by using semiconductor devices that feature assured safety or by means of users' fail-safe precautions or other arrangement .
3- In no event shall SMC Diode Solutions be liable for any damages that may result from an accident or any other cause during operation of the user's units according to the datasheet(s). SMC Diode Solution assumes no responsibility for any intellectual property claims or any other problems that may result from applications of information, products or circuits described in the datasheets.
4- In no event shall SMC Diode Solutions be liable for any failure in a semiconductor device or any secondary damage resulting from use at a value exceeding the absolute maximum rating.
5- No license is granted by the datasheet(s) under any patents or other rights of any third party or SMC Diode Solutions.
6- The datasheet(s) may not be reproduced or duplicated, in any form, in whole or part, without the expressed written permission of SMC Diode Solutions.
7- The products (technologies) described in the datasheet(s) are not to be provided to any party whose purpose in their application will hinder maintenance of international peace and safety nor are they to be applied to that purpose by their direct purchasers or any third party. When exporting these products (technologies), the necessary procedures are to be taken in accordance with related laws and regulations.