RCI374T30

Weidmüller Interface GmbH & Co. KG
Klingenbergstraße 26
D-32758 Detmold
Germany

www.weidmueller.com

Product image

Similar to illustration

Individual relays within the RIDERSERIES RCI
- 1 CO contact
- AC coils
- With integrated status LED and test button

General ordering data

Version	RIDERSERIES RCI, Relay, Number of contacts: 1, CO contact AgNi, Rated control voltage: 230 V AC, Continuous current: 16 A, Plug-in connection, Test button available: Yes
Order No.	8870300000
Type	RCI374T30
GTIN (EAN)	4032248613687
Qty.	10 pc(s).

sales@prom-elec.com / ООО ПРОМЭЛЕКТРОНИКА

RCI374T30

Weidmüller Interface GmbH & Co. KG
Klingenbergstraße 26
D-32758 Detmold
Germany

www.weidmueller.com

Technical data

Dimensions and weights

Depth	26.7 mm	Depth (inches)	1.051 inch
Height	29 mm	Height (inches)	1.142 inch
Width	13 mm	Width (inches)	0.512 inch
Net weight	14.03 g		

Temperatures

Storage temperature	-40 °C...85 °C	Operating temperature	-40 °C...70 °C
Humidity	40 °C / 93 % rel. humidity, no condensation		

Rated data UL

Certificate No. (cURus)	E224238

Control side

Rated control voltage	230 V AC	Rated current AC	3.5 mA
Power rating	813 mVA	Pull-in/drop-out voltage, typ.	172.5 V / 34.5 V AC
Coil resistance	32500 Ω ± 15 %	Coil tolerance	15 %
Status indicator	red LED		

Load side

Rated switching voltage	240 V AC	Continuous current	16 A
Max. switching frequency at rated load	0.1 Hz	Inrush current	30 A / 4 s
AC switching capacity (resistive), max.	4000 VA	DC switching capacity (resistive), max.	384 W @ 24 V
Switch-on delay	≤ 8 ms	Switch-off delay	≤ 6 ms
Contact type	1 CO contact (AgNi)	Mechanical service life	AC coil 5 x 10^6 switching cycles, DC coil 10 x 10^6 switching cycles
Min. switching power	1 mA @ 24 V, 10 mA @ 12 V, 100 mA @ 5 V		

General data

Test button available	Yes	Version of test button	lockable, just when removing the detend lock, Momentary test button
Mechanical switch position indicator	Yes	Colour	Transparent
UL 94 flammability rating	V-2		

Insulation coordination

Rated voltage	250 V	Pollution severity	2
Surge voltage category	III	Insulating material group	IIIa
Clearance and creepage distances for control side - load side	≥ 8 mm	Dielectric strength for control side - load side	5 kV_{eff} / 1min
Dielectric strength of open contact	1 kV_{eff} / 1 min	Impulse withstand voltage	5 kV (1.2/50 µs)

Further details of approvals / standards

Standards	IEC 61810-1, UL508	Certificate No. (CSA)	249409-2426937
Certificate No. (VDE)	40018043	Certificate No. (cURus)	E224238

RCI374T30

Weidmüller Interface GmbH & Co. KG
Klingenbergstraße 26
D-32758 Detmold
Germany

www.weidmueller.com

Technical data

Connection data

Wire connection method	Plug-in connection	Pitch in mm (P)	5 mm

Classifications

ETIM 6.0	EC001437	ETIM 7.0	EC001437
ETIM 8.0	EC001437	ECLASS 9.0	27-37-16-01
ECLASS 9.1	27-37-16-01	ECLASS 10.0	27-37-16-01
ECLASS 11.0	27-37-16-01	ECLASS 12.0	27-37-16-01

Approvals

Approvals	
ROHS	Conform
UL File Number Search	UL Website
Certificate No. (cURus)	E224238

Downloads

Approval/Certificate/Document of Conformity	EU Konformitätserklärung / EU Declaration of Conformity
Engineering Data	CAD data – STEP
Engineering Data	EPLAN, WSCAD
Product Change Notification	20220511 Product consolidation RIDERSERIES RCI relays 20220511 Produktkonsolidierung RIDERSERIES RCI Relais
Catalogues	Catalogues in PDF-format
Brochures	

RCI374T30

Weidmüller Interface GmbH & Co. KG
Klingenbergstraße 26
D-32758 Detmold
Germany

www.weidmueller.com

Drawings

Wiring diagram

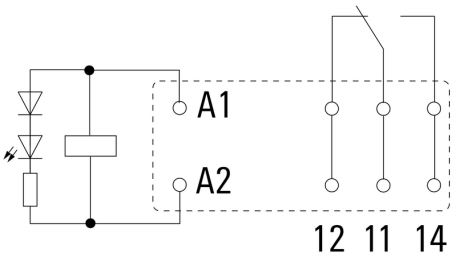

View of Pins from below

Graph

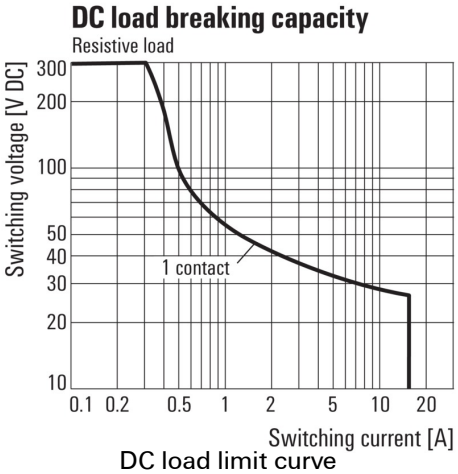

DC load limit curve
Resistive load

Graph

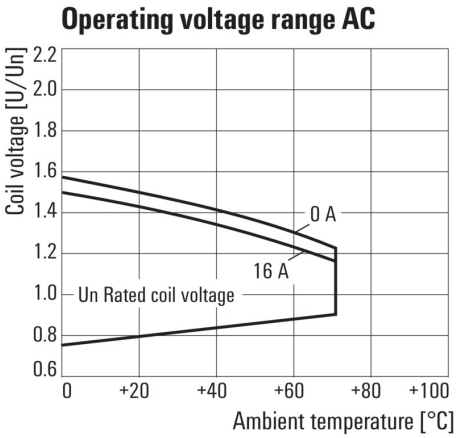

AC operational voltage range

Graph

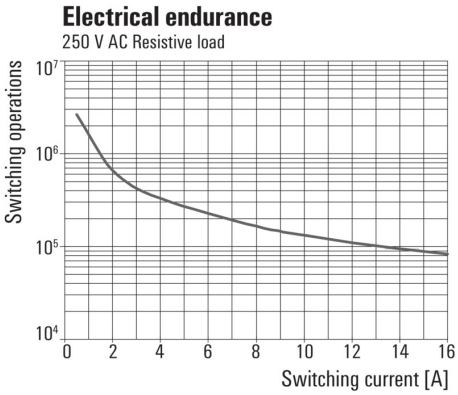

Electrical service life
250 V AC resistive load

Dimensional drawing

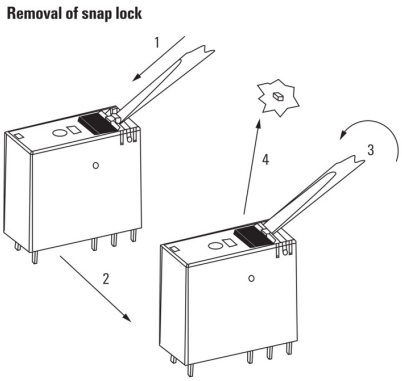

Detailed drawing
Removal of the test button detent lock

Derating curve

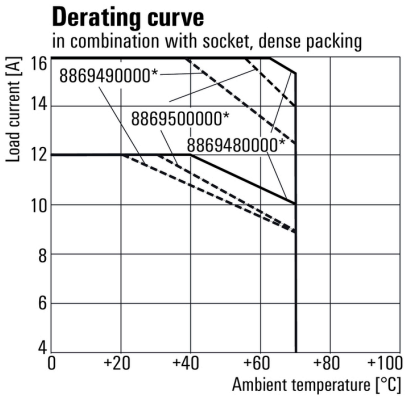

* For full continuous current (16 A), the wire terminals 11 with 21, 12 with 22 and 14 with 24 must be bridged with a wire ≥ 1,5 mm² at the socket.

Relay in combination with base

RCI374T30

Weidmüller Interface GmbH & Co. KG
Klingenbergstraße 26
D-32758 Detmold
Germany

www.weidmueller.com

Drawings

Dimensional drawing

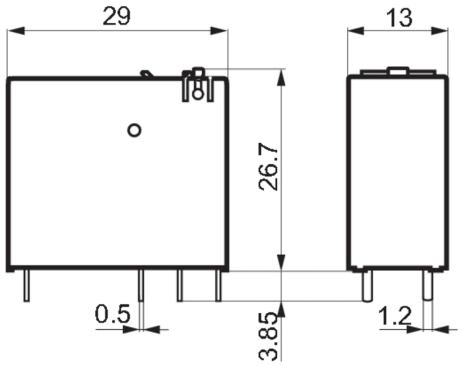

Miscellaneous

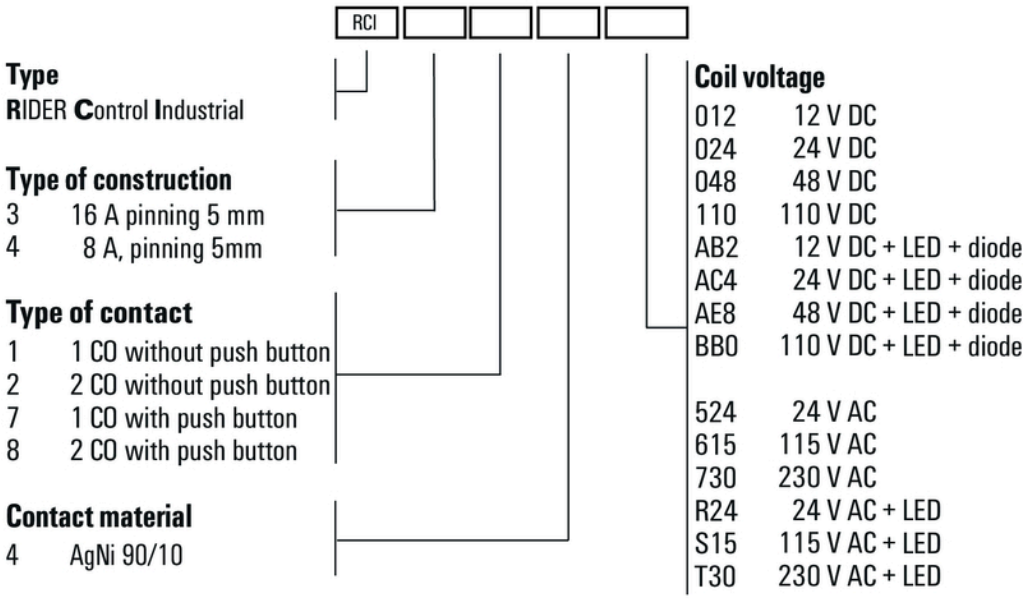

Type codes