datasheet for KLEPS 3 ST
article number: 973592100

SKS Kontakttechnik GmbH

product description:	order number: 973 592-100
description:	Miniature clamp-type test probe with rotating grip jaws. Suitable for very thin wires and densely packed contacts. Connects with MKL... and MAL...
typ:	KLEPS 3 ST schwarz / black
system:	0.64mm system
order number:	973 592-100
clamping range:	3.5 mm
clamping typ:	rotating grip jaws
color	●
other color versions:	●●
technical data	
measurement category acc. to IEC 61010:	CAT I
type of termination:	unsprung pin Ø 0.64 mm
rated voltage:	30 VAC / 60 VDC
rated current: **Please consider derating curve!**	2 A
contact resistance:	10 mOhm
material	
contact material:	grip jaws: spring steel pin: brass
contact surface material:	grip jaw: tin pin: gold
housing material:	PBT
environmental conditions:	
temperature range:	-25 °C to +100 °C
inflammable class:	
housing (basic material):	UL 94 HB
drawing	

Copyright ©2013 SKS Kontakttechnik GmbH / Neue Schichtstr. 14 / D-09366 Niederdorf (printed: Wed Aug 14 2013 10:44:48)

sales@prom-elec.com / ООО ПРОМЭЛЕКТРОНИКА

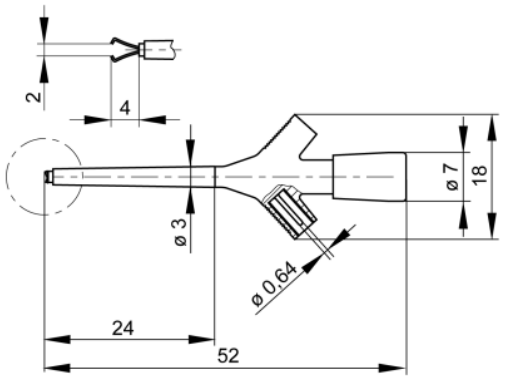
2
4
ø 3
ø 7
18
ø 0,64
24
52