4D LCD PTY LTD
UNIT 7, 103 SARGENTS RD
MINCHINBURY, NSW 2770
AUSTRALIA
www.4dlcd.com

4DLCD-50800480-IPS-[RTP/CTP]-[CLB]

5.0” TFT Liquid Crystal Display

DATASHEET

Document Date: 23rd June 2021
Document Revision: 1.3

Uncontrolled copy when printed or downloaded
Please refer to the 4DLCD website for the latest Revision of this Document

sales@prom-elec.com / ООО ПРОМЭЛЕКТРОНИКА

Revision History

REVISION	DATE	COMMENT	REMARKS
1.2	22/02/2021	Initial Version of IPS Datasheet	Initial Version
1.3	23/06/2021	Added logic current consumption data, added backlight circuit example.	

Table of Contents

1. General Specification 3
2. TFT LCD Display Drawing (Non Touch Version) 4
3. TFT LCD Display Drawing (Resistive Touch Version) 5
4. TFT LCD Display Drawing (Capacitive Touch Version) 6
5. TFT LCD Display Drawing (Capacitive Touch Version with Cover Lens Bezel) 7
6. Absolute Maximum Ratings 8
7. Electrical Characteristics 8
8. Electro-Optical Characteristics 8
9. Backlight Characteristics 9
10. Interface Descriptions 11
    10.1 LCD Interface 11
    10.2 CTP Interface 12
11. Backlight Example Circuit 13
12. LCD Timing Details 14
    12.1 Timing Chart 14
    12.2 Timing Characteristic 15
    12.3 SYNC Mode Timing Diagram 15
    12.4 SYNC-DE Mode Timing Diagram 15
    12.5 Reset Timing 16
    12.6 Power On Sequence 16
    12.7 Power-off Sequence 17
13. Reliability Test 18
14. Precautions for Using LCD Modules 19
    14.1 Handing Precautions 19
    14.2 Storage Precautions 20
15. Legal Information 21

1. General Specification

4DLCD-50800480-IPS is a colour active matrix LCD module incorporating amorphous silicon TFT IPS (Thin Film Transistor). It is composed of a colour TFT-LCD panel, driver IC, FPC and a back light unit and with/without a Resistive/Capacitive Touch Panel (RTP or CTP), and with/without a Cover Lens Bezel (CLB). The module display area contains 800 x 480 pixels. This product accords with RoHS environmental criterion.

ITEM		CONTENTS	UNIT
LCD Type		TFT / Transmissive / IPS	
Size		5.0	Inch
Viewing Direction		ALL	
Display Mode		Normally Black	
LCD (W × H × T)	4DLCD-50800480	120.70 x 75.80 x 3.0	mm
	4DLCD-50800480-RTP	120.70 x 75.80 x 4.2	
	4DLCD-50800480-CTP	120.70 x 75.80 x 4.63	
	4DLCD-50800480-CTP-CLB	140.70 x 93.83 x 4.63 (Including CLB)	
Active Area (W × H)		108.00 × 64.80	mm
Dot Pitch (W × H)		0.135 × 0.135	mm
Number of Dots (Pixels)		800 (RGB) × 480	
Driver IC		SC7262A	
Backlight Type		18 LEDs	
Surface Luminance	4DLCD-50800480	600 (typical)	cd/m^2
	4DLCD-50800480-RTP	510 (typical)	
	4DLCD-50800480-CTP	540 (typical)	
	4DLCD-50800480-CTP-CLB	540 (typical)	
Interface Type		Parallel RGB 24-bit	
Color Depth		16.7M	
Pixel Arrangement		RGB Vertical Stripe	
Surface Treatment		AG	
Input Voltage		3.3 (typical)	V
With/Without TP (Touch Panel)		4DLCD-50800480-IPS – Without TP 4DLCD-50800480-IPS-RTP – With Resistive Touch 4DLCD-50800480-IPS-CTP – With Capacitive Touch 4DLCD-50800480-IPS-CTP-CLB – With Capacitive Touch and Cover Lens Bezel	
Weight	4DLCD-50800480	55.2	g
	4DLCD-50800480-RTP	74.6	
	4DLCD-50800480-CTP	82.0	
	4DLCD-50800480-CTP-CLB	98.6	

Note 1: RoHS compliant
Note 2: LCD weight tolerance: ± 5%.

Part Number Details:

4DLCD	4D Systems LCD Display
50800480	5.0 inch, 800 x 480 Resolution
RTP	Resistive Touch
CTP	Capacitive Touch
CLB	Cover Lens Bezel

2. TFT LCD Display Drawing (Non Touch Version)

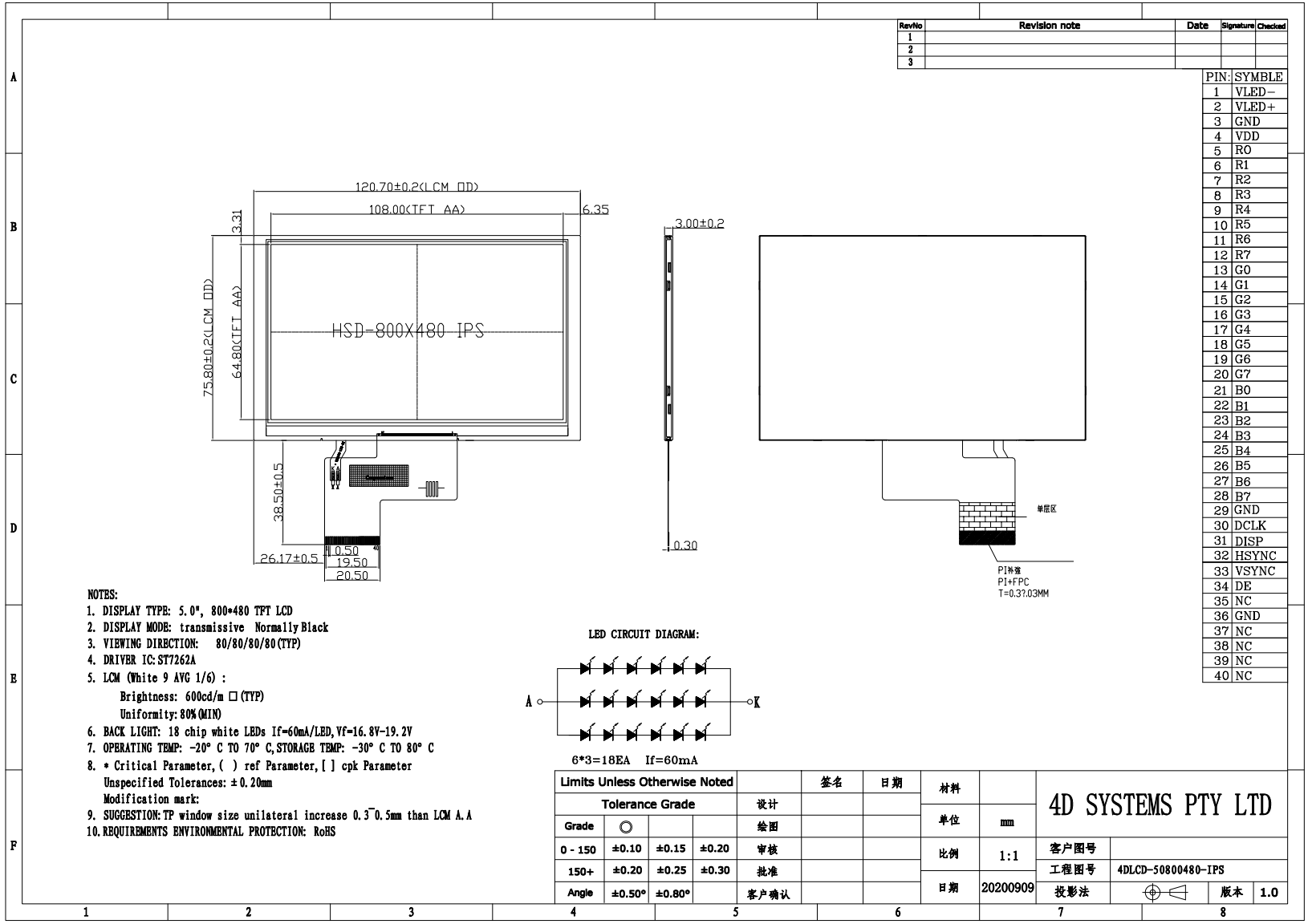

3. TFT LCD Display Drawing (Resistive Touch Version)

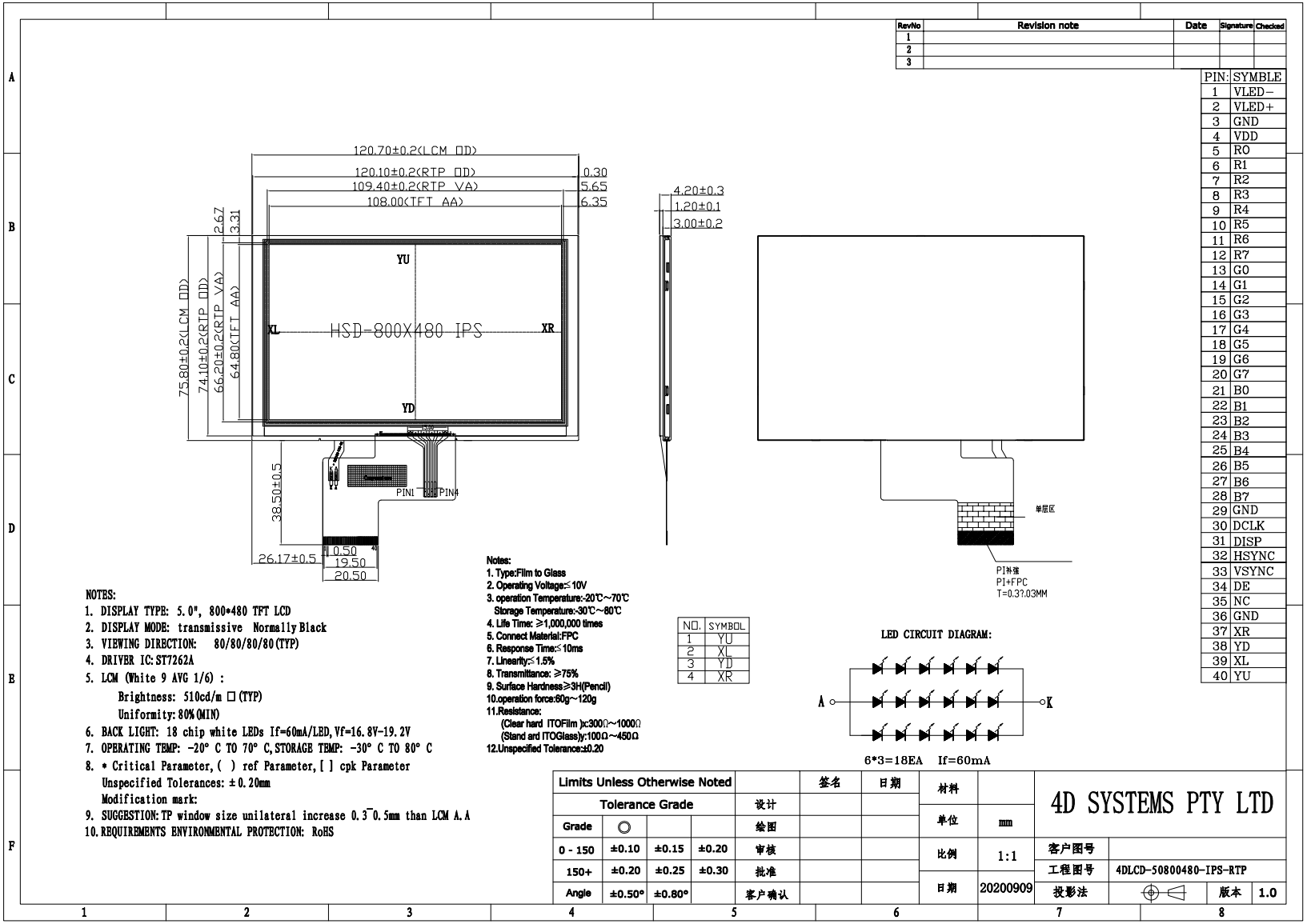

RevNo	Revision note	Date	Signature	Checked
1				
2				
3				

PIN:	SYMBLE
1	VLED-
2	VLED+
3	GND
4	VDD
5	R0
6	R1
7	R2
8	R3
9	R4
10	R5
11	R6
12	R7
13	G0
14	G1
15	G2
16	G3
17	G4
18	G5
19	G6
20	G7
21	B0
22	B1
23	B2
24	B3
25	B4
26	B5
27	B6
28	B7
29	GND
30	DCLK
31	DISP
32	HSYNC
33	VSYNC
34	DE
35	NC
36	GND
37	XR
38	YD
39	XL
40	YU

NO.	SYMBOL
1	YU
2	XL
3	YD
4	XR

4. TFT LCD Display Drawing (Capacitive Touch Version)

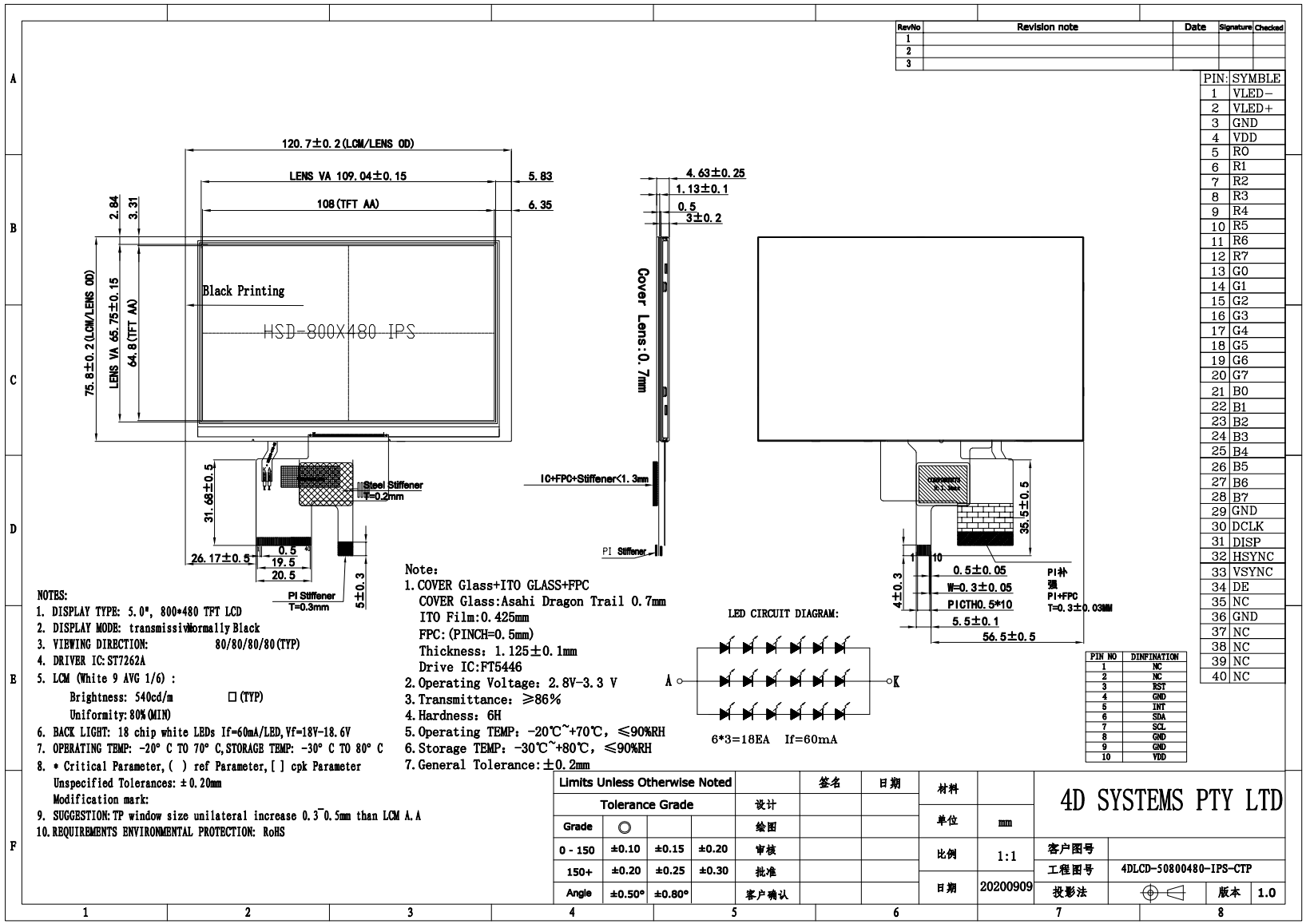

5. TFT LCD Display Drawing (Capacitive Touch Version with Cover Lens Bezel)

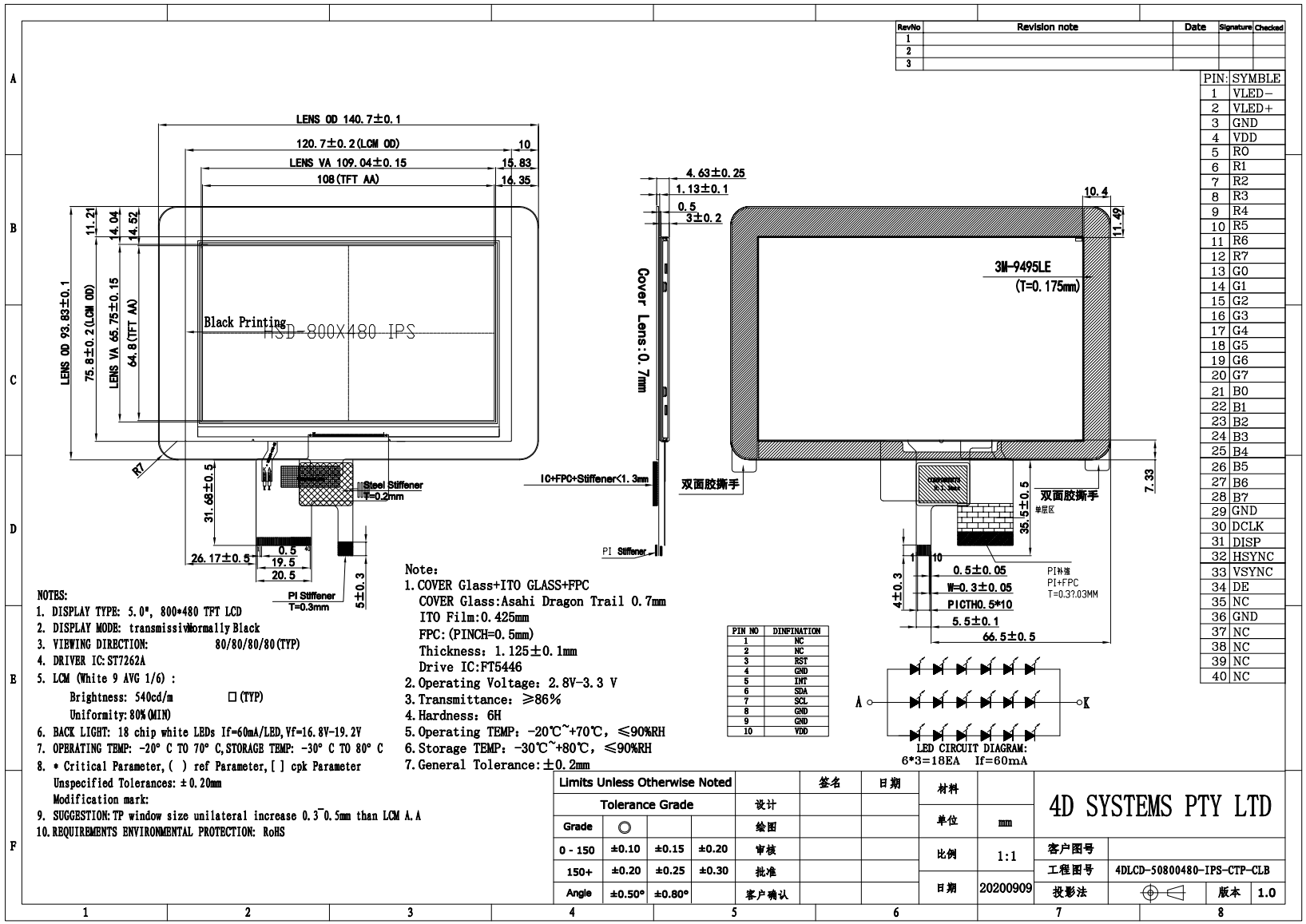

RevNo	Revision note	Date	Signature	Checked
1				
2				
3				

PIN:	SYMBLE
1	VLED−
2	VLED+
3	GND
4	VDD
5	R0
6	R1
7	R2
8	R3
9	R4
10	R5
11	R6
12	R7
13	G0
14	G1
15	G2
16	G3
17	G4
18	G5
19	G6
20	G7
21	B0
22	B1
23	B2
24	B3
25	B4
26	B5
27	B6
28	B7
29	GND
30	DCLK
31	DISP
32	HSYNC
33	VSYNC
34	DE
35	NC
36	GND
37	NC
38	NC
39	NC
40	NC

PIN NO	DINFINATION
1	NC
2	NC
3	RST
4	GND
5	INT
6	SDA
7	SCL
8	GND
9	GND
10	VDD

NOTES:
1. DISPLAY TYPE: 5.0", 800*480 TFT LCD
2. DISPLAY MODE: transmissivNormally Black
3. VIEWING DIRECTION: 80/80/80/80(TYP)
4. DRIVER IC:ST7262A
5. LCM (White 9 AVG 1/6) :
   Brightness: 540cd/m □(TYP)
   Uniformity:80%(MIN)
6. BACK LIGHT: 18 chip white LEDs If=60mA/LED,Vf=16.8V-19.2V
7. OPERATING TEMP: -20° C TO 70° C,STORAGE TEMP: -30° C TO 80° C
8. * Critical Parameter,( ) ref Parameter,[ ] cpk Parameter
   Unspecified Tolerances: ±0.20mm
   Modification mark:
9. SUGGESTION:TP window size unilateral increase 0.3~0.5mm than LCM A.A
10. REQUIREMENTS ENVIRONMENTAL PROTECTION: RoHS

Note:
1. COVER Glass+ITO GLASS+FPC
   COVER Glass:Asahi Dragon Trail 0.7mm
   ITO Film:0.425mm
   FPC:(PINCH=0.5mm)
   Thickness: 1.125±0.1mm
   Drive IC:FT5446
2. Operating Voltage: 2.8V-3.3 V
3. Transmittance: ≥86%
4. Hardness: 6H
5. Operating TEMP: -20℃~+70℃, ≤90%RH
6. Storage TEMP: -30℃~+80℃, ≤90%RH
7. General Tolerance:±0.2mm

6. Absolute Maximum Ratings

PARAMETER	SYMBOL	MIN	MAX	UNIT
Supply Voltage for LCD Logic	VDD/VCC	-0.3	4.0	V
Supply Voltage for TP Logic	VDD/VCC-VSS	-	3.6	V
Input Voltage for Logic	VIN	VSS-0.5	VDD	V
LED forward voltage (each LED)	IF	-	25	mA
Operating Temperature	T_{OP}	-20	70	°C
Storage Temperature	T_{ST}	-30	80	°C
Humidity	RH	-	90% (Max 60°C)	RH

7. Electrical Characteristics

PARAMETER	SYMBOL	MIN	TYP	MAX	UNIT
Power Voltage	VDD/DCC	2.6	3.3	3.6	V
Input Current	IVDD	-	13	-	mA
Input Voltage 'H' Level	V_{IH}	0.7 VDD	-	VDD	V
Input Voltage 'L' Level	V_{IL}	0	-	0.3 VDD	V

8. Electro-Optical Characteristics

ITEM		SYM	CONDITION	MIN	TYP	MAX	UNIT	REMARK
Response Time		Tr+Tf	θ=0	-	30	40	ms	Figure 1 (4)
Contrast Ratio		Cr	°	800	1000	-	-	Figure 2 (1)
Luminance Uniformity		δ WHITE	Ø=0	75	80	-	%	Figure 2 (3)
Surface Luminance		Lv	4DLCD-50800480	-	600	-	cd/m2	Figure 2 (2)
			4DLCD-50800480-RTP	-	510	-		
			4DLCD-50800480-CTP	-	540	-		
			4DLCD-50800480-CTP-CLB	-	540	-		
Viewing Angle Range		θ	Ø = 90°	70	80	-	deg	Figure 3 (6)
			Ø = 270°	70	80	-	deg	
			Ø = 0°	70	80	-	deg	
			Ø = 180°	70	80	-	deg	
CIE (x,y) Cromacity	Red	x	θ=0° Ø=0° Ta=25	-0.1	0.629	+0.1		Figure 2 (5)
		y			0.326			
	Green	x			0.337			
		y			0.546			
	Blue	x			0.136			
		y			0.143			
	White	x			0.320			
		y			0.345			

9. Backlight Characteristics

PARAMETER	SYMBOL	MIN	TYP	MAX	UNIT
Voltage for LED backlight (each LED)	V_I	2.8	3.0	3.2	V
Voltage for LED backlight (entire String – 18 LED's)	$V_{ISTRING}$	16.8	18.0	19.2	V
Current for LED backlight (each LED)	I_I	-	20	25	mA
Current for LED backlight (entire String – 18 LED's)	$I_{ISTRING}$	-	60	75	mA
LED Life Time	-	30000	-	-	Hrs

Note: The LED life time is defined as the module brightness decrease to 50% original brightness at Ta=25°C.

Note 1: Contrast Ratio(CR) is defined mathematically as below, for more information see Figure 1.

$$\text{Contrast Ratio} = \frac{\text{Average Surface Luminance with all white pixels (P1, P2, P3, P4, P5)}}{\text{Average Surface Luminance with all black pixels (P1, P2, P3, P4, P5)}}$$

Note 2: Surface luminance is the LCD surface from the surface with all pixels displaying white.
For more information, see Figure 2.

Lv = Average Surface Luminance with all white pixels (P1, P2, P3, P4, P5)

Note 3: The uniformity in surface luminance δ WHITE is determined by measuring luminance at each test position 1 through 5, and then dividing the maximum luminance of 5 points luminance by minimum luminance of 5 points luminance. For more information, see Figure 2.

$$\delta\ \text{WHITE} = \frac{\text{Minimum Surface Luminance with all white pixels (P1, P2, P3, P4, P5)}}{\text{Maximum Surface Luminance with all white pixels (P1, P2, P3, P4, P5)}}$$

Note 4: Response time is the time required for the display to transition from white to black (Rise Time, Tr) and from black to white (Decay Time, Tf). For additional information see FIG 1. The test equipment is Autronic-Melchers ConoScope series.

Note 5: CIE (x, y) chromaticity, the x, y value is determined by measuring luminance at each test position 1 through 5, and then make average value.

Note 6: Viewing angle is the angle at which the contrast ratio is greater than 2. For TFT module the contrast ratio is greater than 10. The angles are determined for the horizontal or x axis and the vertical or y axis with respect to the z axis which is normal to the LCD surface. For more information, see Figure3.

Note 7: For viewing angle and response time testing, the testing data is based on Autronic-Melchers ConoScope series. Instruments for Contrast Ratio, Surface Luminance, Luminance Uniformity, CIE the test data is based on TOPCONs BM-5 photo detector.

Figure 1. The definition of response time

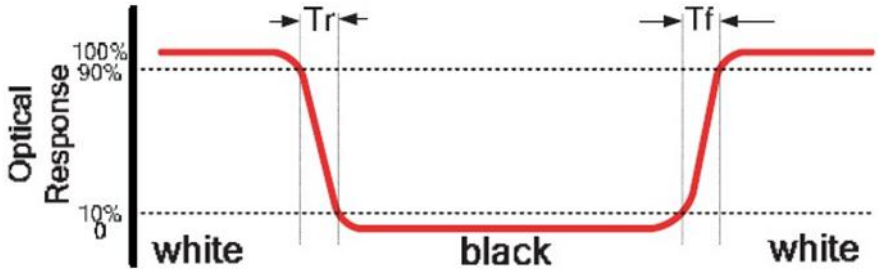

Figure 2. Measuring method for Contrast ratio, surface luminance, Luminance uniformity, CIE (x, y) chromaticity

A : 5 mm
B : 5 mm
H, V : Active Area
Light spot size ∅=5mm, 500mm distance from the LCD surface to detector lens
measurement instrument is TOPCON's luminance meter BM-5

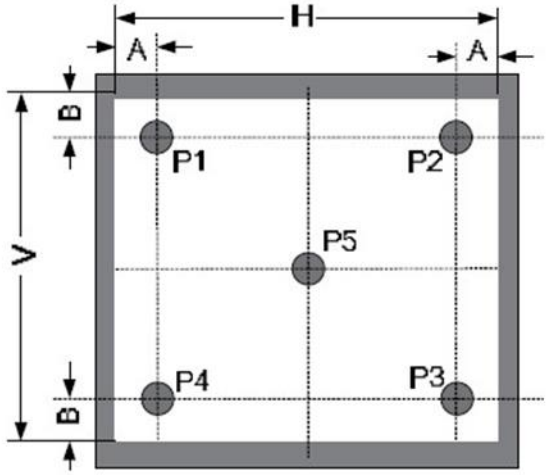

Figure 3. The definition of viewing angle

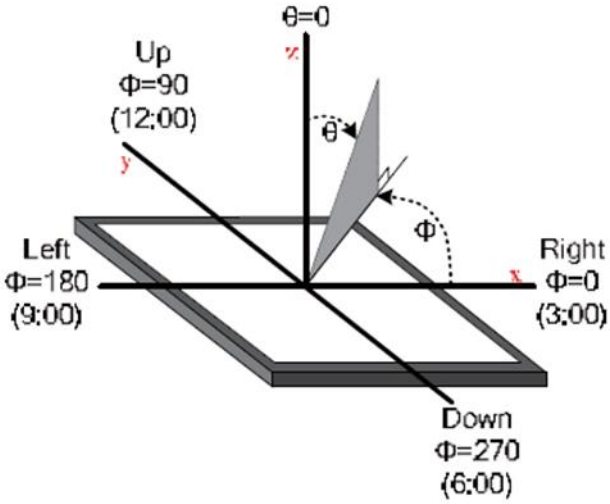

10. Interface Descriptions

10.1 LCD Interface

PIN NO.	SYMBOL	DESCRIPTION	REMARK
1	LED-	Cathode of LED Backlight	
2	LED+	Anode of LED Backlight	
3	GND	Ground	
4	DVDD	Power supply (Logic)	
5	R0	Red data input R0	Note1
6	R1	Red data input R1	Note1
7	R2	Red data input R2	Note1
8	R3	Red data input R3	Note1
9	R4	Red data input R4	Note1
10	R5	Red data input R5	Note1
11	R6	Red data input R6	Note1
12	R7	Red data input R7	Note1
13	G0	Green data input G0	Note1
14	G1	Green data input G1	Note1
15	G2	Green data input G2	Note1
16	G3	Green data input G3	Note1
17	G4	Green data input G4	Note1
18	G5	Green data input G5	Note1
19	G6	Green data input G6	Note1
20	G7	Green data input G7	Note1
21	B0	Blue data input B0	Note1
22	B1	Blue data input B1	Note1
23	B2	Blue data input B2	Note1
24	B3	Blue data input B3	Note1
25	B4	Blue data input B4	Note1
26	B5	Blue data input B5	Note1
27	B6	Blue data input B6	Note1
28	B7	Blue data input B7	Note1
29	GND	Ground	
30	DCLK	Clock for input data. Data latched at rising/falling edge of this signal. Default is falling edge.	
31	DISP	Standby mode control. (Normally pull high) STBYB=”L”, enter standby mode for power saving. Timing controller source driver will turn off, all outputs are Hi-Z. STBYB=”H”, normal operation.	
32	HS	Horizontal sync input	
33	VS	Vertical sync input	
34	DE	Input data enable control. When DE mode, active High to enable data input(Normally pull low)	
35	NC	No Connect	
36	GND	Ground	
37	XR	The touch panel X right pin (RTP only – NC for others)	Note2
38	YD	The touch panel Y down pin (RTP only – NC for others)	Note2
39	XL	The touch panel X left pin (RTP only – NC for others)	Note2
40	YU	The touch panel Y up pin (RTP only – NC for others)	Note2

Note1: For applications that uses less than 24 bits, pins are tied to ground to reduce the total bits used.
Note2: Pins 37, 38, 39 and, 40 are only applicable to touch screen displays (4DLCD-xxxxxxxx-RTP).

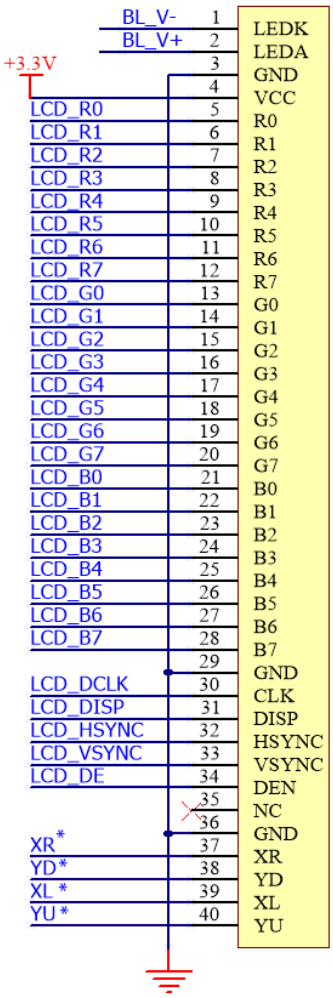

24 Bit mode

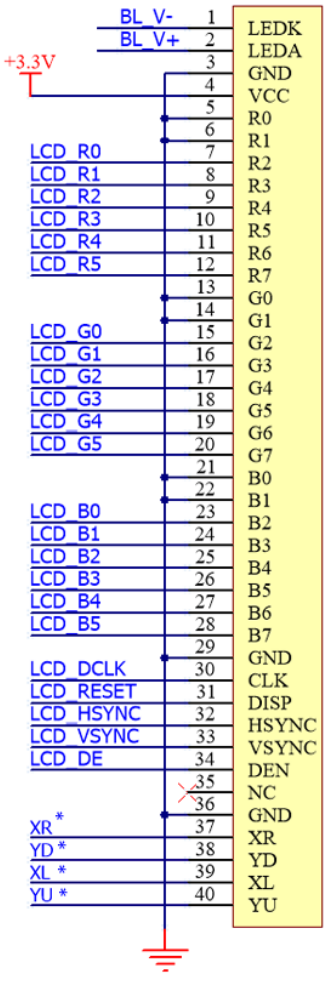

18 Bit mode

10.2 CTP Interface

PIN No.	SYMBOL	DESCRIPTION	REMARK
1	NC	No Connect	Only connected to the CTP Panel, not connected to the LCD itself N/A for Non-touch and RTP models.
2	NC	No Connect	
3	RST	Reset pin	
4	GND	Ground	
5	INT	Interrupt signal from CTP	
6	SDA	I2C SDA	
7	SCL	I2C SCL	
8	GND	Ground	
9	GND	Ground	
10	VDD	Power Supply (3.3V)	

The Capacitive Touch is driven by a **Focaltech FT5446** capacitive touch driver IC, which utilizes an I2C interface, and is capable of 5-point touch.

11. Backlight Example Circuit

The backlight circuit of this LCD needs an appropriate backlight driver. It can not be simply driven directly by a 3.3V or 5.0V supply like smaller displays, this is because of the number of LED's connected in series and parallel, which is known as an LED String. A backlight driver is required to boost the voltage from the input supply to the requirements for the LED string.

There are many backlight driver IC's on the market. Some examples are:

Texas Instruments TPS61165
Texas Instruments TPS61080
On-Semi FAN5333B

On selecting of the backlight driver, ensure it is capable of driving the number of LED's in the string featured in this display, and it supports the input voltage you are looking to supply. Often 3.3V or 5V is possible to supply into the backlight drivers, and it will boost it to the required output based on the requirements of the LED's. The current can then be set with a resistor. Please refer to the datasheet for the selected Driver IC of your choice.

In this example, the TPS61165 is depicted.

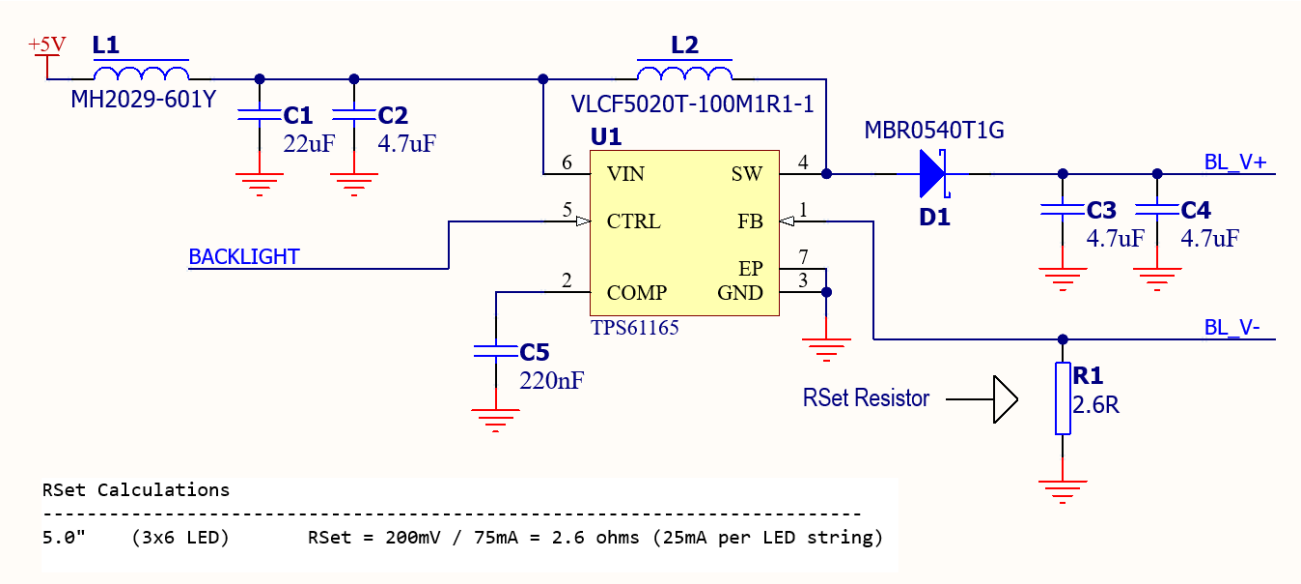

The RSet calculation is found in the Datasheet for the backlight driver. Each one will vary, as well as the circuit and the components required. Please refer to their datasheets.

Refer to Section 9 of this document for information specific to the backlight requirements, as well as the drawing of the display to see the configuration of the backlight LED string.

12. LCD Timing Details

12.1 Timing Chart

PARAMETER	SYMBOL	MIN	TYP	MAX	UNIT	CONDITION
CLK Clock Time	T_{clk}	1/Max(F_{CLK})	-	1/Min(F_{CLK})	ns	-
CLK Pulse Duty	T_{chw}	40	50	60	%	T_{CLK}
HSYNC to CLK	T_{hc}	-	-	1	CLK	-
HSYNC Width	T_{hwh}	1	-	-	CLK	-
VSYNC Width	T_{vwh}	1	-	-	ns	-
HSYNC Period Time	T_h	60	63.56	67	ns	-
VSYNC Set-up Time	T_{vst}	12	-	-	ns	-
VSYNC Hold Time	T_{vhd}	12	-	-	ns	-
HSYNC Setup Time	T_{hst}	12	-	-	ns	-
HSYNC Hold Time	T_{hhd}	12	-	-	ns	-
Data Set-up Time	T_{dsu}	12	-	-	ns	D00~D23 to CLK
Data Hold Time	T_{dhd}	12	-	-	ns	D00~D23 to CLK
DEN Set-up Time	T_{esu}	12	-	-	ns	DEN to CLK

Timing parameter (VDD=3.3V, GND=0V, Ta=25℃)

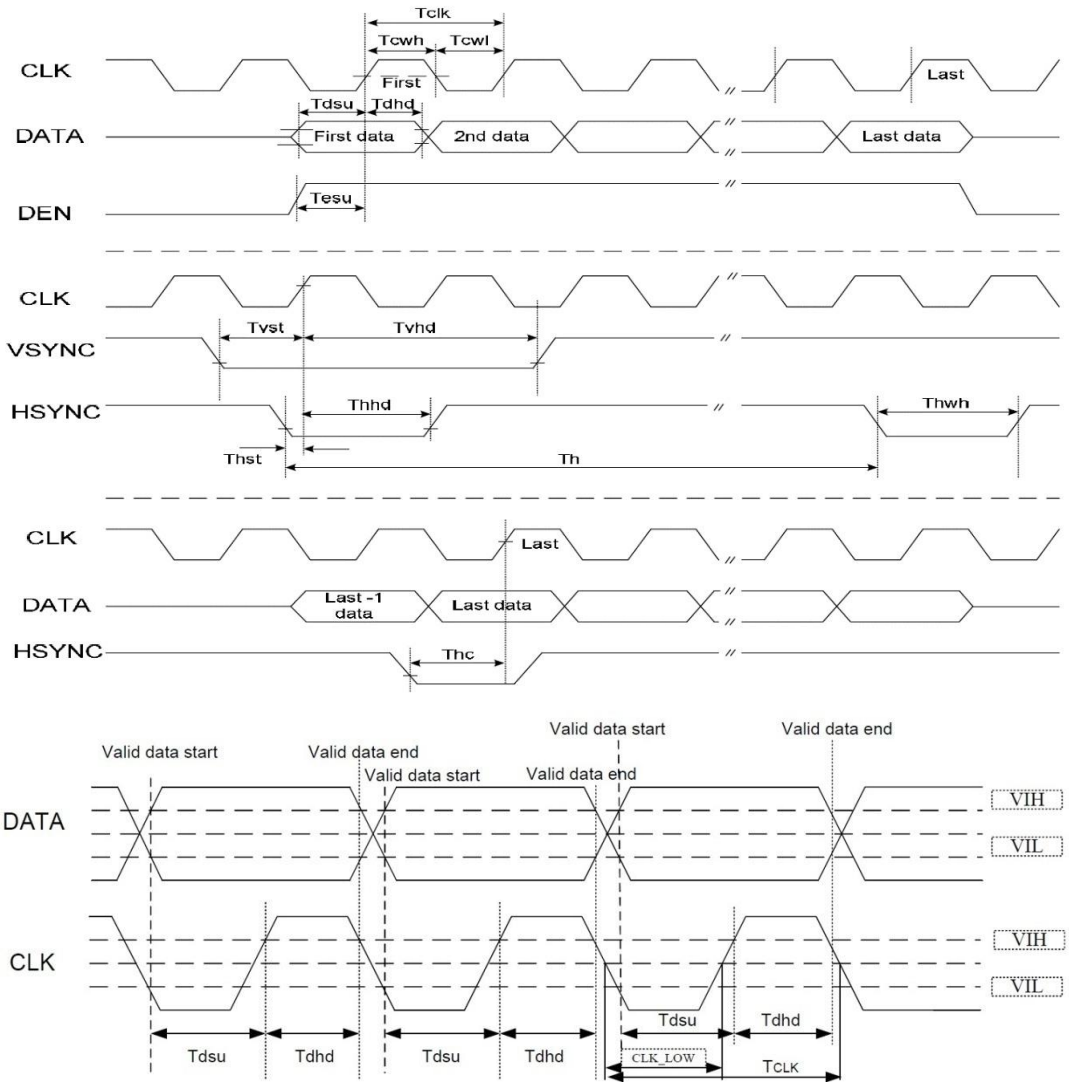

Timing parameter (VDD=3.3V, GND=0V, Ta=25℃)

12.2 Timing Characteristic

ITEM		SYMBOL	MIN	TYP	MAX	UNIT	
DCLK Frequency		Fclk	23	25	27	MHz	
Hsync	Period Time	Th	808	816	896	DCLK	
	Display Period	Thdisp		800	-	DCLK	
	Back Porch	Thbp	4	8	48	DCLK	By H BLANKING setting
	Front Porch	Thfp	4	8	48	DCLK	
	Pulse Width	Thw	2	4	8	DCLK	
Vsync	Period Time	Tv	488	496	504	H	
	Display Period	Tvdisp	-	480	-	H	
	Back Porch	Tvbp	4	8	12	H	By V BLANKING setting
	Front Porch	Tvfp	4	8	12	H	
	Pulse Width	Tvw	2	4	8	H	

12.3 SYNC Mode Timing Diagram

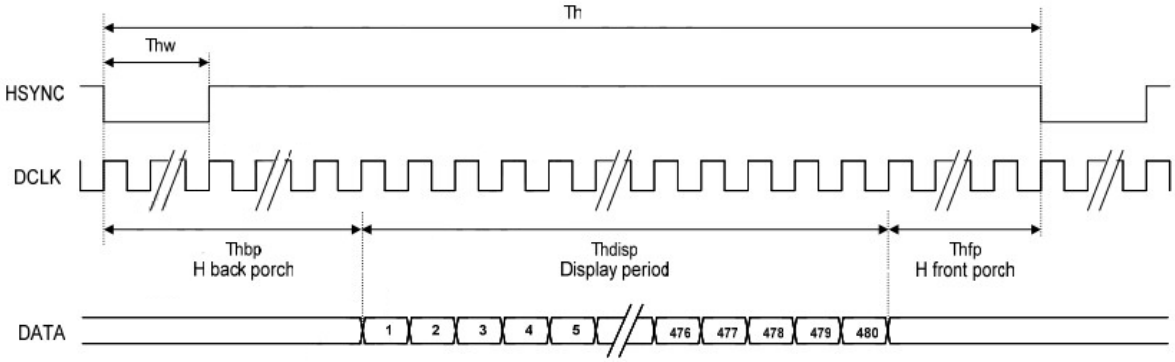

12.4 SYNC-DE Mode Timing Diagram

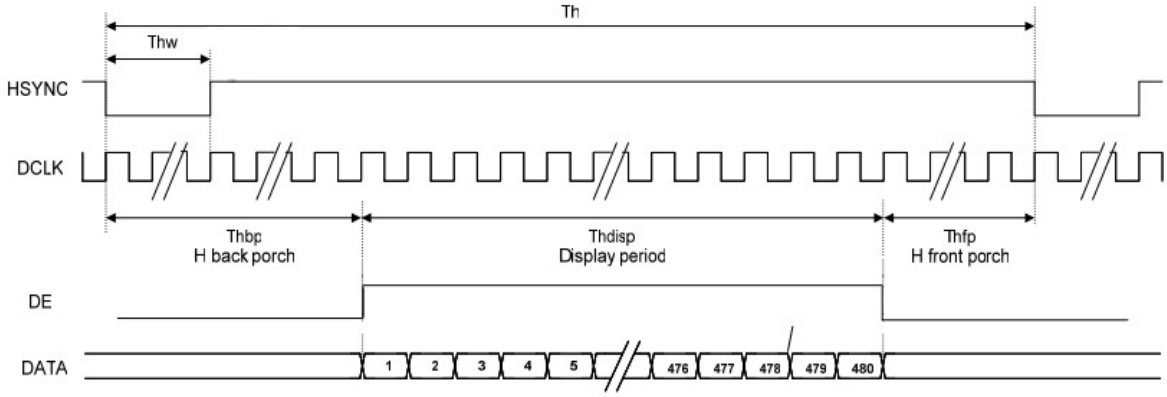

12.5 Reset Timing

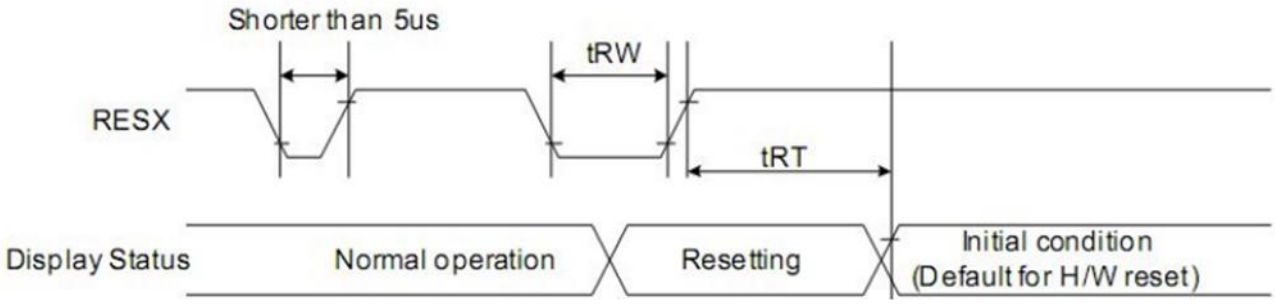

SIGNAL	SYMBOL	PARAMETER	MIN	MAX	UNIT
RESET	tRW	Reset low pulse width	40	-	us
	tRT	Reset complete time	-	5 (note1)	ms
			-	120 (note2)	ms

Note 1: When reset applied during SLPIN mode
Note 2: When reset applied during SLPOUT mode.

12.6 Power On Sequence

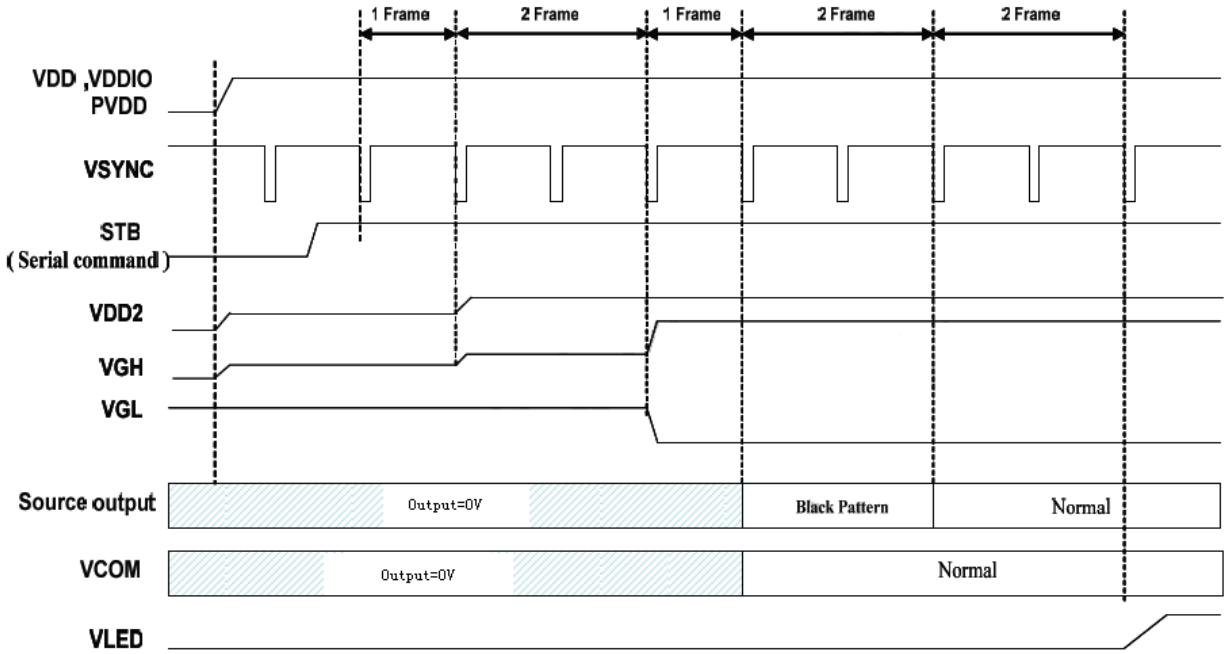

12.7 Power-off Sequence

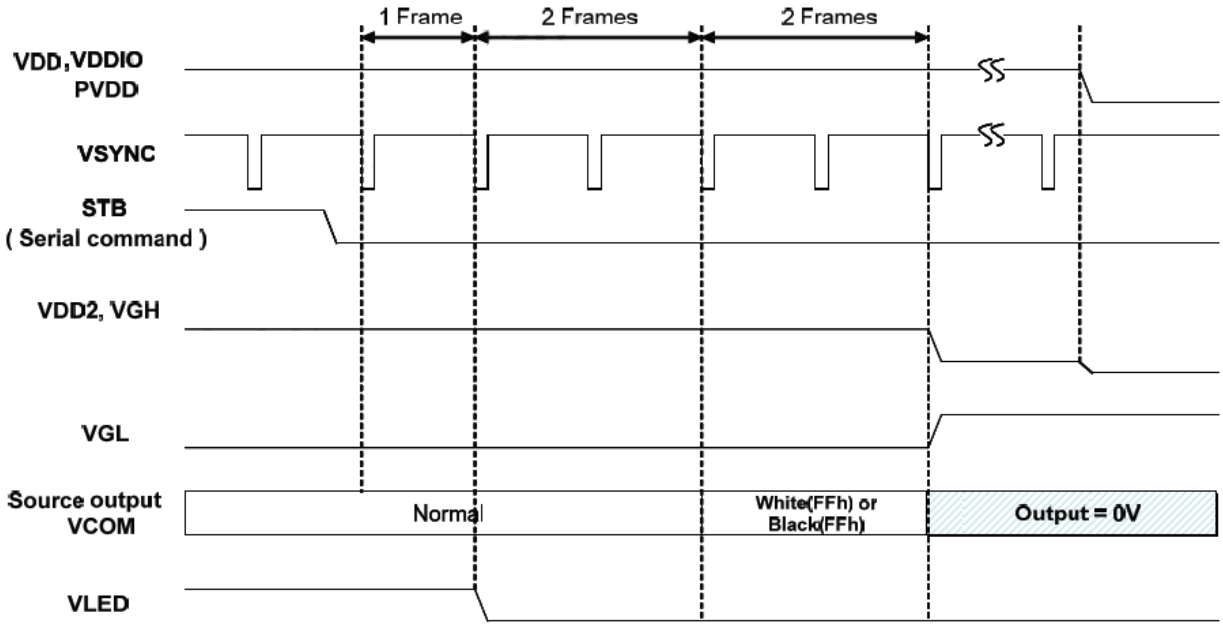

Note:
When normally-black LC is used, please send black pattern to discharge the panel.
When normally-white LC is used, please send white pattern to discharge the panel

13. Reliability Test

No.	SYMBOL	TEST CONDITION	REMARK
1	High Temperature Storage	80°C±2°C 96H Restore 2H at 25°C Power off	After test cosmetic and electrical defects should not happen.
2	Low Temperature Storage	-30°C±2°C 96H Restore 2H at 25°C Power off	
3	High Temperature Operation	70°C±2°C 96H Power on	
4	Low Temperature Operation	-20°C±2°C 96H Power on	
5	High Temperature & Humidity Operation	60°C±2°C 90%RH 96H Power on	
6	Temperature Cycle	-20°C←→25°C←→70°C 30min 5min 30min After 10 cycles, restore 2H at 25°C Power off	
7	Vibration Test	10Hz~150Hz, 100m/s^2, 120min	
8	Shock Test	Half-sinewave, 300m/s^2, 11ms	

Note: The Displays are of the highest rated 'Grade A', which allows for 0-4 defective pixels. A defective pixel could be solid Black (Dead), White, Red, Green or Blue.

14. Precautions for Using LCD Modules

14.1 Handing Precautions

- The display panel is made of glass and polarizer. The glass is fragile. It tends to be chipped during handling especially on the edges. Please avoid dropping or jarring. Please be careful not subject it to a mechanical shock by dropping it on impact.
- If the display panel is damaged and the liquid crystal substance leaks out, be sure not to get any of it in your mouth. If the substance contacts your skin or clothes, wash it off using soap and water.
- Do not apply excessive force to the display surface or to the adjoining areas since this may cause the color tone to vary. Do not touch the display with bare hands. This will stain the display area and degraded insulation between terminals (some cosmetics are determined by the polarizer).
- The polarizer covering the display surface of the LCD module is soft and easily scratched. Handle this polarizer carefully. Do not touch, push or rub the exposed polarizer with anything harder than an HB pencil lead (e.g., glass, tweezers, etc.). Do not put or attach anything on the display area to avoid leaving marks on it. Condensation on the surface and contact with terminals due to cold temperature will damage, stain or contaminate the polarizer. After products are tested at low temperature they must be warmed up in a container before coming into contact with room temperature air.
- If the display surface becomes contaminated, breathe on the surface and gently wipe it with a soft dry cloth. If it is heavily contaminated, moisten the cloth with one of the following solvents
    - Isopropyl alcohol
    - Ethyl alcohol

  Do not scrub hard as it might damage the display surface.

- Solvents other than those mentioned above may damage the polarizer. Especially the following.
    - Water
    - Ketone
    - Aromatic solvents

  Wipe off saliva or water drops immediately, contact with water over a long period of time may cause deformation or color fading. Avoid contact with oil and fat.
- Take necessary precautions to minimize corrosion of the electrode. Corrosion of the electrodes is accelerated by water droplets, moisture condensation or current flow in a high-humidity environment.
- Install the LCD Module by using the mounting holes. When mounting the LCD module, make sure it is free of twisting, warping and distortion. In particular, do not forcibly pull or bend the I/O cable or the backlight cable.
- Do not attempt to disassemble or process the LCD module.
- NC terminal should be open. Do not connect anything on it.
- If the logic circuit power is off, do not apply input signals.
- Control Electro-Static Discharge. Since this module uses a CMOS LSI, the same careful attention should be paid to electrostatic discharge as for an ordinary CMOS IC. To prevent destruction of the elements by static electricity, ensure that an optimum work environment is maintained.

  - Before removing the LCM from its packing case or incorporating it into a set, be sure that the module and your body has the same electric potential. Be sure to ground your body when handling the LCD modules.
  - To reduce the amount of static electricity generated, do not conduct assembly and other work under dry conditions. To reduce the generation of static electricity, please ensure that the air in the work environment is not too dry. A relative humidity of 50%-60% is recommended. As much as possible, make the electric potential of your work clothes and that of the work bench the ground potential.
  - The LCD module is coated with a film to protect the display surface. Be careful when peeling off this protective film since static electricity may be generated.
- Since the LCM has been assembled and adjusted with a high degree of precision, avoid applying excessive shocks to the module or making any alterations or modifications to it.
  - Do not alter, modify or change the shape of the tab on the metal frame.
  - Do not make extra holes on the printed circuit board, modify its shape or change the positions of components to be attached.
  - Do not damage or modify the pattern writing on the printed circuit board.
  - Absolutely do not modify the zebra rubber strip (conductive rubber) or heat seal connector.
  - Do not drop, bend or twist the LCM.

14.2 Storage Precautions

When storing the LCD modules, the following precautions are necessary.

- Store them in a sealed polyethylene bag. If properly sealed, there is no need for the desiccant.
- Store them in a dark place. Do not expose to sunlight or fluorescent light, keep the temperature between 0℃ and 35℃, and keep the relative humidity between 40%RH and 60%RH.
- The polarizer surface should not come in contact with any other objects. (We advise you to store them in an anti-static electricity container in which they were shipped. Some Liquid crystals solidify under low temperature (below the storage temperature range) leading to defective orientation or the generation of air bubbles (black or white). Air bubbles may also be generated if the module is subjected to low temperature.
- If the LCD modules have been operating for a long time showing the same display patterns, the display patterns may remain on the screen as ghost images and a slight contrast irregularity may also appear. A normal operating status can be regained by suspending use for some time. It should be noted that this phenomenon does not adversely affect performance reliability.
- To minimize the performance degradation of the LCD modules resulting from destruction caused by static electricity etc., please avoid holding the following sections when handling the modules'
  - Exposed area of the printed circuit board
  - Terminal electrode sections

15. Legal Information

Proprietary Information

The information contained in this document is the property of 4D LCD Pty. Ltd.; these may be the subject of patents pending or granted, and must not be copied or disclosed without prior written permission.
4D LCD endeavors to ensure that the information in this document is correct and fairly stated but does not accept liability for any error or omission. The development of 4D LCD products and services is continuous and published information may not be up to date. It is important to check the current position with 4D LCD.
4D LCD reserves the right to modify, update or makes changes to Specifications or written material without prior notice at any time.
All trademarks belong to their respective owners and are recognized and acknowledged.

Disclaimer of Warranties & Limitation of Liability

4D LCD Pty Ltd makes no warranty, either expressed or implied with respect to any product, and specifically disclaims all other warranties, including but without limitation to; warranties for merchantability, non-infringement and fitness for any particular purpose.
Information contained in this publication regarding device applications and the like is provided only for your convenience and may be superseded by updates. It is your responsibility to ensure that your application meets with your specifications.
Images and graphics used throughout this document are for illustrative purposes only. All images and graphics used are possible to be displayed on the 4D LCD range of products, however the quality may vary.
In no event shall 4D LCD be liable to the buyer or to any third party for any indirect, incidental, special, consequential, punitive or exemplary damages (including but without limitation to; lost profits, lost savings, or loss of business opportunity) arising out of or relating to any product or service provided or to be provided by 4D LCD, or the use or inability to use the same, even if 4D LCD has been advised of the possibility of such damages.
4D LCD products are not fault tolerant nor designed, manufactured or intended for use or resale as on line control equipment in hazardous environments requiring fail – safe performance, such as in the operation of nuclear facilities, aircraft navigation or communication systems, air traffic control, direct life support machines or weapons systems in which the failure of the product could lead directly to death, personal injury or severe physical or environmental damage (‘High Risk Activities’). 4D LCD and its suppliers specifically disclaim any expressed or implied warranty of fitness for High Risk Activities.
Use of 4D LCD products and devices in 'High Risk Activities' and in any other application is entirely at the buyer’s risk, and the buyer agrees to defend, indemnify and hold harmless 4D LCD from any and all damages, claims, suits, or expenses resulting from such use. No licenses are conveyed, implicitly or otherwise, under any 4D LCD intellectual property rights.