LD1117

Adjustable and fixed low drop positive voltage regulator

Datasheet - production data

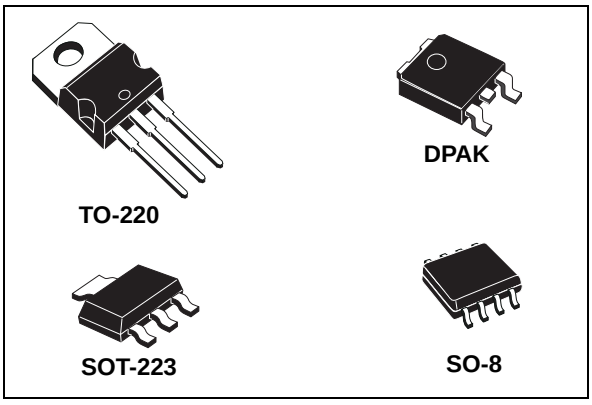

Features

- Low dropout voltage (1 V typ.)
- 2.85 V device performances are suitable for SCSI-2 active termination
- Output current up to 800 mA
- Fixed output voltage of: 1.2 V, 1.8 V, 2.5 V, 3.3 V, 5.0 V
- Adjustable version availability (V_{REF} = 1.25 V)
- Internal current and thermal limit
- Available in ± 1 % (at 25 °C) and 2 % in full temperature range
- Supply voltage rejection: 75 dB (typ.)

Description

The LD1117 is a low drop voltage regulator able to provide up to 800 mA of output current, available even in adjustable version (V_{REF} = 1.25 V). Concerning fixed versions, are offered the following output voltages: 1.2 V, 1.8 V, 2.5 V, 2.85 V, 3.3 V and 5.0 V. The device is supplied in: SOT-223, DPAK, SO-8 and TO-220. The SOT-223 and DPAK surface mount packages optimize the thermal characteristics even offering a relevant space saving effect. High efficiency is assured by NPN pass transistor. In fact in this case, unlike than PNP one, the quiescent current flows mostly into the load. Only a very common 10 µF minimum capacitor is needed for stability. On chip trimming allows the regulator to reach a very tight output voltage tolerance, within ± 1 % at 25 °C. The adjustable LD1117 is pin to pin compatible with the other standard. Adjustable voltage regulators maintaining the better performances in terms of drop and tolerance.

This is information on a product in full production. www.st.com

sales@prom-elec.com / ООО ПРОМЭЛЕКТРОНИКА

Contents

1 Diagram 5

2 Pin configuration 6

3 Maximum ratings 7

4 Schematic application 8

5 Electrical characteristics 9

6 Typical application 21

7 LD1117 adjustable: application note 24

8 Package mechanical data 25

9 Packing mechanical data 36

10 Order codes 42

11 Revision history 43

List of tables

Table 1. Absolute maximum ratings . . . 7
Table 2. Thermal data. . . . 7
Table 3. Electrical characteristics of LD1117#12 . . . 9
Table 4. Electrical characteristics of LD1117#18 . . . 10
Table 5. Electrical characteristics of LD1117#25 . . . 11
Table 6. Electrical characteristics of LD1117#33 . . . 12
Table 7. Electrical characteristics of LD1117#50 . . . 13
Table 8. Electrical characteristics of LD1117 (adjustable) . . . 14
Table 9. Electrical characteristics of LD1117#12C . . . 15
Table 10. Electrical characteristics of LD1117#18C . . . 16
Table 11. Electrical characteristics of LD1117#25C . . . 17
Table 12. Electrical characteristics of LD1117#33C . . . 18
Table 13. Electrical characteristics of LD1117#50C . . . 19
Table 14. Electrical characteristics of LD1117C (adjustable) . . . 20
Table 15. TO-220 mechanical data (type STD-ST Dual Gauge) . . . 25
Table 16. TO-220 mechanical data (type STD-ST Single Gauge) . . . 27
Table 17. SOT-223 mechanical data . . . 29
Table 18. SO-8 mechanical data . . . 30
Table 19. DPAK mechanical data. . . . 31
Table 20. Footprint data . . . 35
Table 21. SOT-223 tape and reel mechanical data . . . 37
Table 22. SO-8 tape and reel mechanical data . . . 39
Table 23. DPAK tape and reel mechanical data. . . . 40
Table 24. Order codes . . . 42
Table 25. Document revision history . . . 43

List of figures

Figure 1. Block diagram . . . 5
Figure 2. Pin connections (top view) . . . 6
Figure 3. Application circuit (for 1.2 V) . . . 8
Figure 4. Application circuit (for other fixed output voltages) . . . 8
Figure 5. Negative supply . . . 21
Figure 6. Circuit for increasing output voltage . . . 21
Figure 7. Voltage regulator with reference . . . 21
Figure 8. Battery backed-up regulated supply . . . 22
Figure 9. Post-regulated dual supply . . . 23
Figure 10. Adjustable output voltage application . . . 24
Figure 11. Adjustable output voltage application with improved ripple rejection . . . 24
Figure 12. Drawing dimension TO-220 (type STD-ST Dual Gauge) . . . 26
Figure 13. Drawing dimension TO-220 (type STD-ST Single Gauge) . . . 28
Figure 14. Drawing dimension SOT-223 . . . 29
Figure 15. Drawing dimension SO-8 . . . 30
Figure 16. Drawing dimension DPAK (type STD-ST) . . . 32
Figure 17. Drawing dimension DPAK (type Fujitsu-subcon.) . . . 33
Figure 18. Drawing dimension DPAK (type IDS-subcon.) . . . 34
Figure 19. DPAK footprint recommended data . . . 35
Figure 20. Drawing dimension tube for TO-220 Dual Gauge (mm.) . . . 36
Figure 21. Drawing dimension tube for TO-220 Single Gauge (mm.) . . . 36
Figure 22. Tape for SOT-223 (dimensions are in mm) . . . 37
Figure 23. Reel for STO-223 (dimensions are in mm) . . . 38
Figure 24. SO-8 tape and reel dimensions . . . 39
Figure 25. DPAK footprint . . . 40
Figure 26. Tape for DPAK . . . 41
Figure 27. Reel for DPAK . . . 41

1 Diagram

Figure 1. Block diagram

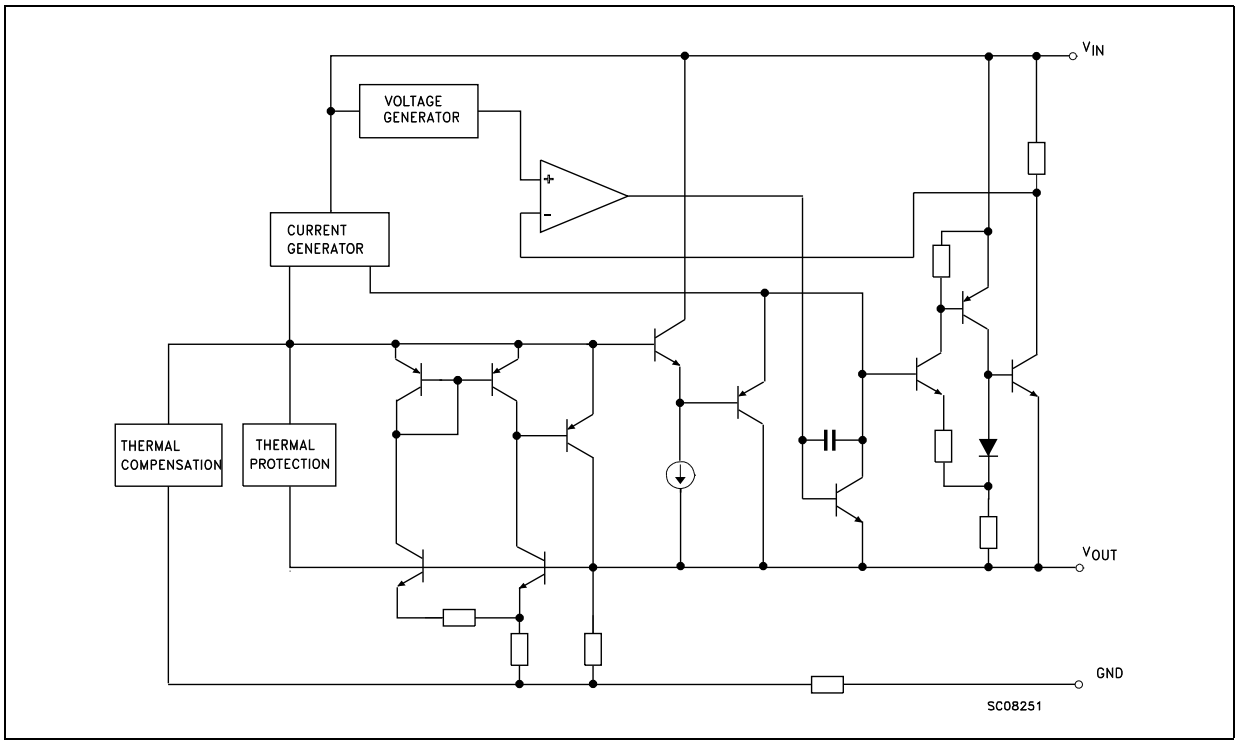

2 Pin configuration

Figure 2. Pin connections (top view)

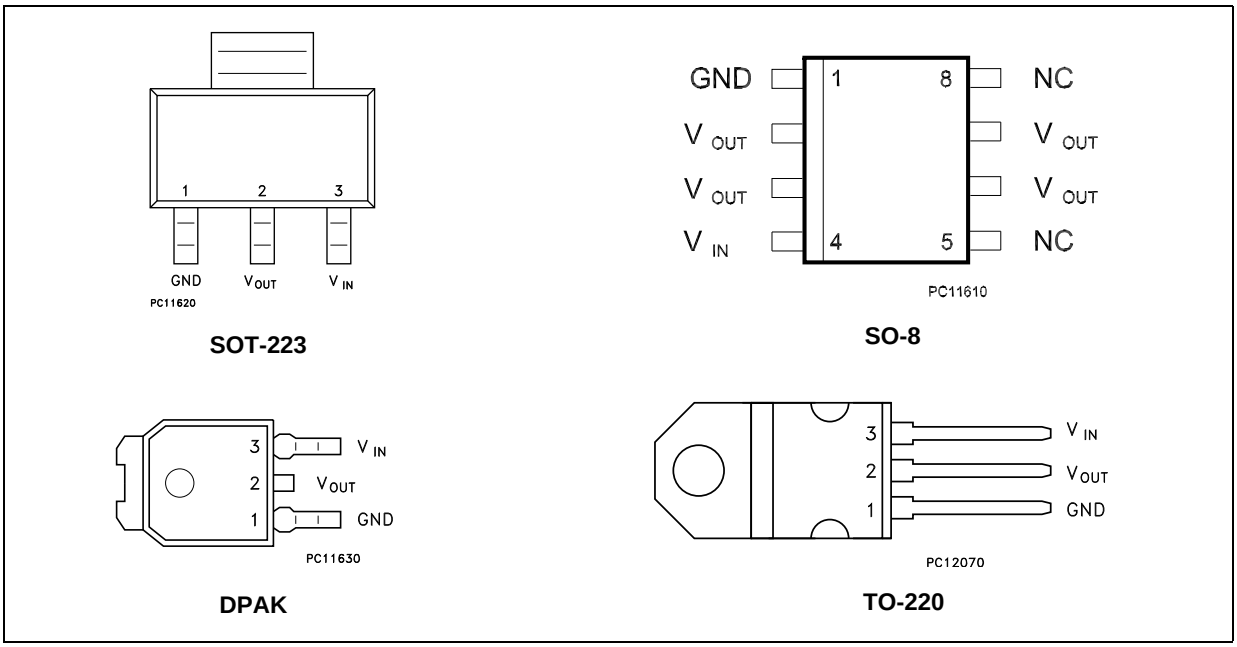

Note: The TAB is connected to the V_{OUT}.

3 Maximum ratings

Table 1. Absolute maximum ratings

Symbol	Parameter		Value	Unit
V_{IN} (1)	DC input voltage		15	V
P_{TOT}	Power dissipation		12	W
T_{STG}	Storage temperature range		-40 to +150	°C
T_{OP}	Operating junction temperature range	for C version	-40 to +125	°C
		for standard version	0 to +125	°C

1. Absolute maximum rating of V_{IN} = 18 V, when I_{OUT} is lower than 20 mA.

Table 2. Thermal data

Symbol	Parameter	SOT-223	SO-8	DPAK	TO-220	Unit
R_{thJC}	Thermal resistance junction-case	15	20	8	5	°C/W
R_{thJA}	Thermal resistance junction-ambient	110	55	100	50	°C/W

4 Schematic application

Figure 3. Application circuit (for 1.2 V)

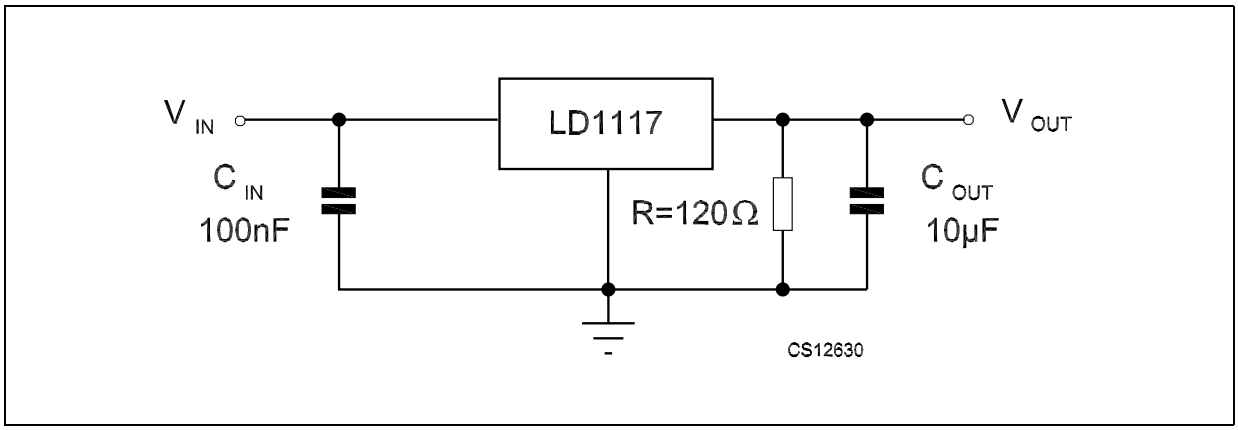

Figure 4. Application circuit (for other fixed output voltages)

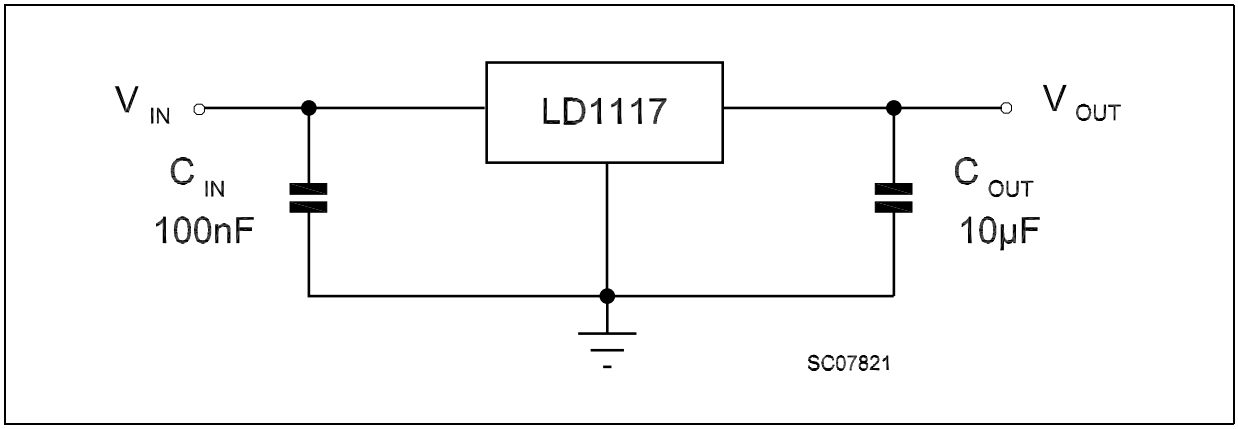

5 Electrical characteristics

Refer to the test circuits, T_J = 0 to 125 °C, C_O = 10 µF, R = 120 Ω between GND and OUT pins, unless otherwise specified.

Table 3. Electrical characteristics of LD1117#12

Symbol	Parameter	Test condition	Min.	Typ.	Max.	Unit
V_O	Output voltage	V_{in} = 3.2 V, I_O = 10 mA, T_J = 25 °C	1.188	1.20	1.212	V
V_O	Output voltage	I_O = 10 to 800 mA V_{in} - V_O = 1.4 to 10 V	1.140	1.20	1.260	V
ΔV_O	Line regulation	V_{in} - V_O = 1.5 to 13.75 V, I_O = 10 mA		0.035	0.2	%
ΔV_O	Load regulation	V_{in} - V_O = 3 V, I_O = 10 to 800 mA		0.1	0.4	%
ΔV_O	Temperature stability			0.5		%
ΔV_O	Long term stability	1000 hrs, T_J = 125 °C		0.3		%
V_{in}	Operating input voltage				15	V
I_{adj}	Adjustment pin current	$V_{in} \leq 15$ V		60	120	µA
ΔI_{adj}	Adjustment pin current change	V_{in} - V_O = 1.4 to 10 V I_O = 10 to 800 mA		1	5	µA
$I_{O(min)}$	Minimum load current	V_{in} = 15 V		2	5	mA
I_O	Output current	V_{in} - V_O = 5 V, T_J = 25 °C	800	950	1300	mA
eN	Output noise (%V_O)	B = 10 Hz to 10 kHz, T_J = 25 °C		0.003		%
SVR	Supply voltage rejection	I_O = 40 mA, f = 120 Hz, T_J = 25 °C V_{in} - V_O = 3 V, V_{ripple} = 1 V_{PP}	60	75		dB
V_d	Dropout voltage	I_O = 100 mA		1	1.1	V
		I_O = 500 mA		1.05	1.15	
		I_O = 800 mA		1.10	1.2	
	Thermal regulation	T_a = 25 °C, 30 ms Pulse		0.01	0.1	%/W

Refer to the test circuits, T_J = 0 to 125 °C, C_O = 10 µF, unless otherwise specified.

Table 4. Electrical characteristics of LD1117#18

Symbol	Parameter	Test condition	Min.	Typ.	Max.	Unit
V_O	Output voltage	V_{in} = 3.8 V, I_O = 10 mA, T_J = 25 °C	1.78	1.8	1.82	V
V_O	Output voltage	I_O = 0 to 800 mA, V_{in} = 3.3 to 8 V	1.76		1.84	V
ΔV_O	Line regulation	V_{in} = 3.3 to 8 V, I_O = 0 mA		1	6	mV
ΔV_O	Load regulation	V_{in} = 3.3 V, I_O = 0 to 800 mA		1	10	mV
ΔV_O	Temperature stability			0.5		%
ΔV_O	Long term stability	1000 hrs, T_J = 125 °C		0.3		%
V_{in}	Operating input voltage	I_O = 100 mA			15	V
I_d	Quiescent current	$V_{in} \leq 8$ V		5	10	mA
I_O	Output current	V_{in} = 6.8 V, T_J = 25 °C	800	950	1300	mA
eN	Output noise voltage	B = 10 Hz to 10 kHz, T_J = 25 °C		100		µV
SVR	Supply voltage rejection	I_O = 40 mA, f = 120 Hz, T_J = 25 °C V_{in} = 5.5 V, V_{ripple} = 1 V_{PP}	60	75		dB
V_d	Dropout voltage	I_O = 100 mA		1	1.1	V
		I_O = 500 mA		1.05	1.15	
		I_O = 800 mA		1.10	1.2	
	Thermal regulation	T_a = 25 °C, 30 ms Pulse		0.01	0.1	%/W

Refer to the test circuits, T_J = 0 to 125 °C, C_O = 10 µF, unless otherwise specified.

Table 5. Electrical characteristics of LD1117#25

Symbol	Parameter	Test condition	Min.	Typ.	Max.	Unit
V_O	Output voltage	V_{in} = 4.5 V, I_O = 10 mA, T_J = 25 °C	2.475	2.5	2.525	V
V_O	Output voltage	I_O = 0 to 800 mA, V_{in} = 3.9 to 10 V	2.45		2.55	V
ΔV_O	Line regulation	V_{in} = 3.9 to 10 V, I_O = 0 mA		1	6	mV
ΔV_O	Load regulation	V_{in} = 3.9 V, I_O = 0 to 800 mA		1	10	mV
ΔV_O	Temperature stability			0.5		%
ΔV_O	Long term stability	1000 hrs, T_J = 125 °C		0.3		%
V_{in}	Operating input voltage	I_O = 100 mA			15	V
I_d	Quiescent current	$V_{in} \leq 10$ V		5	10	mA
I_O	Output current	V_{in} = 7.5 V T_J = 25 °C	800	950	1300	mA
eN	Output noise voltage	B = 10 Hz to 10 kHz, T_J = 25 °C		100		µV
SVR	Supply voltage rejection	I_O = 40 mA, f = 120 Hz, T_J = 25 °C V_{in} = 5.5 V, V_{ripple} = 1 V_{PP}	60	75		dB
V_d	Dropout voltage	I_O = 100 mA		1	1.1	V
		I_O = 500 mA		1.05	1.15	
		I_O = 800 mA		1.10	1.2	
	Thermal regulation	T_a = 25 °C, 30 ms Pulse		0.01	0.1	%/W

Refer to the test circuits, T_J = 0 to 125 °C, C_O = 10 µF, unless otherwise specified.

Table 6. Electrical characteristics of LD1117#33

Symbol	Parameter	Test condition	Min.	Typ.	Max.	Unit
V_O	Output voltage	V_{in} = 5.3 V, I_O = 10 mA, T_J = 25 °C	3.267	3.3	3.333	V
V_O	Output voltage	I_O = 0 to 800 mA, V_{in} = 4.75 to 10 V	3.235		3.365	V
ΔV_O	Line regulation	V_{in} = 4.75 to 15 V, I_O = 0 mA		1	6	mV
ΔV_O	Load regulation	V_{in} = 4.75 V, I_O = 0 to 800 mA		1	10	mV
ΔV_O	Temperature stability			0.5		%
ΔV_O	Long term stability	1000 hrs, T_J = 125 °C		0.3		%
V_{in}	Operating input voltage	I_O = 100 mA			15	V
I_d	Quiescent current	$V_{in} \leq 15$ V		5	10	mA
I_O	Output current	V_{in} = 8.3 V, T_J = 25 °C	800	950	1300	mA
eN	Output noise voltage	B = 10 Hz to 10 kHz, T_J = 25 °C		100		µV
SVR	Supply voltage rejection	I_O = 40 mA, f = 120 Hz, T_J = 25 °C V_{in} = 6.3 V, V_{ripple} = 1 V_{PP}	60	75		dB
V_d	Dropout voltage	I_O = 100 mA		1	1.1	V
		I_O = 500 mA		1.05	1.15	
		I_O = 800 mA		1.10	1.2	
	Thermal regulation	T_a = 25 °C, 30 ms Pulse		0.01	0.1	%/W

Refer to the test circuits, T_J = 0 to 125 °C, C_O = 10 µF, unless otherwise specified.

Table 7. Electrical characteristics of LD1117#50

Symbol	Parameter	Test condition	Min.	Typ.	Max.	Unit
V_O	Output voltage	V_{in} = 7 V, I_O = 10 mA, T_J = 25 °C	4.95	5	5.05	V
V_O	Output voltage	I_O = 0 to 800 mA, V_{in} = 6.5 to 15 V	4.9		5.1	V
ΔV_O	Line regulation	V_{in} = 6.5 to 15 V, I_O = 0 mA		1	10	mV
ΔV_O	Load regulation	V_{in} = 6.5 V, I_O = 0 to 800 mA		1	15	mV
ΔV_O	Temperature stability			0.5		%
ΔV_O	Long term stability	1000 hrs, T_J = 125 °C		0.3		%
V_{in}	Operating input voltage	I_O = 100 mA			15	V
I_d	Quiescent current	$V_{in} \leq 15$ V		5	10	mA
I_O	Output current	V_{in} = 10 V, T_J = 25 °C	800	950	1300	mA
eN	Output noise voltage	B = 10 Hz to 10 kHz, T_J = 25 °C		100		µV
SVR	Supply voltage rejection	I_O = 40 mA, f = 120 Hz, T_J = 25 °C V_{in} = 8 V, V_{ripple} = 1 V_{PP}	60	75		dB
V_d	Dropout voltage	I_O = 100 mA		1	1.1	V
		I_O = 500 mA		1.05	1.15	
		I_O = 800 mA		1.10	1.2	
	Thermal regulation	T_a = 25 °C, 30 ms Pulse		0.01	0.1	%/W

Refer to the test circuits, T_J = 0 to 125 °C, C_O = 10 µF, unless otherwise specified.

Table 8. Electrical characteristics of LD1117 (adjustable)

Symbol	Parameter	Test condition	Min.	Typ.	Max.	Unit
V_{ref}	Reference voltage	V_{in} - V_O = 2 V, I_O = 10 mA, T_J = 25 °C	1.238	1.25	1.262	V
V_{ref}	Reference voltage	I_O = 10 to 800 mA, V_{in} - V_O = 1.4 to 10 V	1.225		1.275	V
ΔV_O	Line regulation	V_{in} - V_O = 1.5 to 13.75 V, I_O = 10 mA		0.035	0.2	%
ΔV_O	Load regulation	V_{in} - V_O = 3 V, I_O = 10 to 800 mA		0.1	0.4	%
ΔV_O	Temperature stability			0.5		%
ΔV_O	Long term stability	1000 hrs, T_J = 125 °C		0.3		%
V_{in}	Operating input voltage				15	V
I_{adj}	Adjustment pin current	$V_{in} \leq$ 15 V		60	120	µA
ΔI_{adj}	Adjustment pin current change	V_{in} - V_O = 1.4 to 10 V, I_O = 10 to 800 mA		1	5	µA
$I_{O(min)}$	Minimum load current	V_{in} = 15 V		2	5	mA
I_O	Output current	V_{in} - V_O = 5 V, T_J = 25 °C	800	950	1300	mA
eN	Output noise (%V_O)	B = 10 Hz to 10 kHz, T_J = 25 °C		0.003		%
SVR	Supply voltage rejection	I_O = 40 mA, f = 120 Hz, T_J = 25 °C V_{in} - V_O = 3 V, V_{ripple} = 1 V_{PP}	60	75		dB
V_d	Dropout voltage	I_O = 100 mA		1	1.1	V
		I_O = 500 mA		1.05	1.15	
		I_O = 800 mA		1.10	1.2	
	Thermal regulation	T_a = 25 °C, 30 ms Pulse		0.01	0.1	%/W

Refer to the test circuits, T_J = -40 to 125 °C, C_O = 10 µF, R = 120 Ω between GND and OUT pins, unless otherwise specified.

Table 9. Electrical characteristics of LD1117#12C

Symbol	Parameter	Test condition	Min.	Typ.	Max.	Unit
V_O	Output voltage	V_{in} - V_O = 2 V, I_O = 10 mA, T_J = 25 °C	1.176	1.20	1.224	V
V_O	Output voltage	I_O = 10 to 800 mA, V_{in} - V_O = 1.4 to 10 V	1.120	1.20	1.280	V
ΔV_O	Line regulation	V_{in} - V_O = 1.5 to 13.75 V, I_O = 10 mA			1	%
ΔV_O	Load regulation	V_{in} - V_O = 3 V, I_O = 10 to 800 mA			1	%
ΔV_O	Temperature stability			0.5		%
ΔV_O	Long term stability	1000 hrs, T_J = 125 °C		0.3		%
V_{in}	Operating input voltage				15	V
I_{adj}	Adjustment pin current	$V_{in} \leq$ 15 V		60	120	µA
ΔI_{adj}	Adjustment pin current change	V_{in} - V_O = 1.4 to 10 V I_O = 10 to 800 mA		1	5	µA
$I_{O(min)}$	Minimum load current	V_{in} = 15 V		2	5	mA
I_O	Output current	V_{in} - V_O = 5 V, T_J = 25 °C	800	950	1300	mA
eN	Output noise (%V_O)	B = 10 Hz to 10 kHz, T_J = 25 °C		0.003		%
SVR	Supply voltage rejection	I_O = 40 mA, f = 120 Hz, T_J = 25 °C V_{in} - V_O = 3 V, V_{ripple} = 1 V_{PP}	60	75		dB
V_d	Dropout voltage	I_O = 100 mA, T_J = 0 to 125 °C		1	1.1	V
		I_O = 500 mA, T_J = 0 to 125 °C		1.05	1.2	
		I_O = 800 mA, T_J = 0 to 125 °C		1.10	1.3	
	Thermal regulation	T_a = 25 °C, 30 ms Pulse		0.01	0.1	%/W

Refer to the test circuits, T_J = -40 to 125 °C, C_O = 10 µF, unless otherwise specified.

Table 10. Electrical characteristics of LD1117#18C

Symbol	Parameter	Test condition	Min.	Typ.	Max.	Unit
V_O	Output voltage	V_{in} = 3.8 V, I_O = 10 mA, T_J = 25 °C	1.76	1.8	1.84	V
V_O	Output voltage	I_O = 0 to 800 mA, V_{in} = 3.9 to 10 V	1.73		1.87	V
ΔV_O	Line regulation	V_{in} = 3.3 to 8 V, I_O = 0 mA		1	30	mV
ΔV_O	Load regulation	V_{in} = 3.3 V, I_O = 0 to 800 mA		1	30	mV
ΔV_O	Temperature stability			0.5		%
ΔV_O	Long term stability	1000 hrs, T_J = 125 °C		0.3		%
V_{in}	Operating input voltage	I_O = 100 mA			15	V
I_d	Quiescent current	$V_{in} \leq 8$ V		5	10	mA
I_O	Output current	V_{in} = 6.8 V T_J = 25 °C	800	950	1300	mA
eN	Output noise voltage	B = 10 Hz to 10 kHz, T_J = 25 °C		100		µV
SVR	Supply voltage rejection	I_O = 40 mA, f = 120 Hz, T_J = 25 °C V_{in} = 5.5 V, V_{ripple} = 1 V_{PP}	60	75		dB
V_d	Dropout voltage	I_O = 100 mA, T_J = 0 to 125 °C		1	1.1	V
		I_O = 500 mA, T_J = 0 to 125 °C		1.05	1.15	
		I_O = 800 mA, T_J = 0 to 125 °C		1.10	1.2	
V_d	Dropout voltage	I_O = 100 mA			1.1	V
		I_O = 500 mA			1.2	
		I_O = 800 mA			1.3	
	Thermal regulation	T_a = 25 °C, 30 ms Pulse		0.01	0.1	%/W

Refer to the test circuits, T_J = -40 to 125 °C, C_O = 10 µF, unless otherwise specified.

Table 11. Electrical characteristics of LD1117#25C

Symbol	Parameter	Test condition	Min.	Typ.	Max.	Unit
V_O	Output voltage	V_{in} = 4.5 V, I_O = 10 mA, T_J = 25 °C	2.45	2.5	2.55	V
V_O	Output voltage	I_O = 0 to 800 mA, V_{in} = 3.9 to 10 V	2.4		2.6	V
ΔV_O	Line regulation	V_{in} = 3.9 to 10 V, I_O = 0 mA		1	30	mV
ΔV_O	Load regulation	V_{in} = 3.9 V, I_O = 0 to 800 mA		1	30	mV
ΔV_O	Temperature stability			0.5		%
ΔV_O	Long term stability	1000 hrs, T_J = 125 °C		0.3		%
V_{in}	Operating input voltage	I_O = 100 mA			15	V
I_d	Quiescent current	$V_{in} \leq 10$ V		5	10	mA
I_O	Output current	V_{in} = 7.5 V T_J = 25 °C	800	950	1300	mA
eN	Output noise voltage	B = 10 Hz to 10 kHz, T_J = 25 °C		100		µV
SVR	Supply voltage rejection	I_O = 40 mA, f = 120 Hz, T_J = 25 °C V_{in} = 5.5 V, V_{ripple} = 1 V_{PP}	60	75		dB
V_d	Dropout voltage	I_O = 100 mA, T_J = 0 to 125 °C		1	1.1	V
		I_O = 500 mA, T_J = 0 to 125 °C		1.05	1.15	
		I_O = 800 mA, T_J = 0 to 125 °C		1.10	1.2	
V_d	Dropout voltage	I_O = 100 mA			1.1	V
		I_O = 500 mA			1.2	
		I_O = 800 mA			1.3	
	Thermal regulation	T_a = 25 °C, 30 ms Pulse		0.01	0.1	%/W

Refer to the test circuits, T_J = -40 to 125 °C, C_O = 10 µF, unless otherwise specified.

Table 12. Electrical characteristics of LD1117#33C

Symbol	Parameter	Test condition	Min.	Typ.	Max.	Unit
V_O	Output voltage	V_{in} = 5.3 V, I_O = 10 mA, T_J = 25 °C	3.24	3.3	3.36	V
V_O	Output voltage	I_O = 0 to 800 mA, V_{in} = 4.75 to 10 V	3.16		3.44	V
ΔV_O	Line regulation	V_{in} = 4.75 to 15 V, I_O = 0 mA		1	30	mV
ΔV_O	Load regulation	V_{in} = 4.75 V, I_O = 0 to 800 mA		1	30	mV
ΔV_O	Temperature stability			0.5		%
ΔV_O	Long term stability	1000 hrs, T_J = 125 °C		0.3		%
V_{in}	Operating input voltage	I_O = 100 mA			15	V
I_d	Quiescent current	$V_{in} \leq 15$ V		5	10	mA
I_O	Output current	V_{in} = 8.3 V, T_J = 25 °C	800	950	1300	mA
eN	Output noise voltage	B = 10 Hz to 10 kHz, T_J = 25 °C		100		µV
SVR	Supply voltage rejection	I_O = 40 mA, f = 120 Hz, T_J = 25 °C V_{in} = 6.3 V, V_{ripple} = 1 V_{PP}	60	75		dB
V_d	Dropout voltage	I_O = 100 mA, T_J = 0 to 125 °C		1	1.1	V
		I_O = 500 mA, T_J = 0 to 125 °C		1.05	1.15	
		I_O = 800 mA, T_J = 0 to 125 °C		1.10	1.2	
V_d	Dropout voltage	I_O = 100 mA			1.1	V
		I_O = 500 mA			1.2	
		I_O = 800 mA			1.3	
	Thermal regulation	T_a = 25 °C, 30 ms Pulse		0.01	0.1	%/W

Refer to the test circuits, T_J = -40 to 125 °C, C_O = 10 µF, unless otherwise specified.

Table 13. Electrical characteristics of LD1117#50C

Symbol	Parameter	Test condition	Min.	Typ.	Max.	Unit
V_O	Output voltage	V_{in} = 7 V, I_O = 10 mA, T_J = 25 °C	4.9	5	5.1	V
V_O	Output voltage	I_O = 0 to 800 mA, V_{in} = 6.5 to 15 V	4.8		5.2	V
ΔV_O	Line regulation	V_{in} = 6.5 to 15 V, I_O = 0 mA		1	50	mV
ΔV_O	Load regulation	V_{in} = 6.5 V, I_O = 0 to 800 mA		1	50	mV
ΔV_O	Temperature stability			0.5		%
ΔV_O	Long term stability	1000 hrs, T_J = 125 °C		0.3		%
V_{in}	Operating input voltage	I_O = 100 mA			15	V
I_d	Quiescent current	$V_{in} \leq 15$ V		5	10	mA
I_O	Output current	V_{in} = 10 V, T_J = 25 °C	800	950	1300	mA
eN	Output noise voltage	B = 10 Hz to 10 kHz, T_J = 25 °C		100		µV
SVR	Supply voltage rejection	I_O = 40 mA, f = 120 Hz, T_J = 25 °C V_{in} = 8 V, V_{ripple} = 1 V_{PP}	60	75		dB
V_d	Dropout voltage	I_O = 100 mA, T_J = 0 to 125 °C		1	1.1	V
		I_O = 500 mA, T_J = 0 to 125 °C		1.05	1.15	
		I_O = 800 mA, T_J = 0 to 125 °C		1.10	1.2	
V_d	Dropout voltage	I_O = 100 mA			1.1	V
		I_O = 500 mA			1.2	
		I_O = 800 mA			1.3	
	Thermal regulation	T_a = 25 °C, 30 ms Pulse		0.01	0.1	%/W

Refer to the test circuits, T_J = -40 to 125 °C, C_O = 10 µF, unless otherwise specified.

Table 14. Electrical characteristics of LD1117C (adjustable)

Symbol	Parameter	Test condition	Min.	Typ.	Max.	Unit
V_{ref}	Reference voltage	V_{in} - V_O = 2 V, I_O = 10 mA, T_J = 25 °C	1.225	1.25	1.275	V
V_{ref}	Reference voltage	I_O = 10 to 800 mA, V_{in} - V_O= 1.4 to 10 V	1.2		1.3	V
ΔV_O	Line regulation	V_{in} - V_O = 1.5 to 13.75 V, I_O = 10 mA			1	%
ΔV_O	Load regulation	V_{in} - V_O = 3 V, I_O = 10 to 800 mA			1	%
ΔV_O	Temperature stability			0.5		%
ΔV_O	Long term stability	1000 hrs, T_J = 125 °C		0.3		%
V_{in}	Operating input voltage				15	V
I_{adj}	Adjustment pin current	$V_{in} \leq 15$ V		60	120	µA
ΔI_{adj}	Adjustment pin current change	V_{in} - V_O = 1.4 to 10 V, I_O = 10 to 800 mA		1	10	µA
$I_{O(min)}$	Minimum load current	V_{in} = 15 V		2	5	mA
I_O	Output current	V_{in} - V_O = 5 V, T_J = 25 °C	800	950	1300	mA
eN	Output noise (%V_O)	B = 10 Hz to 10 kHz, T_J = 25 °C		0.003		%
SVR	Supply voltage rejection	I_O = 40 mA, f = 120 Hz, T_J = 25 °C V_{in} - V_O = 3 V, V_{ripple} = 1 V_{PP}	60	75		dB
V_d	Dropout voltage	I_O = 100 mA, T_J = 0 to 125 °C		1	1.1	V
		I_O = 500 mA, T_J = 0 to 125 °C		1.05	1.15	
		I_O = 800 mA, T_J = 0 to 125 °C		1.10	1.2	
V_d	Dropout voltage	I_O = 100 mA			1.1	V
		I_O = 500 mA			1.2	
		I_O = 800 mA			1.3	
	Thermal regulation	T_a = 25 °C, 30 ms Pulse		0.01	0.1	%/W

6 Typical application

Figure 5. Negative supply

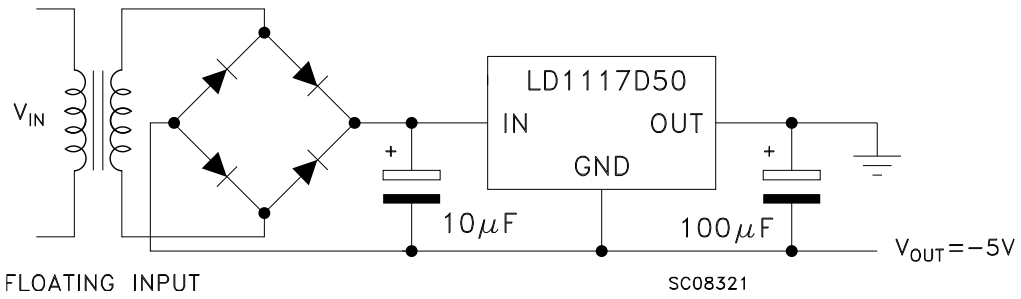

Figure 6. Circuit for increasing output voltage

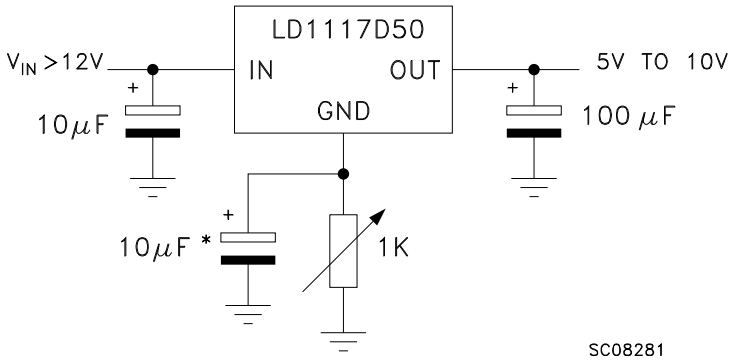

Figure 7. Voltage regulator with reference

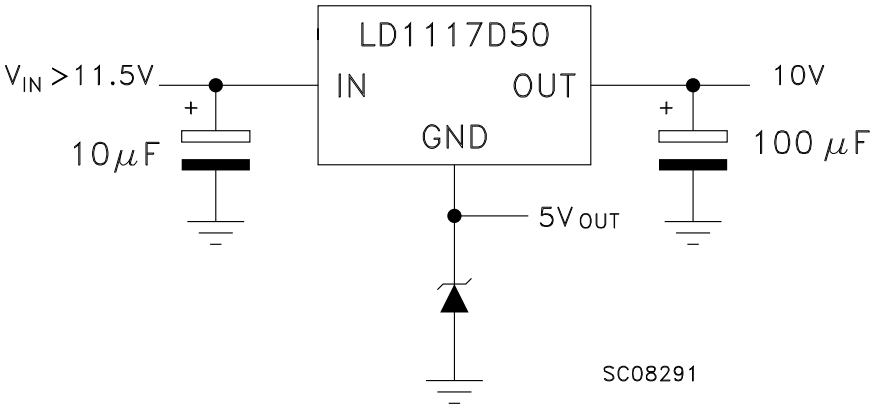

Figure 8. Battery backed-up regulated supply

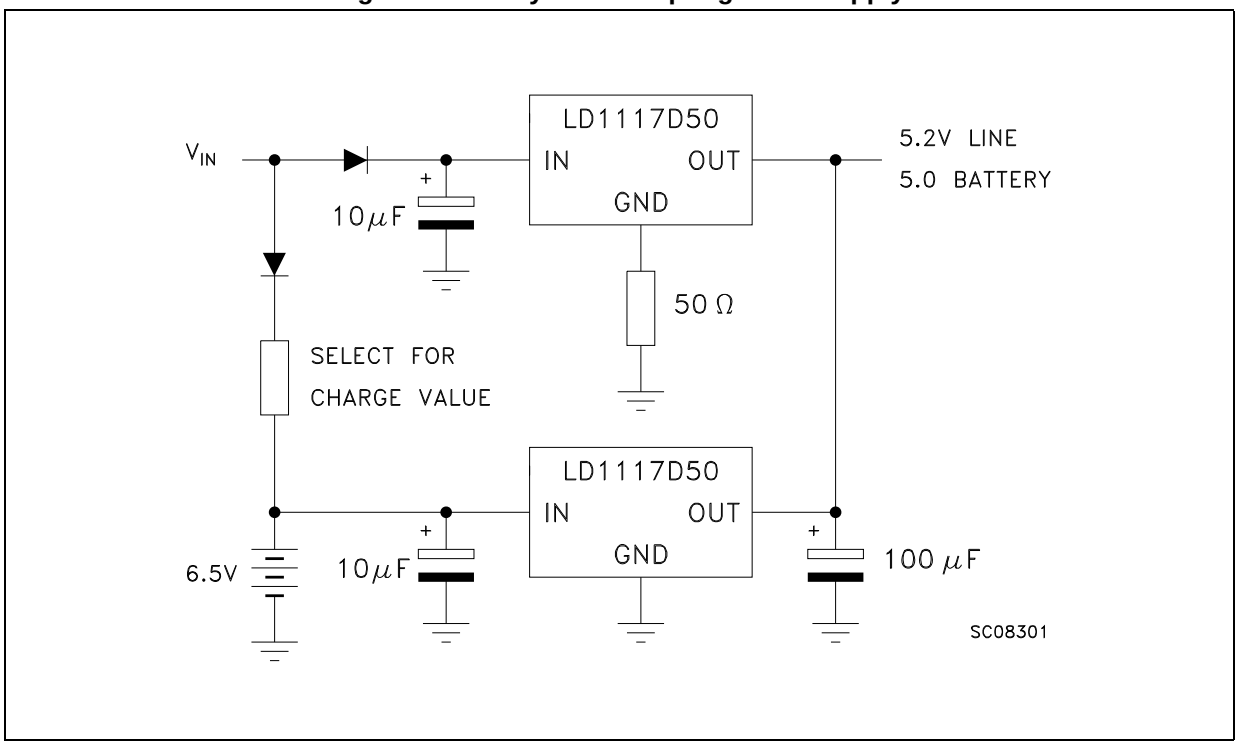

Figure 9. Post-regulated dual supply

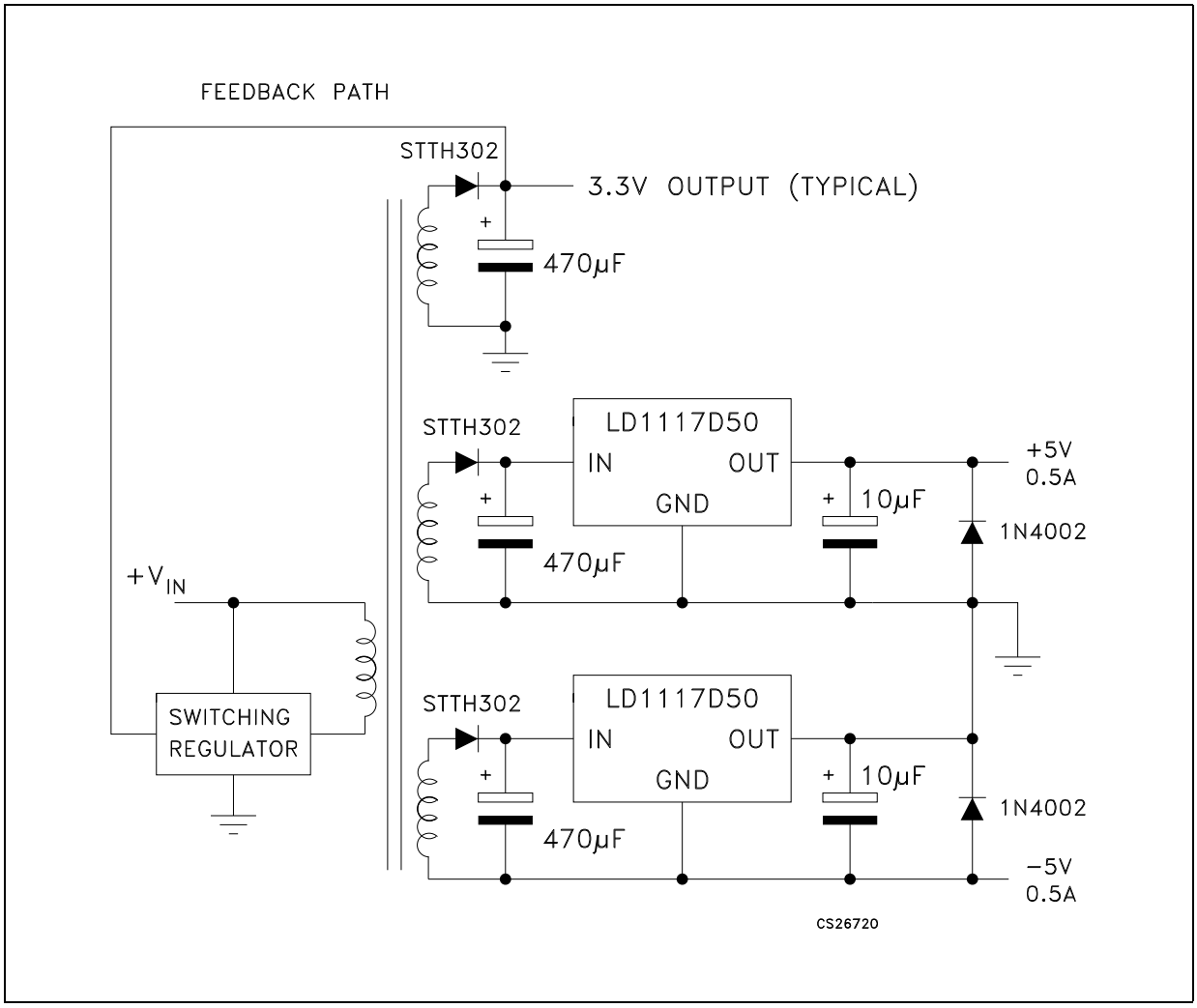

7 LD1117 adjustable: application note

The LD1117 adjustable has a thermal stabilized 1.25 ± 0.012 V reference voltage between the OUT and ADJ pins. I_{ADJ} is 60 µA typ. (120 µA max.) and ΔI_{ADJ} is 1 µA typ. (5 µA max.).

R_1 is normally fixed to 120 Ω. From *Figure 9* we obtain:

$V_{OUT} = V_{REF} + R_2 (I_{ADJ} + I_{R1}) = V_{REF} + R_2 (I_{ADJ} + V_{REF} / R_1) = V_{REF} (1 + R_2 / R_1) + R_2 \times I_{ADJ}$.

In normal application R_2 value is in the range of few kΩ, so the $R_2 \times I_{ADJ}$ product could not be considered in the V_{OUT} calculation; then the above expression becomes:

$V_{OUT} = V_{REF} (1 + R_2 / R_1)$.

In order to have the better load regulation it is important to realize a good Kelvin connection of R_1 and R_2 resistors. In particular R_1 connection must be realized very close to OUT and ADJ pin, while R_2 ground connection must be placed as near as possible to the negative Load pin. Ripple rejection can be improved by introducing a 10 µF electrolytic capacitor placed in parallel to the R_2 resistor (see *Figure 10*).

Figure 10. Adjustable output voltage application

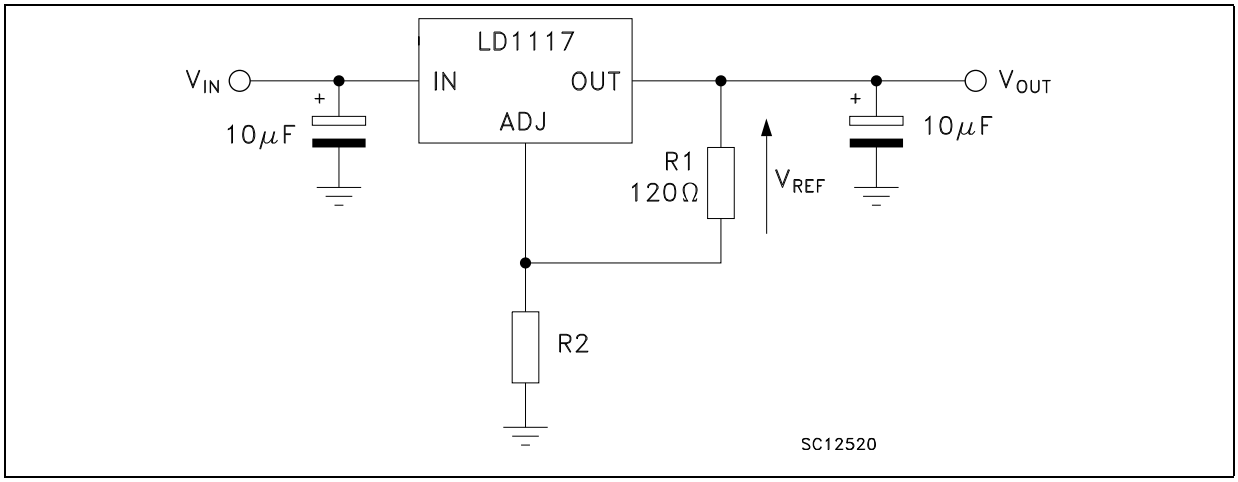

Figure 11. Adjustable output voltage application with improved ripple rejection

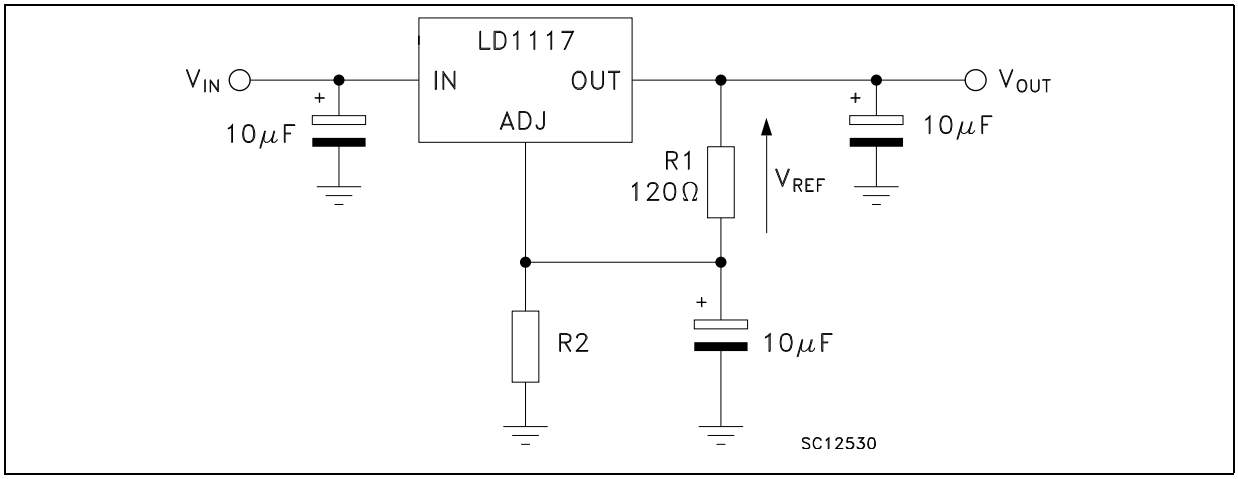

8 Package mechanical data

In order to meet environmental requirements, ST offers these devices in different grades of ECOPACK® packages, depending on their level of environmental compliance. ECOPACK® specifications, grade definitions and product status are available at: *www.st.com*. ECOPACK® is an ST trademark.

Table 15. TO-220 mechanical data (type STD-ST Dual Gauge)

Dim.	mm		
	Min.	Typ.	Max.
A	4.40		4.60
b	0.61		0.88
b1	1.14		1.70
c	0.48		0.70
D	15.25		15.75
D1		1.27	
E	10		10.40
e	2.40		2.70
e1	4.95		5.15
F	1.23		1.32
H1	6.20		6.60
J1	2.40		2.72
L	13		14
L1	3.50		3.93
L20		16.40	
L30		28.90	
∅P	3.75		3.85
Q	2.65		2.95

Figure 12. Drawing dimension TO-220 (type STD-ST Dual Gauge)

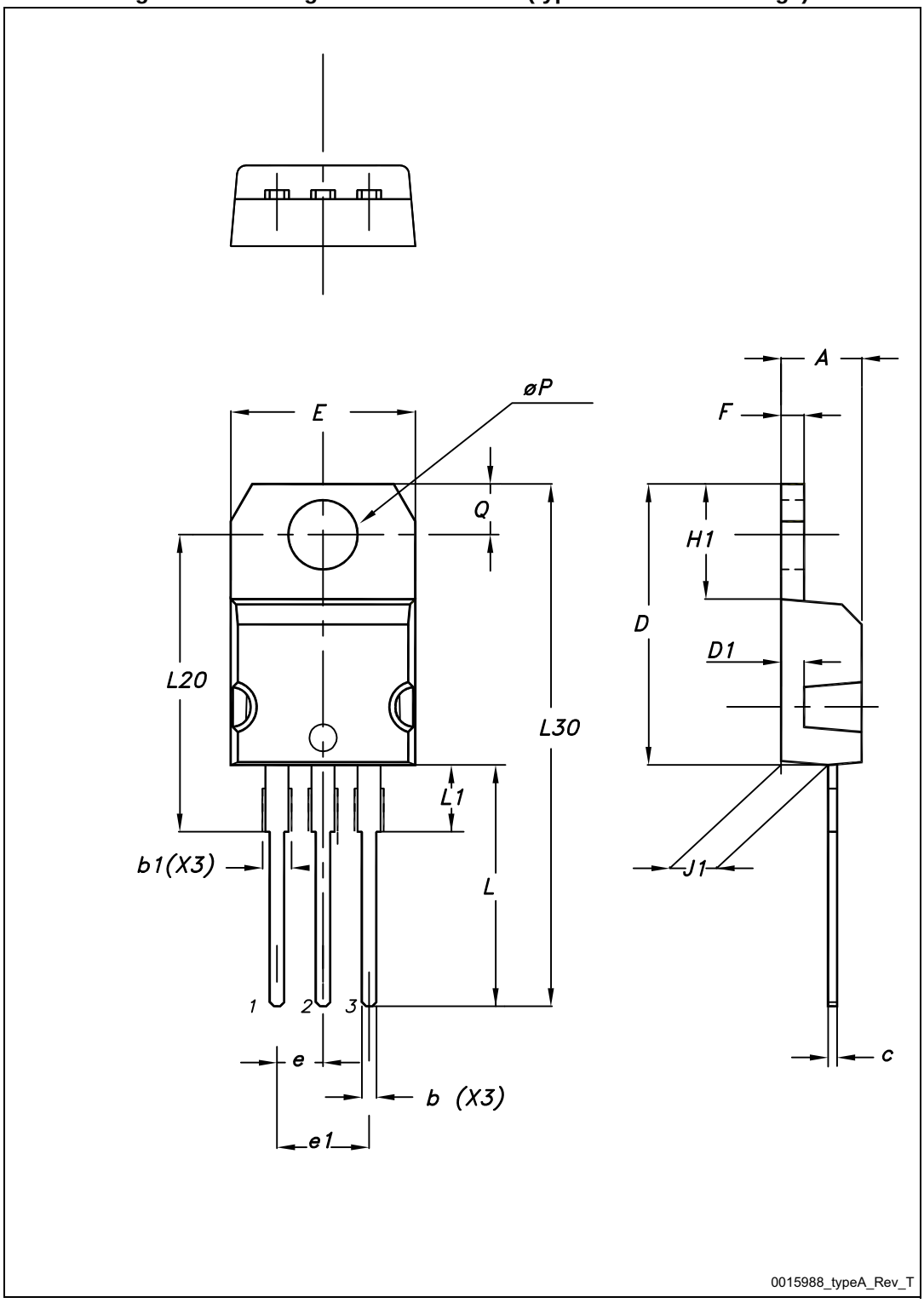

Table 16. TO-220 mechanical data (type STD-ST Single Gauge)

Dim.	mm		
	Min.	Typ.	Max.
A	4.40		4.60
b	0.61		0.88
b1	1.14		1.70
c	0.48		0.70
D	15.25		15.75
E	10		10.40
e	2.40		2.70
e1	4.95		5.15
F	0.51		0.60
H1	6.20		6.60
J1	2.40		2.72
L	13		14
L1	3.50		3.93
L20		16.40	
L30		28.90	
∅P	3.75		3.85
Q	2.65		2.95

Figure 13. Drawing dimension TO-220 (type STD-ST Single Gauge)

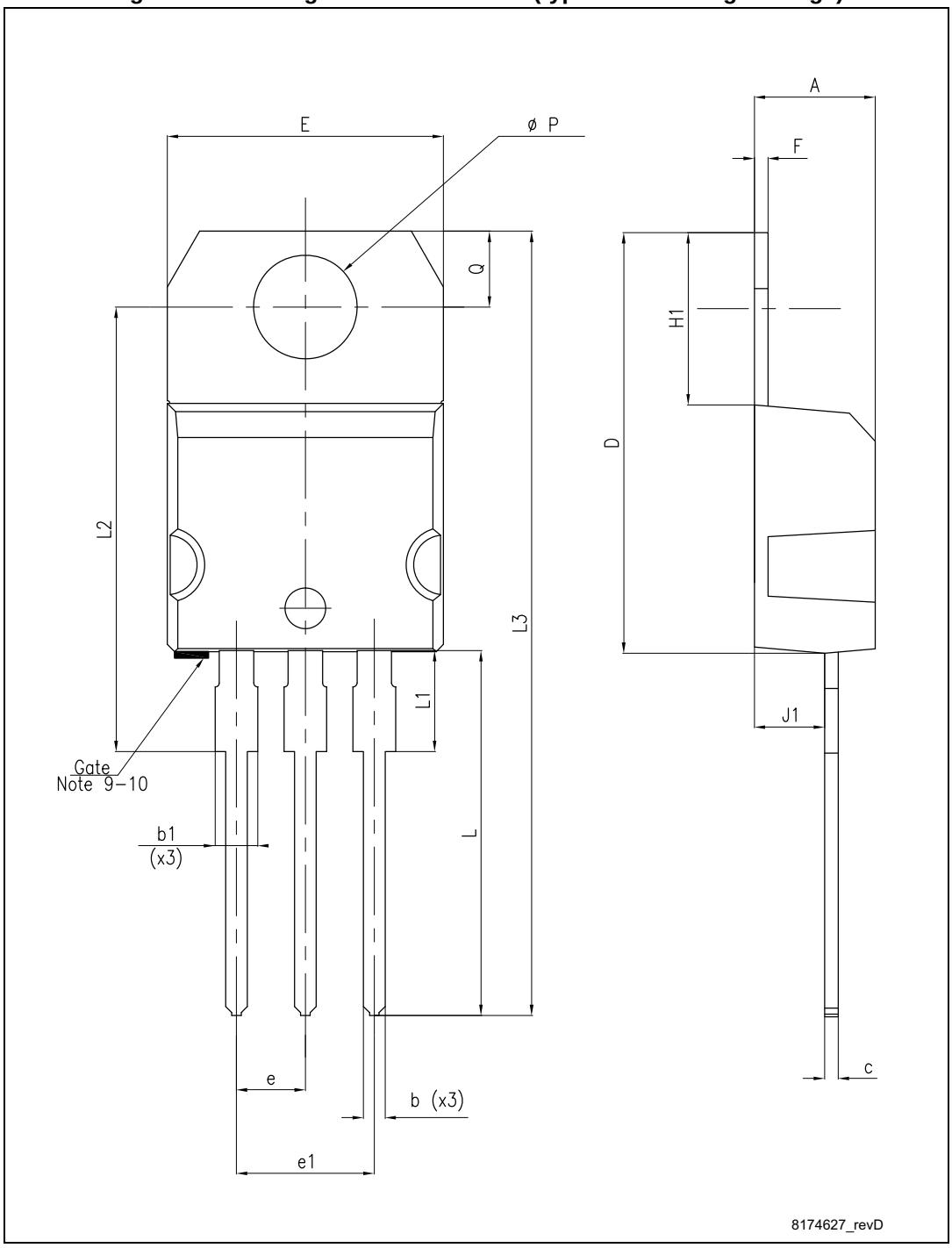

Table 17. SOT-223 mechanical data

Dim.	mm		
	Min.	Typ.	Max.
A			1.80
A1	0.02		0.1
B	0.60	0.70	0.85
B1	2.90	3.00	3.15
c	0.24	0.26	0.35
D	6.30	6.50	6.70
e		2.30	
e1		4.60	
E	3.30	3.50	3.70
H	6.70	7.00	7.30
V			10°

Figure 14. Drawing dimension SOT-223

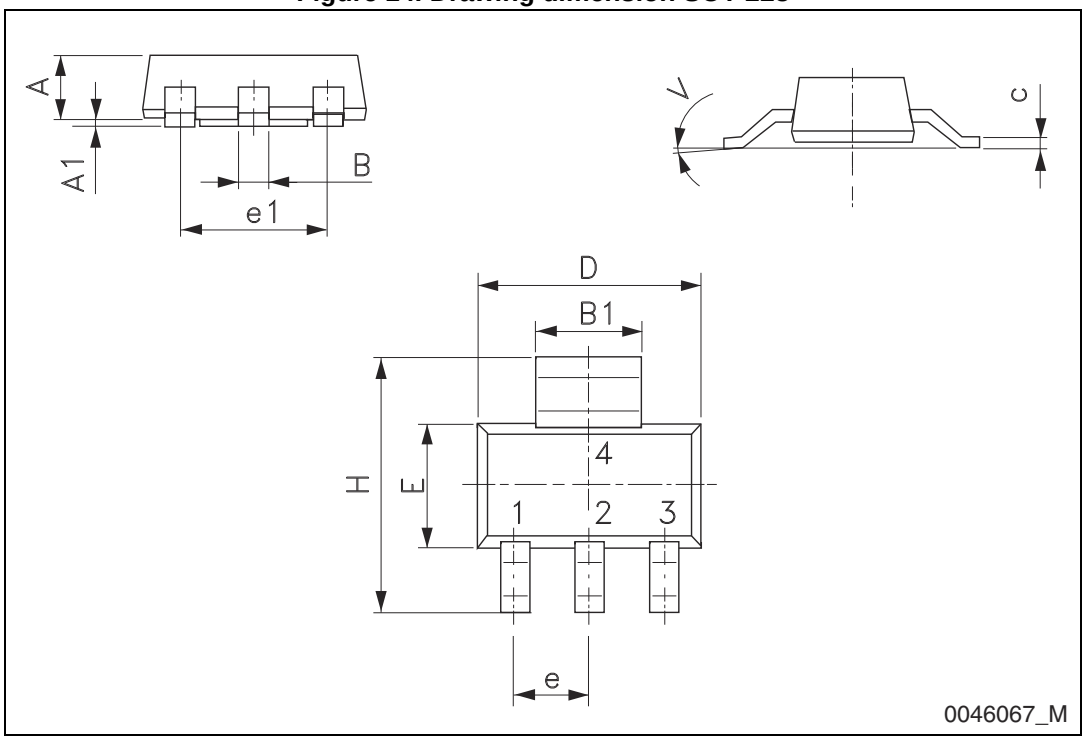

Table 18. SO-8 mechanical data

Dim.	mm		
	Min.	Typ.	Max.
A			1.75
A1	0.10		0.25
A2	1.25		
b	0.28		0.48
c	0.17		0.23
D	4.80	4.90	5.00
E	5.80	6.00	6.20
E1	3.80	3.90	4.00
e		1.27	
h	0.25		0.50
L	0.40		1.27
L1		1.04	
k	0°		8°
ccc			0.10

Figure 15. Drawing dimension SO-8

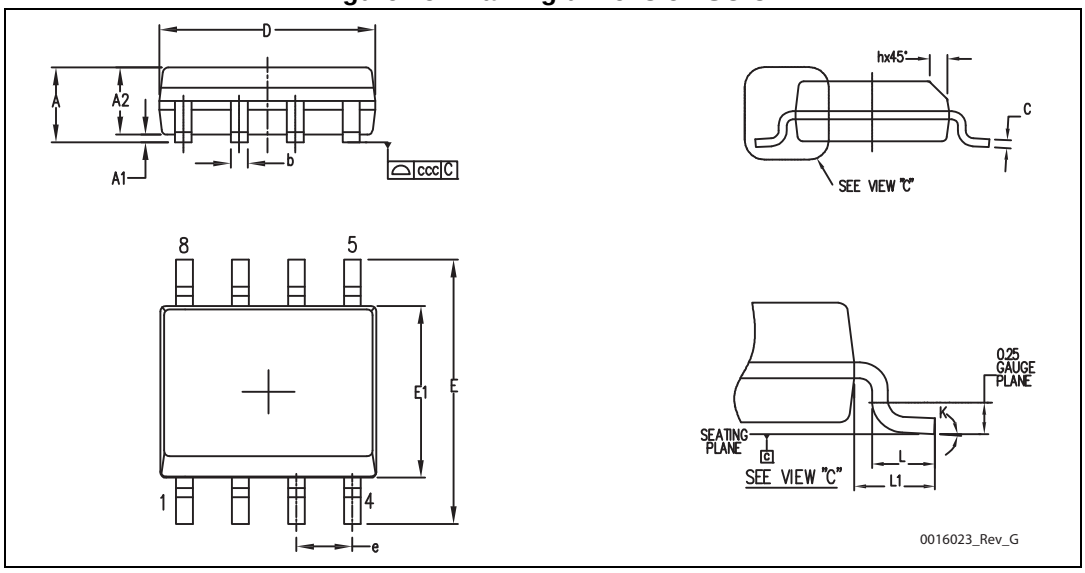

Table 19. DPAK mechanical data

Dim.	Type STD-ST			Type Fujitsu-subcon.			Type IDS-subcon		
	mm.			mm.			mm.		
	Min.	Typ.	Max.	Min.	Typ.	Max.	Min.	Typ.	Max.
A	2.20		2.40	2.25	2.30	2.35	2.19		2.38
A1	0.90		1.10	0.96		1.06	0.89		1.14
A2	0.03		0.23	0		0.10	0.03		0.23
b	0.64		0.90	0.76		0.86	0.64		0.88
b4	5.20		5.40	5.28		5.38	5.21		5.46
c	0.45		0.60	0.46		0.56	0.46		0.58
c2	0.48		0.60	0.46		0.56	0.46		0.58
D	6.00		6.20	6.05		6.15	5.97		6.22
D1		5.10		5.27		5.47		5.20	
E	6.40		6.60	6.55	6.60	6.65	6.35		6.73
E1		4.70			4.77			4.70	
e		2.28		2.23	2.28	2.33		2.28	
e1	4.40		4.60				4.51		4.61
H	9.35		10.10	9.90		10.30	9.40		10.42
L	1.00			1.40		1.60	0.90		
L1		2.80					2.50		2.65
L2		0.80		1.03		1.13	0.89		1.27
L4	0.60		1.00	0.70		0.90	0.64		1.02
R		0.20			0.40			0.20	
V2	0°		8°	0°		8°	0°		8°

Note: The DPAK package coming from the two subcontractors (Fujitsu and IDS) are fully compatible with the ST's package suggested footprint.

Figure 16. Drawing dimension DPAK (type STD-ST)

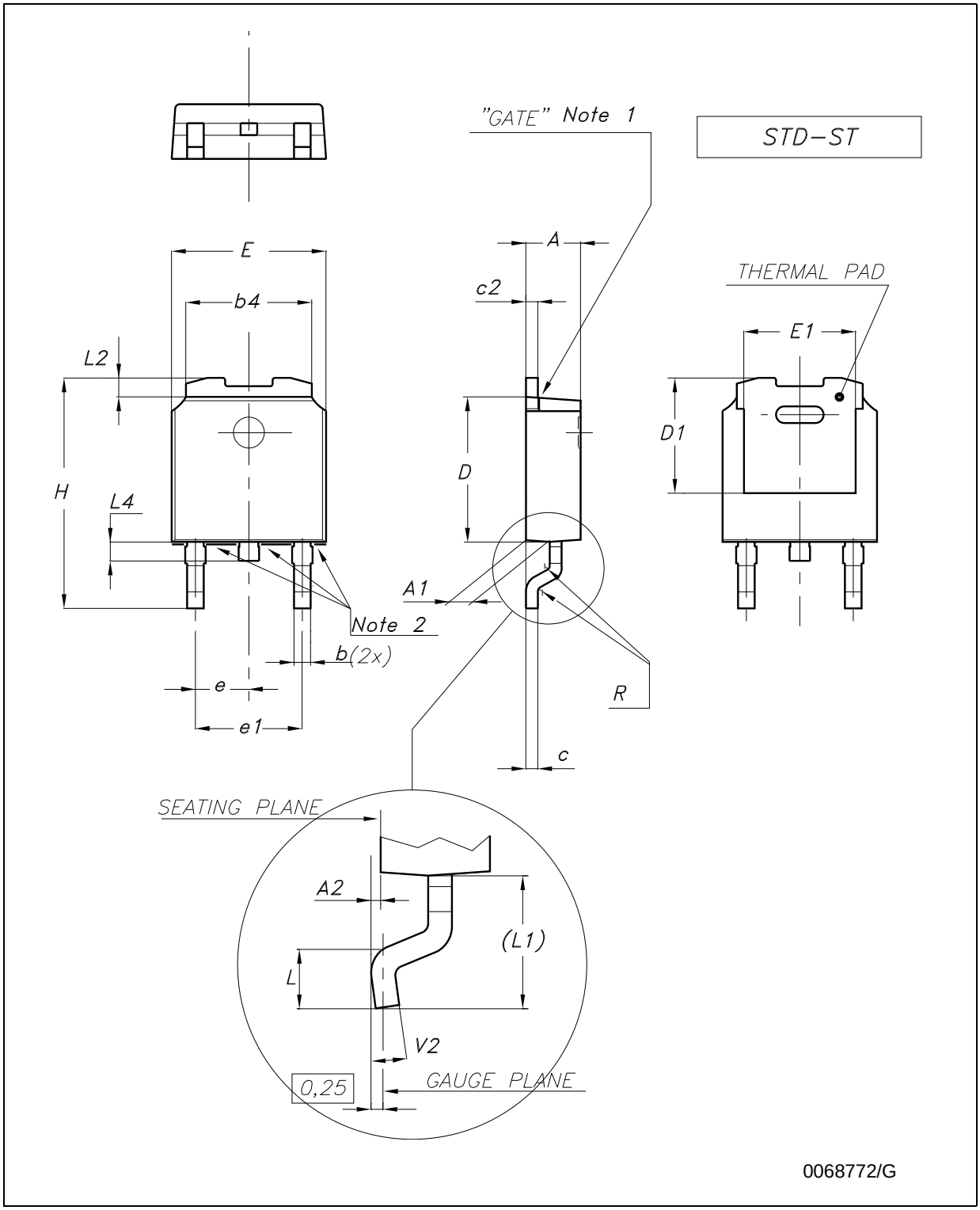

Note: 1 Maximum resin gate protrusion: 0.5 mm.

2 Maximum resin protrusion: 0.25 mm.

Figure 17. Drawing dimension DPAK (type Fujitsu-subcon.)

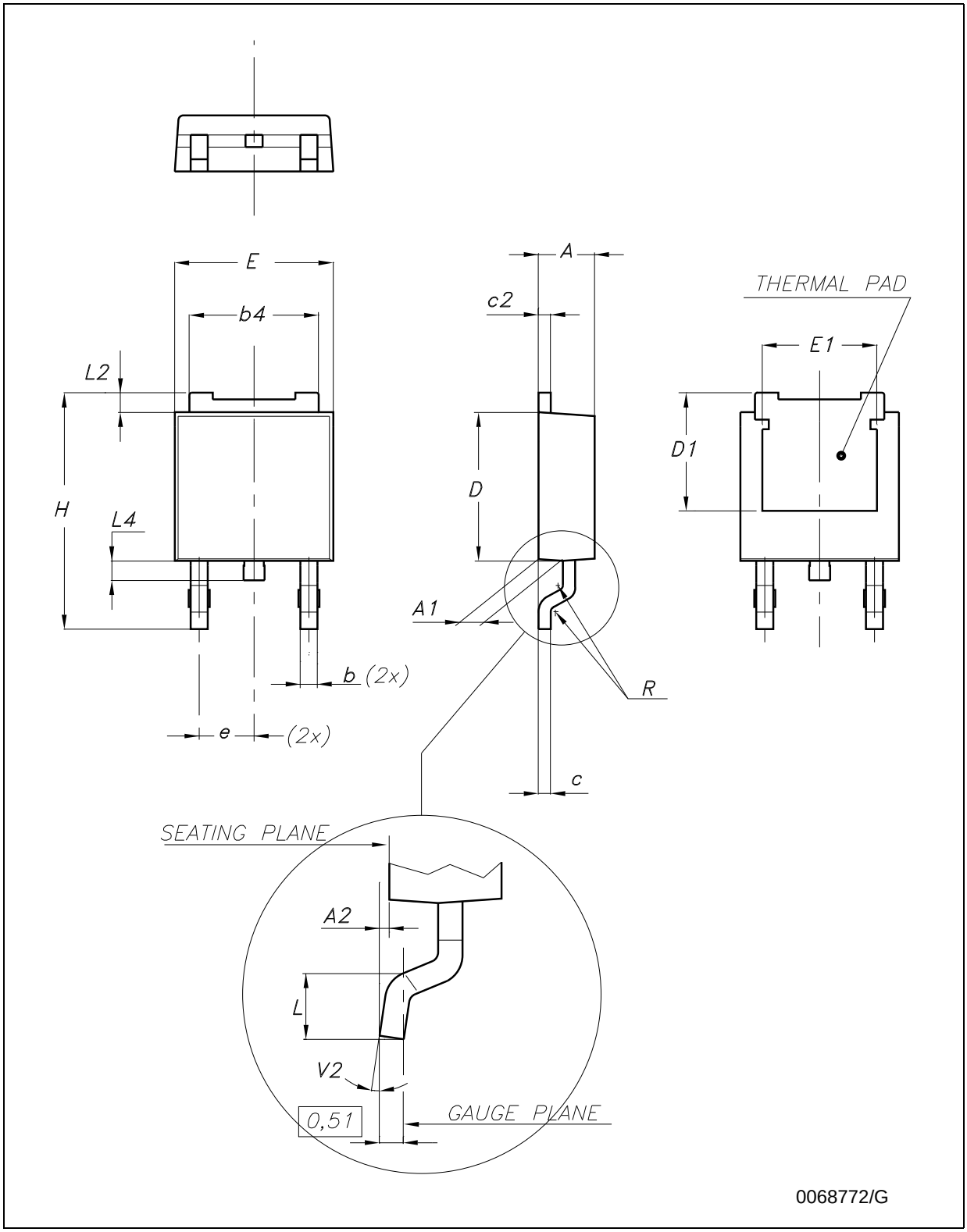

Figure 18. Drawing dimension DPAK (type IDS-subcon.)

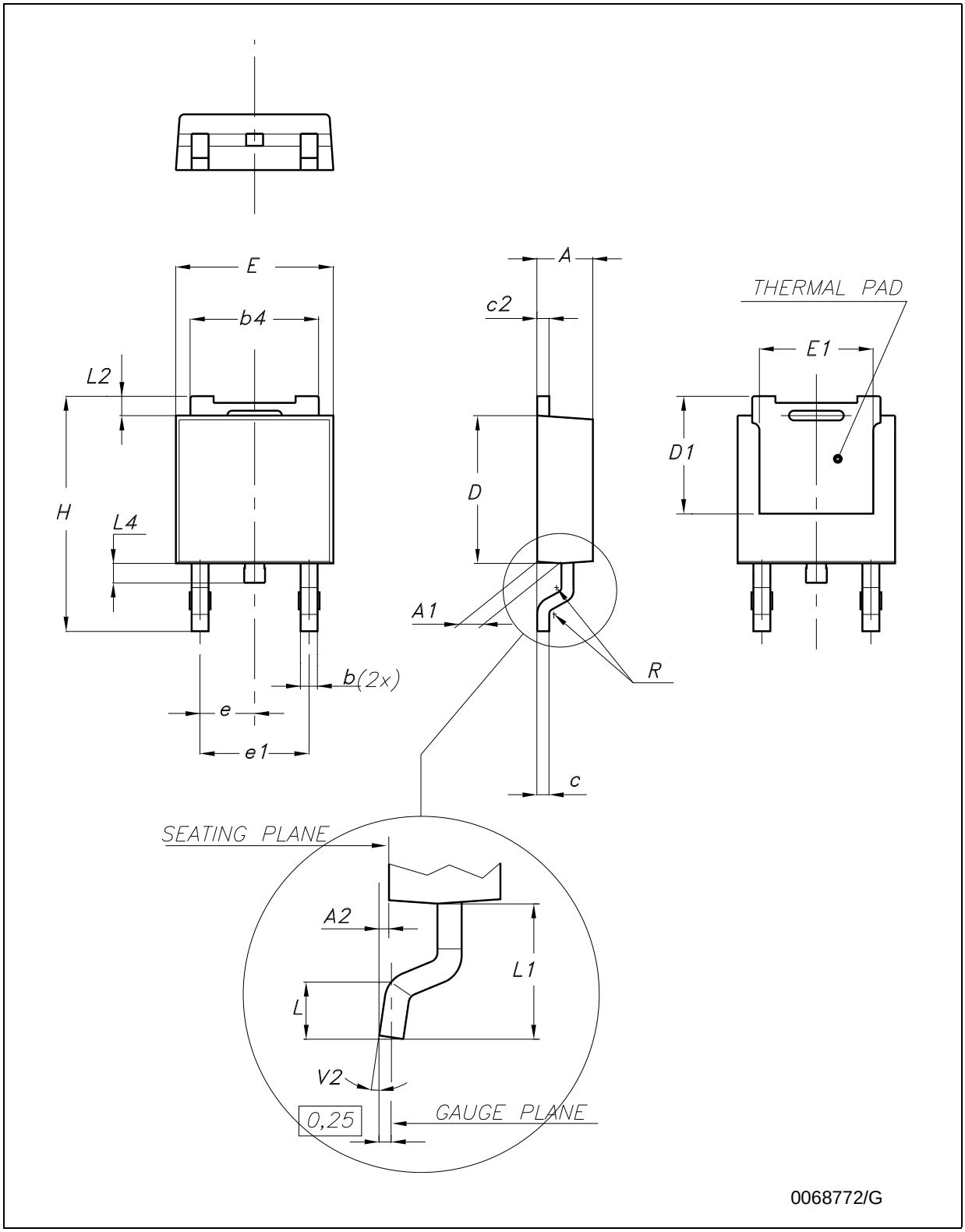

Table 20. Footprint data

Values		
	mm.	inch.
A	6.70	0.264
B	6.70	0.64
C	1.8	0.070
D	3.0	0.118
E	1.60	0.063
F	2.30	0.091
G	2.30	0.091

Figure 19. DPAK footprint recommended data

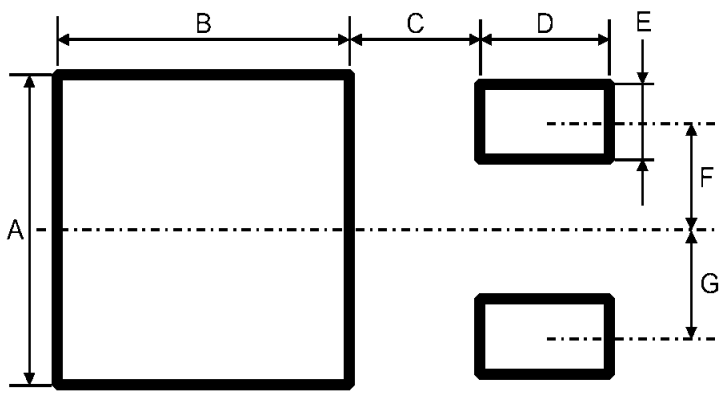

9 Packaging mechanical data

Figure 20. Drawing dimension tube for TO-220 Dual Gauge (mm.)

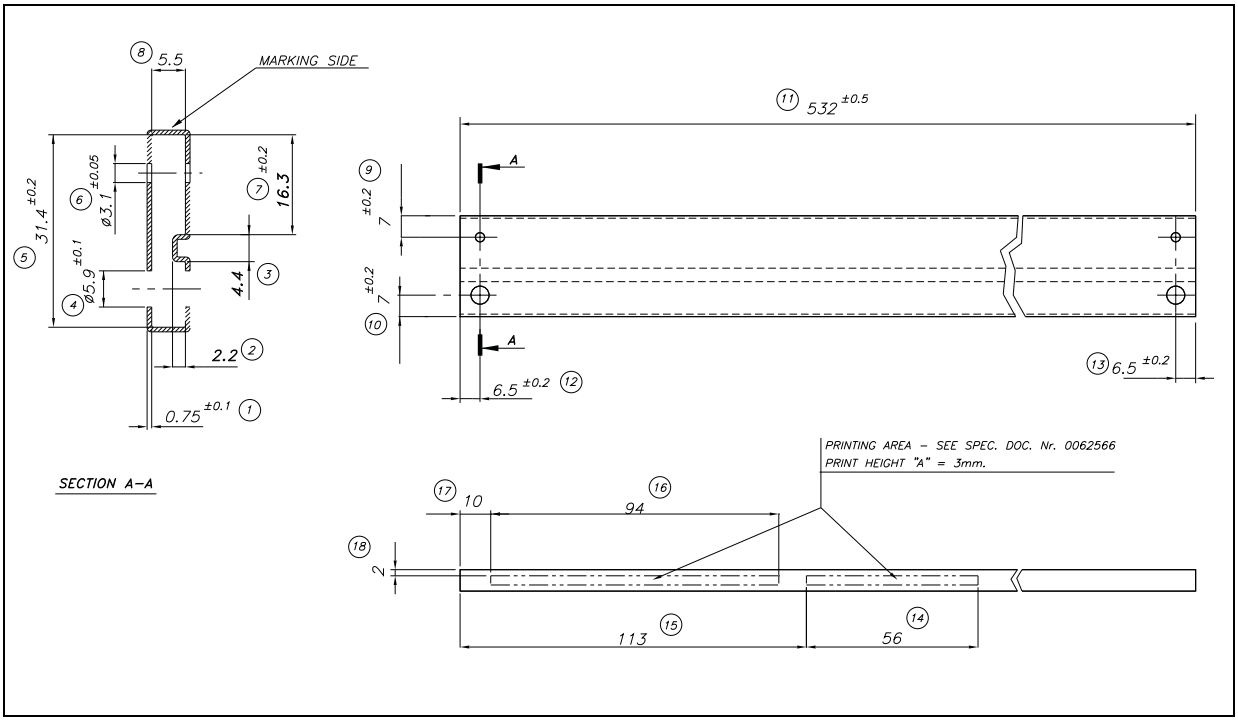

Figure 21. Drawing dimension tube for TO-220 Single Gauge (mm.)

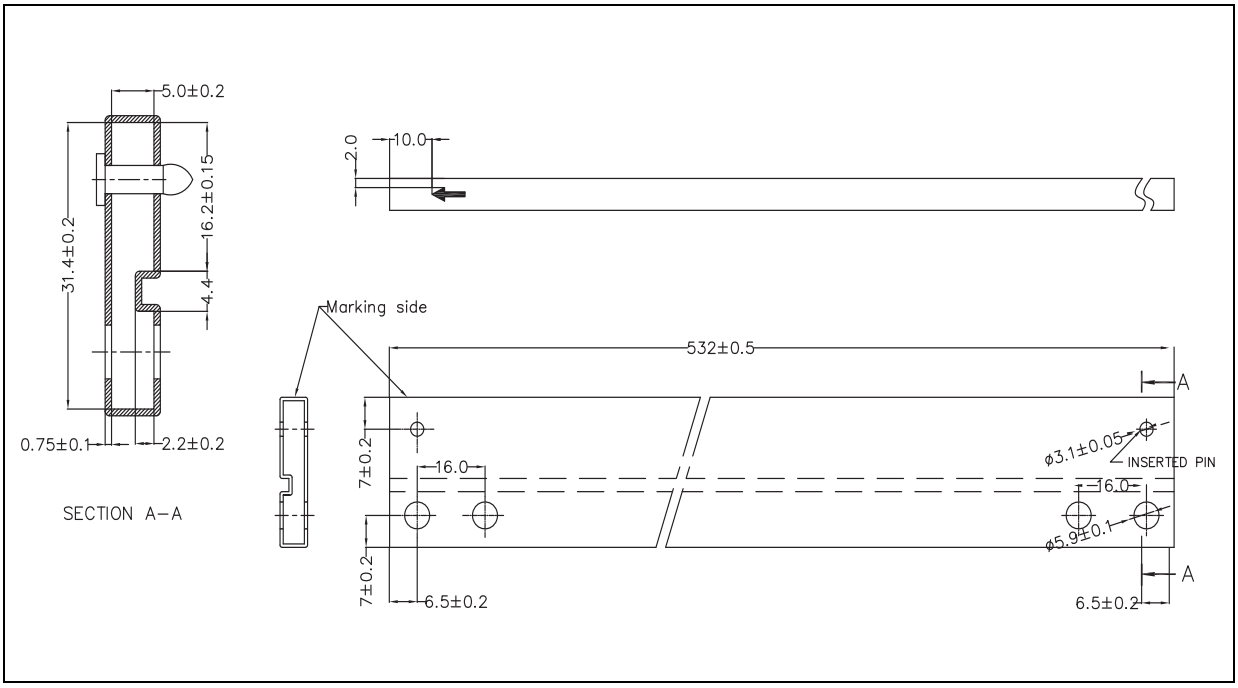

Table 21. SOT-223 tape and reel mechanical data

Tape				Reel		
Dim.	mm			Dim.	mm	
	Min.	Typ.	Max.		Min.	Max.
A0	6.75	6.85	6.95	A		180
B0	7.30	7.40	7.50	N	60	
K0	1.80	1.90	2.00	W1		12.4
F	5.40	5.50	5.60	W2		18.4
E	1.65	1.75	1.85	W3	11.9	15.4
W	11.7	12	12.3			
P2	1.90	2	2.10	Base quantity pcs		1000
P0	3.90	4	4.10	Bulk quantity pcs		1000
P1	7.90	8	8.10			
T	0.25	0.30	0.35			
Dϕ	1.50	1.55	1.60			
D1ϕ	1.50	1.60	1.70			

Figure 22. Tape for SOT-223 (dimensions are in mm)

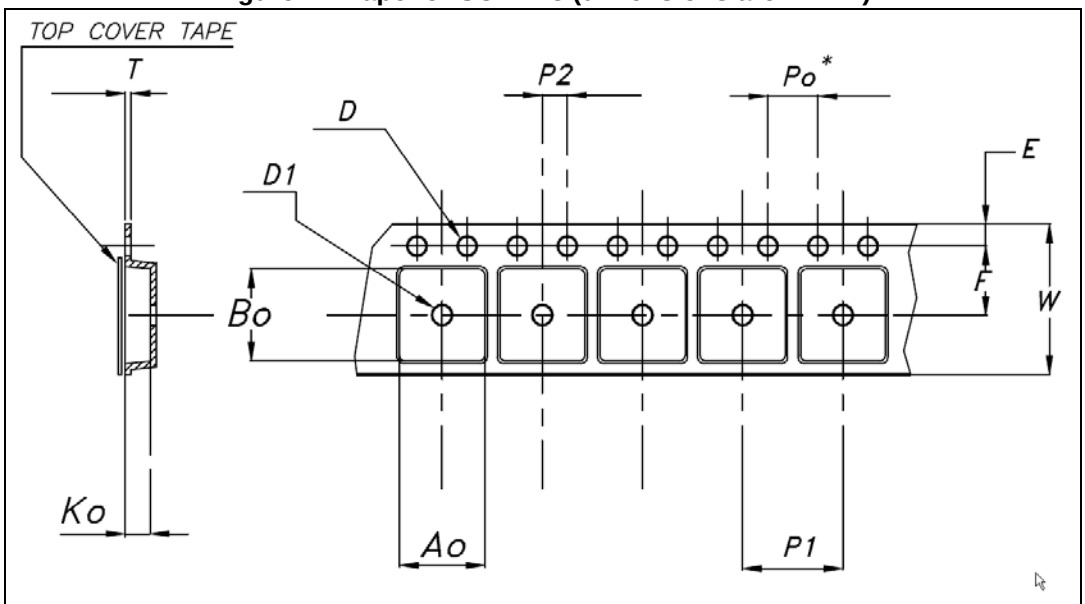

*Cumulative tolerance of 10 sprocket holes is ±0.20 mm

Figure 23. Reel for SOT-223 (dimensions are in mm)

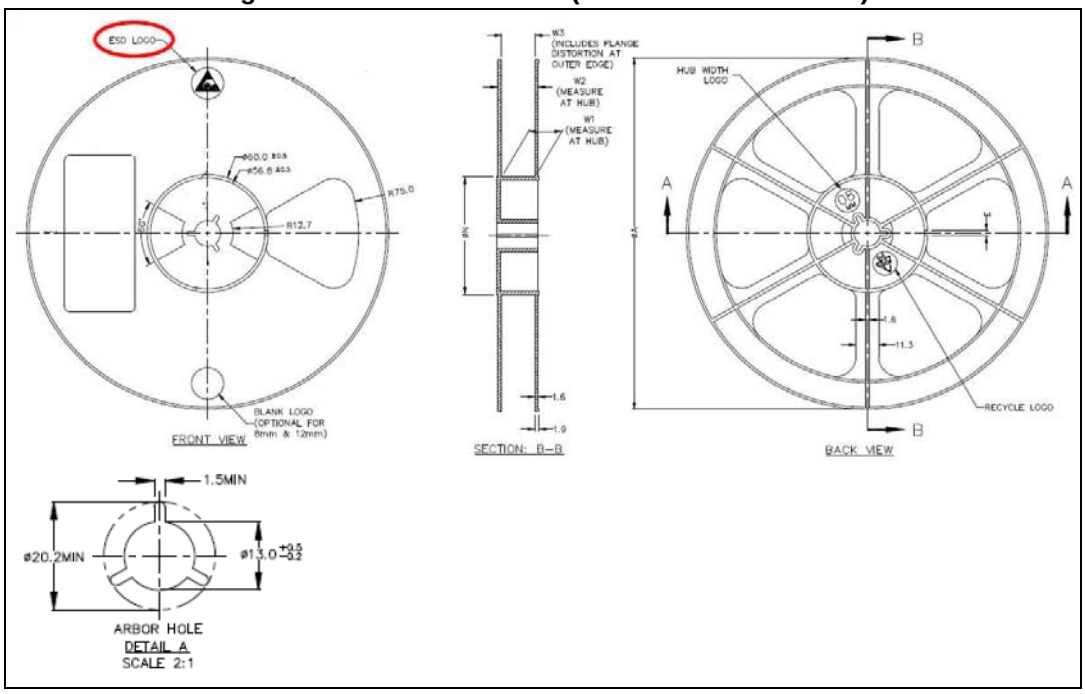

Table 22. SO-8 tape and reel mechanical data

Dim.	mm		
	Min.	Typ.	Max.
A			330
C	12.8		13.2
D	20.2		
N	60		
T			22.4
Ao	8.1		8.5
Bo	5.5		5.9
Ko	2.1		2.3
Po	3.9		4.1
P	7.9		8.1

Figure 24. SO-8 tape and reel dimensions

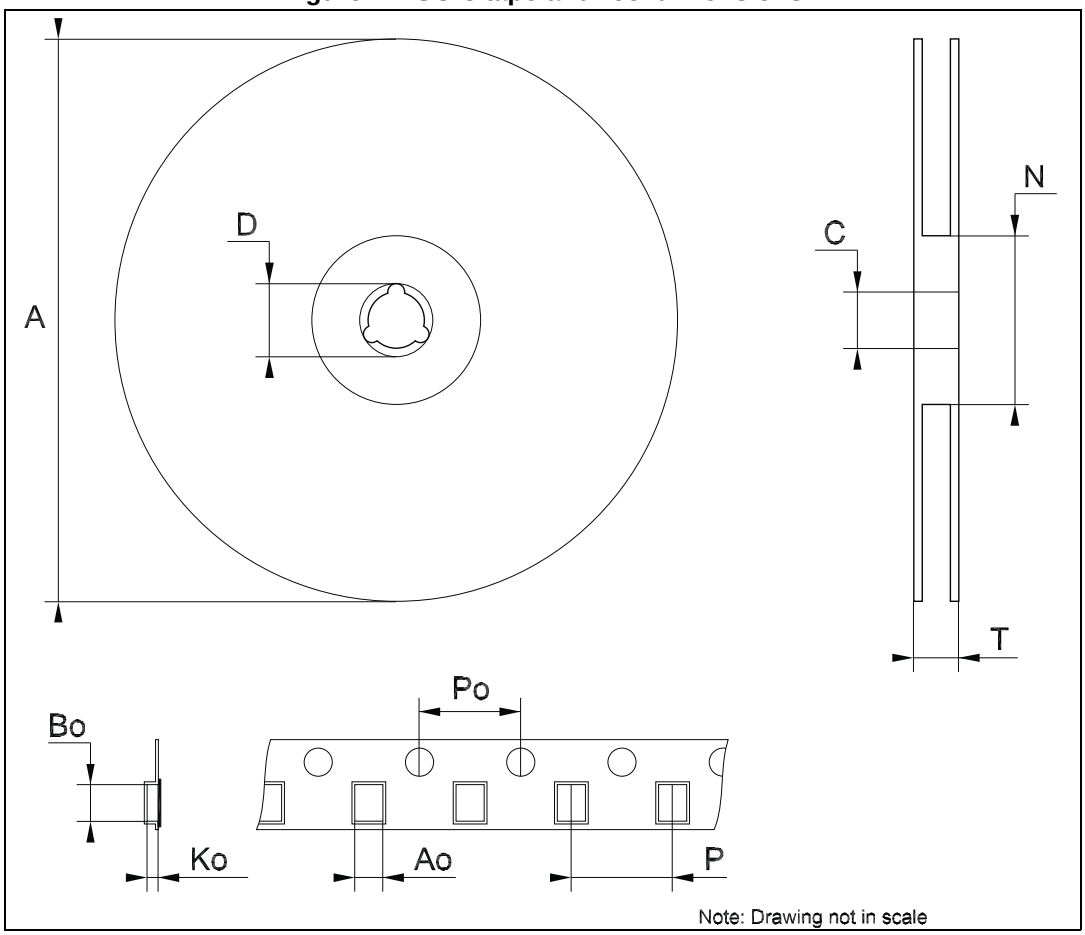

Table 23. DPAK tape and reel mechanical data

Tape			Reel		
Dim.	mm		Dim.	mm	
	Min.	Max.		Min.	Max.
A0	6.8	7	A		330
B0	10.4	10.6	B	1.5	
B1		12.1	C	12.8	13.2
D	1.5	1.6	D	20.2	
D1	1.5		G	16.4	18.4
E	1.65	1.85	N	50	
F	7.4	7.6	T		22.4
K0	2.55	2.75			
P0	3.9	4.1	Base qty.		2500
P1	7.9	8.1	Bulk qty.		2500
P2	1.9	2.1			
R	40				
T	0.25	0.35			
W	15.7	16.3			

Figure 25. DPAK footprint[a]

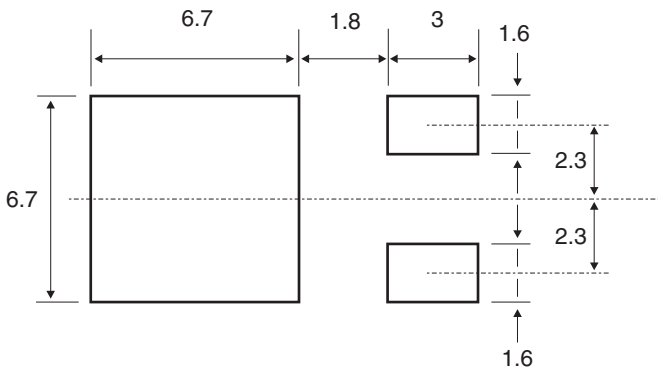

a. All dimensions are in millimeters

Figure 26. Tape for DPAK

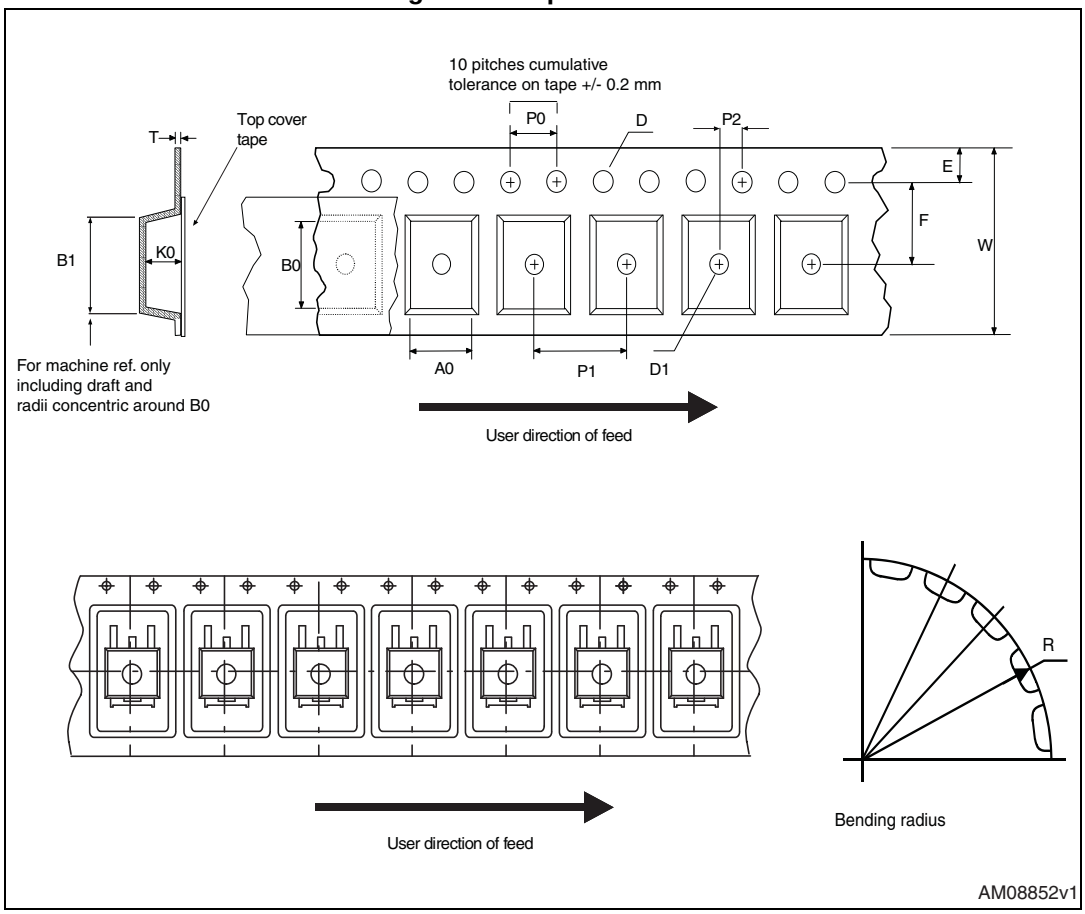

Figure 27. Reel for DPAK

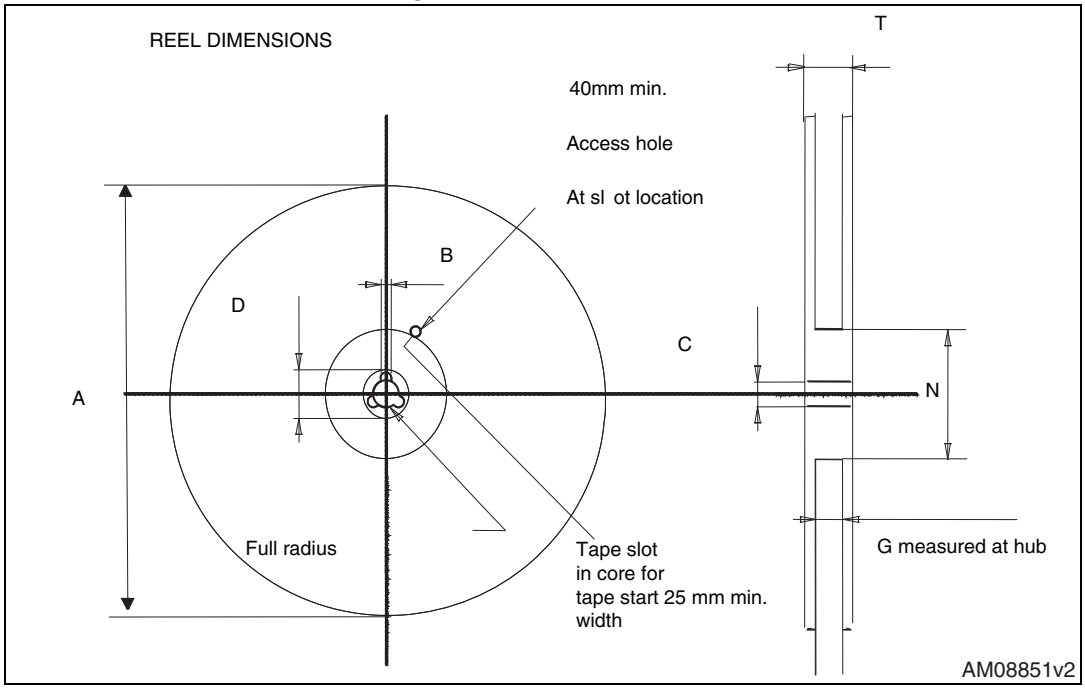

10 Order codes

Table 24. Order codes

Packages					
SOT-223	**SO-8**	**DPAK (Tape and reel)**	**TO-220**	**TO-220 (Dual Gauge)**	**Output voltages**
LD1117S12TR		LD1117DT12TR			1.2 V
LD1117S12CTR		LD1117DT12CTR			1.2 V
LD1117S18TR		LD1117DT18TR	LD1117V18		1.8 V
LD1117S18CTR		LD1117DT18CTR			1.8 V
LD1117S25TR		LD1117DT25TR			2.5 V
LD1117S25CTR		LD1117DT25CTR			2.5 V
LD1117S33TR	LD1117D33TR	LD1117DT33TR	LD1117V33	LD1117V33-DG	3.3 V
				LD1117V33C-DG	3.3 V
LD1117S33CTR	LD1117D33CTR	LD1117DT33CTR	LD1117V33C		3.3 V
LD1117S50TR		LD1117DT50TR	LD1117V50	LD1117V50-DG	5 V
					5 V
LD1117S50CTR		LD1117DT50CTR	LD1117V50C		5 V
LD1117STR		LD1117DTTR	LD1117V	LD1117V-DG	ADJ from 1.25 to 15 V
					ADJ from 1.25 to 15 V
LD1117SC-R		LD1117DTC-R			ADJ from 1.25 to 15 V

11 Revision history

Table 25. Document revision history

Date	Revision	Changes
22-Sep-2004	15	Add new part number #12C; typing error: note on table 2.
25-Oct-2004	16	Add V_{ref} reference voltage on table 12.
18-Jul-2005	17	The DPAK mechanical data updated.
25-Nov-2005	18	The TO220FM package removed.
14-Dec-2005	19	The T_{op} on table 2 updated.
06-Dec-2006	20	DPAK mechanical data updated and added footprint data.
05-Apr-2007	21	Order codes updated.
30-Nov-2007	22	Added *Table 1*.
16-Apr-2008	23	Modified: *Table 24 on page 42*.
08-Jul-2008	24	Added note *1. on page 7*.
30-Mar-2009	25	Modified: V_{IN} max value *Table 4 on page 10* and *Figure 9 on page 23*.
29-Jul-2009	26	Modified: *Table 24 on page 42*.
03-Feb-2010	27	Modified *Table 9 on page 15*.
22-Mar-2010	28	Added: *Table 16 on page 22*, *Figure 13 on page 23*, *Figure 14 on page 24*, *Figure 17* and *Figure 18 on page 33*.
15-Nov-2010	29	Modified: R_{thJC} value for TO-220 *Table 2 on page 7*.
30-Nov-2011	30	Added: order code LD1117V33-DG *Table 24 on page 42*.
13-Feb-2012	31	Added: order codes LD1117V50-DG and LD1117V-DG *Table 24 on page 42*.
19-Oct-2012	32	Added: R_{thJA} value for DPAK, SOT-223 and SO-8*Table 2 on page 7*.
20-Nov-2013	33	Part number LD1117xx changed to LD1117. Updated the Description in cover page, *Section 8: Package mechanical data* and *Table 24: Order codes*. Cancelled Table 1: Device summary. Added *Section 9: Packaging mechanical data*. Minor text changes.

Please Read Carefully:

Information in this document is provided solely in connection with ST products. STMicroelectronics NV and its subsidiaries (“ST”) reserve the right to make changes, corrections, modifications or improvements, to this document, and the products and services described herein at any time, without notice.

All ST products are sold pursuant to ST’s terms and conditions of sale.

Purchasers are solely responsible for the choice, selection and use of the ST products and services described herein, and ST assumes no liability whatsoever relating to the choice, selection or use of the ST products and services described herein.

No license, express or implied, by estoppel or otherwise, to any intellectual property rights is granted under this document. If any part of this document refers to any third party products or services it shall not be deemed a license grant by ST for the use of such third party products or services, or any intellectual property contained therein or considered as a warranty covering the use in any manner whatsoever of such third party products or services or any intellectual property contained therein.

UNLESS OTHERWISE SET FORTH IN ST’S TERMS AND CONDITIONS OF SALE ST DISCLAIMS ANY EXPRESS OR IMPLIED WARRANTY WITH RESPECT TO THE USE AND/OR SALE OF ST PRODUCTS INCLUDING WITHOUT LIMITATION IMPLIED WARRANTIES OF MERCHANTABILITY, FITNESS FOR A PARTICULAR PURPOSE (AND THEIR EQUIVALENTS UNDER THE LAWS OF ANY JURISDICTION), OR INFRINGEMENT OF ANY PATENT, COPYRIGHT OR OTHER INTELLECTUAL PROPERTY RIGHT.

ST PRODUCTS ARE NOT DESIGNED OR AUTHORIZED FOR USE IN: (A) SAFETY CRITICAL APPLICATIONS SUCH AS LIFE SUPPORTING, ACTIVE IMPLANTED DEVICES OR SYSTEMS WITH PRODUCT FUNCTIONAL SAFETY REQUIREMENTS; (B) AERONAUTIC APPLICATIONS; (C) AUTOMOTIVE APPLICATIONS OR ENVIRONMENTS, AND/OR (D) AEROSPACE APPLICATIONS OR ENVIRONMENTS. WHERE ST PRODUCTS ARE NOT DESIGNED FOR SUCH USE, THE PURCHASER SHALL USE PRODUCTS AT PURCHASER’S SOLE RISK, EVEN IF ST HAS BEEN INFORMED IN WRITING OF SUCH USAGE, UNLESS A PRODUCT IS EXPRESSLY DESIGNATED BY ST AS BEING INTENDED FOR “AUTOMOTIVE, AUTOMOTIVE SAFETY OR MEDICAL” INDUSTRY DOMAINS ACCORDING TO ST PRODUCT DESIGN SPECIFICATIONS. PRODUCTS FORMALLY ESCC, QML OR JAN QUALIFIED ARE DEEMED SUITABLE FOR USE IN AEROSPACE BY THE CORRESPONDING GOVERNMENTAL AGENCY.

Resale of ST products with provisions different from the statements and/or technical features set forth in this document shall immediately void any warranty granted by ST for the ST product or service described herein and shall not create or extend in any manner whatsoever, any liability of ST.

ST and the ST logo are trademarks or registered trademarks of ST in various countries.
Information in this document supersedes and replaces all information previously supplied.
The ST logo is a registered trademark of STMicroelectronics. All other names are the property of their respective owners.

© 2013 STMicroelectronics - All rights reserved

STMicroelectronics group of companies

Australia - Belgium - Brazil - Canada - China - Czech Republic - Finland - France - Germany - Hong Kong - India - Israel - Italy - Japan - Malaysia - Malta - Morocco - Philippines - Singapore - Spain - Sweden - Switzerland - United Kingdom - United States of America

www.st.com