74LVC163

Presettable synchronous 4-bit binary counter; synchronous reset

Rev. 6 — 20 November 2012 Product data sheet

1. General description

The 74LVC163 is a synchronous presettable binary counter which features an internal look-ahead carry and can be used for high-speed counting. Synchronous operation is provided by having all flip-flops clocked simultaneously on the positive-going edge of the clock (pin CP). The outputs (pins Q0 to Q3) of the counters may be preset to a HIGH-level or LOW-level. A LOW-level at the parallel enable input (pin $\overline{PE}$) disables the counting action and causes the data at the data inputs (pins D0 to D3) to be loaded into the counter on the positive-going edge of the clock (provided that the set-up and hold time requirements for PE are met). Preset takes place regardless of the levels at count enable inputs (pin CEP and CET). A LOW-level at the master reset input (pin $\overline{MR}$) sets all four outputs of the flip-flops (pins Q0 to Q3) to LOW-level after the next positive-going transition on the clock input (pin CP) (provided that the set-up and hold time requirements for PE are met). This action occurs regardless of the levels at input pins $\overline{PE}$, CET and CEP. This synchronous reset feature enables the designer to modify the maximum count with only one external NAND gate.

The look-ahead carry simplifies serial cascading of the counters. Both count enable inputs (pin CEP and CET) must be HIGH in count. The CET input is fed forward to enable the terminal count output (pin TC). The TC output thus enabled will produce a HIGH output pulse of a duration approximately equal to a HIGH-level output of Q0. This pulse can be used to enable the next cascaded stage.

The maximum clock frequency for the cascaded counters is determined by t_{PHL} (propagation delay CP to TC) and t_{su} (set-up time CEP to CP) according to the formula: $f_{max} = \frac{1}{t_{PHL(max)} + t_{su}}$.

2. Features and benefits

- Wide supply voltage range from 1.2 V to 3.6 V
- Inputs accept voltages up to 5.5 V
- CMOS low power consumption
- Direct interface with TTL levels
- Synchronous reset
- Synchronous counting and loading
- Two count enable inputs for n-bit cascading
- Positive edge-triggered clock
- Complies with JEDEC standard:
  - JESD8-7A (1.65 V to 1.95 V)
  - JESD8-5A (2.3 V to 2.7 V)

sales@prom-elec.com / ООО ПРОМЭЛЕКТРОНИКА

- JESD8-C/JESD36 (2.7 V to 3.6 V)
- ESD protection:
  - HBM JESD22-A114F exceeds 2000 V
  - MM JESD22-A115-B exceeds 200 V
  - CDM JESD22-C101E exceeds 1000 V
- Specified from –40 °C to +85 °C and –40 °C to 125 °C

3. Ordering information

Table 1. Ordering information

Type number	Package			
	Temperature range	Name	Description	Version
74LVC163D	–40 °C to +125 °C	SO16	plastic small outline package; 16 leads; body width 3.9 mm	SOT109-1
74LVC163DB	–40 °C to +125 °C	SSOP16	plastic shrink small outline package; 16 leads; body width 5.3 mm	SOT338-1
74LVC163PW	–40 °C to +125 °C	TSSOP16	plastic thin shrink small outline package; 16 leads; body width 4.4 mm	SOT403-1
74LVC163BQ	–40 °C to +125 °C	DHVQFN16	plastic dual in-line compatible thermal enhanced very thin quad flat package; no leads; 16 terminals; body 2.5 × 3.5 × 0.85 mm	SOT763-1

4. Functional diagram

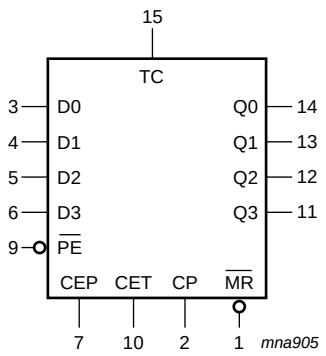

Fig 1. Logic diagram

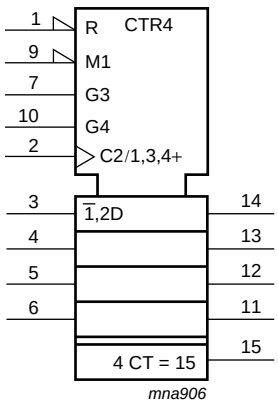

Fig 2. IEC logic symbol

All information provided in this document is subject to legal disclaimers.

© Nexperia B.V. 2017. All rights reserved

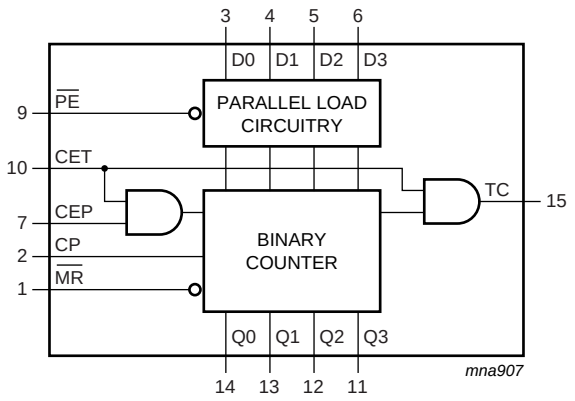

Fig 3. Functional diagram

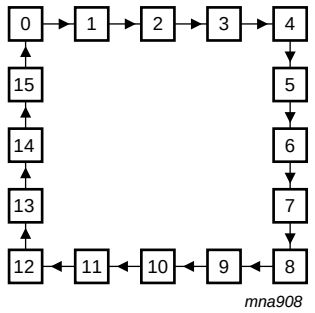

Fig 4. State diagram

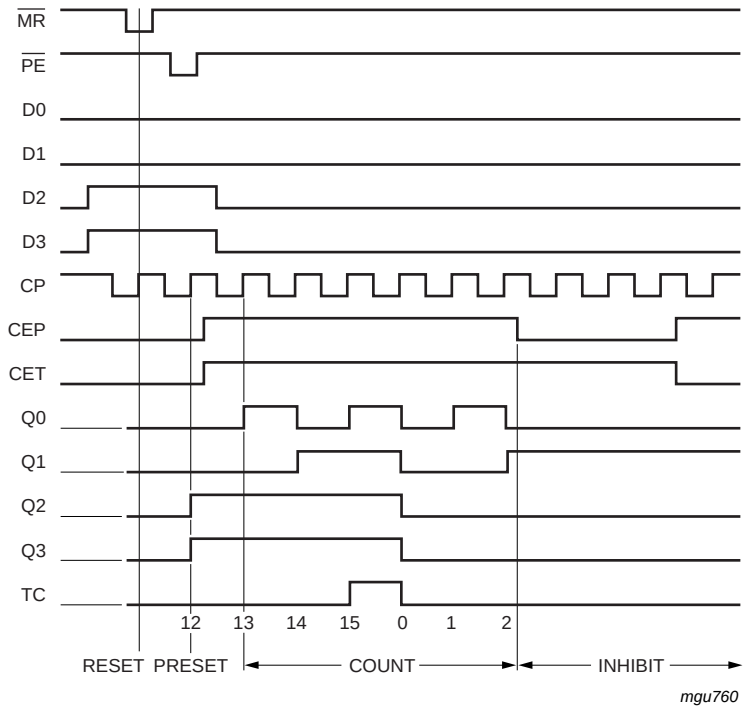

Typical timing sequence: Reset outputs to zero; preset to binary twelve; count to thirteen, fourteen, fifteen, zero, one and two; inhibit.

Fig 5. Timing sequence

All information provided in this document is subject to legal disclaimers.

© Nexperia B.V. 2017. All rights reserved

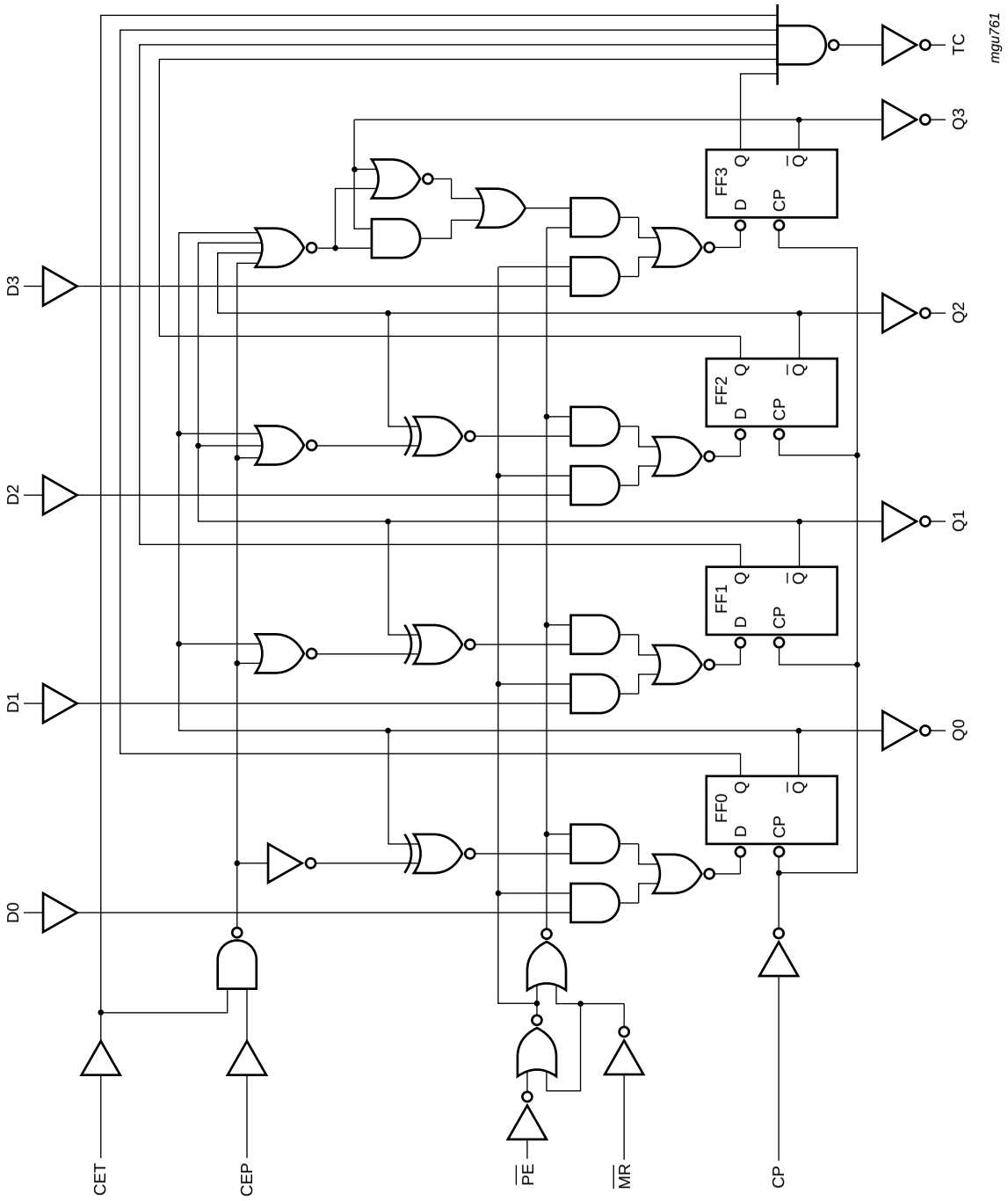

Fig 6. Logic diagram

All information provided in this document is subject to legal disclaimers.

5. Pinning information

5.1 Pinning

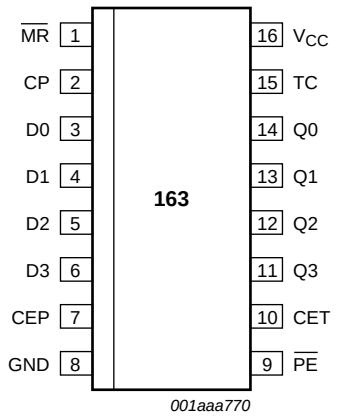

Fig 7. Pin configuration for SO16 and (T)SSOP16

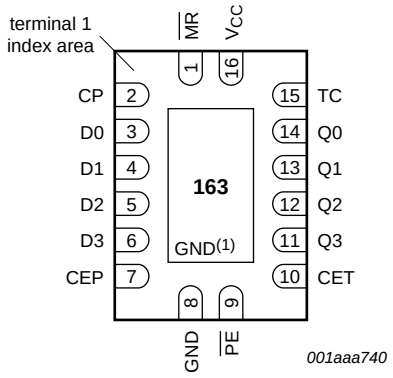

Transparent top view

(1) This is not a supply pin. The substrate is attached to this pad using conductive die attach material. There is no electrical or mechanical requirement to solder this pad. However, if it is soldered, the solder land should remain floating or be connected to GND.

Fig 8. Pin configuration for DHVQFN16

5.2 Pin description

Table 2. Pin description

Symbol	Pin	Description
$\overline{MR}$	1	synchronous master reset (active LOW)
CP	2	clock input (LOW-to-HIGH, edge-triggered)
D[0:3]	3, 4, 5, 6	data input
CEP	7	count enable input
GND	8	ground (0)
$\overline{PE}$	9	parallel enable input (active LOW)
CET	10	count enable carry input
Q[0:3]	14, 13, 12, 11	flip-flop output
TC	15	terminal count output
V_{CC}	16	supply voltage

All information provided in this document is subject to legal disclaimers.

© Nexperia B.V. 2017. All rights reserved

6. Functional description

Table 3. Functional table[1]

Operating modes	Input						Output	
	$\overline{MR}$	CP	CEP	CET	$\overline{PE}$	Dn	Qn	TC
Reset (clear)	l	↑	X	X	X	X	L	L
Parallel load	h	↑	X	X	l	l	L	L
	h	↑	X	X	l	h	H	*
Count	h	↑	h	h	h	X	count	*
Hold (do nothing)	h	X	l	X	h	X	q_n	*
	h	X	X	l	h	X	q_n	L

[1] * = the TC output is HIGH when CET is HIGH and the counter is at terminal count (HHHH)
H = HIGH voltage level
h = HIGH voltage level one set-up time prior to the LOW-to-HIGH clock transition
L = LOW voltage level
l = LOW voltage level one set-up time prior to the LOW-to-HIGH clock transition
q = lower case letters indicate the state of the referenced output one set-up time prior to the LOW-to-HIGH clock transition
X = don't care
↑ = LOW-to-HIGH clock transition

7. Limiting values

Table 4. Limiting values

In accordance with the Absolute Maximum Rating System (IEC 60134). Voltages are referenced to GND (ground = 0 V).

Symbol	Parameter	Conditions		Min	Max	Unit
V_{CC}	supply voltage			–0.5	+6.5	V
I_{IK}	input clamping current	V_I < 0 V		–50	-	mA
V_I	input voltage		[1]	–0.5	+6.5	V
I_{OK}	output clamping current	V_O > V_{CC} or V_O < 0 V		-	±50	mA
V_O	output voltage		[2]	–0.5	V_{CC} + 0.5	V
I_O	output current	V_O = 0 V to V_{CC}		-	±50	mA
I_{CC}	supply current			-	100	mA
I_{GND}	ground current			–100	-	mA
T_{stg}	storage temperature			–65	+150	°C
P_{tot}	total power dissipation	T_{amb} = –40 °C to +125 °C	[3]	-	500	mW

[1] The minimum input voltage ratings may be exceeded if the input current ratings are observed.

[2] The output voltage ratings may be exceeded if the output current ratings are observed.

[3] For SO16 packages: above 70 °C the value of P_{tot} derates linearly with 8 mW/K.
For (T)SSOP16 packages: above 60 °C the value of P_{tot} derates linearly with 5.5 mW/K.
For DHVQFN16 packages: above 60 °C the value of P_{tot} derates linearly with 4.5 mW/K.

All information provided in this document is subject to legal disclaimers.

© Nexperia B.V. 2017. All rights reserved

8. Recommended operating conditions

Table 5. Recommended operating conditions

Symbol	Parameter	Conditions	Min	Typ	Max	Unit
V_{CC}	supply voltage		1.65	-	3.6	V
		functional	1.2	-	-	V
V_I	input voltage		0	-	5.5	V
V_O	output voltage		0	-	V_{CC}	V
T_{amb}	ambient temperature	in free air	–40	-	+125	°C
$\Delta t/\Delta V$	input transition rise and fall rate	V_{CC} = 1.65 V to 2.7 V	0	-	20	ns/V
		V_{CC} = 2.7 V to 3.6 V	0	-	10	ns/V

9. Static characteristics

Table 6. Static characteristics

At recommended operating conditions. Voltages are referenced to GND (ground = 0 V).

Symbol	Parameter	Conditions	–40 °C to +85 °C			–40 °C to +125 °C		Unit
			Min	Typ[1]	Max	Min	Max	
V_{IH}	HIGH-level input voltage	V_{CC} = 1.2 V	1.08	-	-	1.08	-	V
		V_{CC} = 1.65 V to 1.95 V	0.65 × V_{CC}	-	-	0.65 × V_{CC}	-	V
		V_{CC} = 2.3 V to 2.7 V	1.7	-	-	1.7	-	V
		V_{CC} = 2.7 V to 3.6 V	2.0	-	-	2.0	-	V
V_{IL}	LOW-level input voltage	V_{CC} = 1.2 V	-	-	0.12	-	0.12	V
		V_{CC} = 1.65 V to 1.95 V	-	-	0.35 × V_{CC}	-	0.35 × V_{CC}	V
		V_{CC} = 2.3 V to 2.7 V	-	-	0.7	-	0.7	V
		V_{CC} = 2.7 V to 3.6 V	-	-	0.8	-	0.8	V
V_{OH}	HIGH-level output voltage	$V_I = V_{IH}$ or V_{IL}						
		I_O = –100 μA; V_{CC} = 1.65 V to 3.6 V	V_{CC} – 0.2	-	-	V_{CC} – 0.3	-	V
		I_O = –4 mA; V_{CC} = 1.65 V	1.2	-	-	1.05	-	V
		I_O = –8 mA; V_{CC} = 2.3 V	1.8	-	-	1.65	-	V
		I_O = –12 mA; V_{CC} = 2.7 V	2.2	-	-	2.05	-	V
		I_O = –18 mA; V_{CC} = 3.0 V	2.4	-	-	2.25	-	V
		I_O = –24 mA; V_{CC} = 3.0 V	2.2	-	-	2.0	-	V
V_{OL}	LOW-level output voltage	$V_I = V_{IH}$ or V_{IL}						
		I_O = 100 μA; V_{CC} = 1.65 V to 3.6 V	-	-	0.2	-	0.3	V
		I_O = 4 mA; V_{CC} = 1.65 V	-	-	0.45	-	0.65	V
		I_O = 8 mA; V_{CC} = 2.3 V	-	-	0.6	-	0.8	V
		I_O = 12 mA; V_{CC} = 2.7 V	-	-	0.4	-	0.6	V
		I_O = 24 mA; V_{CC} = 3.0 V	-	-	0.55	-	0.8	V
I_I	input leakage current	V_{CC} = 3.6 V; V_I = 5.5 V or GND	-	±0.1	±5	-	±20	μA

All information provided in this document is subject to legal disclaimers.

© Nexperia B.V. 2017. All rights reserved

Table 6. Static characteristics *...continued*

At recommended operating conditions. Voltages are referenced to GND (ground = 0 V).

Symbol	Parameter	Conditions	–40 °C to +85 °C			–40 °C to +125 °C		Unit
			Min	Typ[1]	Max	Min	Max	
I_{CC}	supply current	V_{CC} = 3.6 V; V_I = V_{CC} or GND; I_O = 0 A	-	0.1	10	-	40	μA
ΔI_{CC}	additional supply current	per input pin; V_{CC} = 2.7 V to 3.6 V; V_I = V_{CC} − 0.6 V; I_O = 0 A	-	5	500	-	5000	μA
C_I	input capacitance	V_{CC} = 0 V to 3.6 V; V_I = GND to V_{CC}	-	5.0	-	-	-	pF

[1] All typical values are measured at V_{CC} = 3.3 V (unless stated otherwise) and T_{amb} = 25 °C.

10. Dynamic characteristics

Table 7. Dynamic characteristics

Voltages are referenced to GND (ground = 0 V). For test circuit see Figure 14.

Symbol	Parameter	Conditions		–40 °C to +85 °C			–40 °C to +125 °C		Unit
				Min	Typ[1]	Max	Min	Max	
t_{pd}	propagation delay	CP to Qn; see Figure 9	[2]						
		V_{CC} = 1.2 V		-	18	-	-	-	ns
		V_{CC} = 1.65 V to 1.95 V		1.5	7.4	14.5	1.5	16.7	ns
		V_{CC} = 2.3 V to 2.7 V		2.6	4.2	8.1	2.6	9.4	ns
		V_{CC} = 2.7 V		1.5	4.0	7.3	1.5	9.5	ns
		V_{CC} = 3.0 V to 3.6 V		1.5	3.8	7.3	1.5	9.5	ns
		CP to TC; see Figure 9	[2]						
		V_{CC} = 1.2 V		-	23	-	-	-	ns
		V_{CC} = 1.65 V to 1.95 V		1.9	8.5	15.7	1.9	18.1	ns
		V_{CC} = 2.3 V to 2.7 V		3.0	4.8	8.8	3.0	10.2	ns
		V_{CC} = 2.7 V		1.5	4.6	8.1	1.5	10.5	ns
		V_{CC} = 3.0 V to 3.6 V		1.5	4.3	7.9	1.5	10.0	ns
		CET to TC; see Figure 10	[2]						
		V_{CC} = 1.2 V		-	16	-	-	-	ns
		V_{CC} = 1.65 V to 1.95 V		1.5	6.3	12.7	1.5	14.6	ns
		V_{CC} = 2.3 V to 2.7 V		2.3	3.6	7.1	2.3	8.2	ns
		V_{CC} = 2.7 V		1.5	3.9	6.9	1.5	9.0	ns
		V_{CC} = 3.0 V to 3.6 V		1.5	3.3	6.4	1.5	8.0	ns
t_W	pulse width	clock HIGH or LOW; see Figure 9							
		V_{CC} = 1.65 V to 1.95 V		6.0	-	-	6.0	-	ns
		V_{CC} = 2.3 V to 2.7 V		5.0	-	-	5.0	-	ns
		V_{CC} = 2.7 V		5.0	-	-	5.0	-	ns
		V_{CC} = 3.0 V to 3.6 V		4.0	1.2	-	4.0	-	ns

All information provided in this document is subject to legal disclaimers.

© Nexperia B.V. 2017. All rights reserved

Table 7. Dynamic characteristics *...continued*

Voltages are referenced to GND (ground = 0 V). For test circuit see Figure 14.

Symbol	Parameter	Conditions		–40 °C to +85 °C			–40 °C to +125 °C		Unit
				Min	Typ[1]	Max	Min	Max	
t_{su}	set-up time	Dn to CP; see Figure 12							
		V_{CC} = 1.65 V to 1.95 V		5.0	-	-	5.0	-	ns
		V_{CC} = 2.3 V to 2.7 V		4.0	-	-	4.0	-	ns
		V_{CC} = 2.7 V		3.0	-	-	3.0	-	ns
		V_{CC} = 3.0 V to 3.6 V		2.5	1.0	-	2.5	-	ns
		$\overline{MR}$, $\overline{PE}$ to CP; see Figure 12							
		V_{CC} = 1.65 V to 1.95 V		4.5	-	-	4.5	-	ns
		V_{CC} = 2.3 V to 2.7 V		4.0	-	-	4.0	-	ns
		V_{CC} = 2.7 V		3.5	-	-	3.5	-	ns
		V_{CC} = 3.0 V to 3.6 V		3.0	1.2	-	3.0	-	ns
		CEP, CET to CP; see Figure 13							
		V_{CC} = 1.65 V to 1.95 V		8.5	-	-	8.5	-	ns
		V_{CC} = 2.3 V to 2.7 V		6.5	-	-	6.5	-	ns
		V_{CC} = 2.7 V		5.5	-	-	5.5	-	ns
		V_{CC} = 3.0 V to 3.6 V		5.0	2.1	-	5.0	-	ns
t_h	hold time	Dn, $\overline{PE}$, CEP, CET to CP; see Figure 12 and 13							
		V_{CC} = 1.65 V to 1.95 V		2.0	-	-	2.0	-	ns
		V_{CC} = 2.3 V to 2.7 V		2.0	-	-	2.0	-	ns
		V_{CC} = 2.7 V		0.0	-	-	0.0	-	ns
		V_{CC} = 3.0 V to 3.6 V		0.5	0.0	-	0.5	-	ns
f_{max}	maximum frequency	see Figure 9							
		V_{CC} = 1.65 V to 1.95 V		100	-	-	80	-	ns
		V_{CC} = 2.3 V to 2.7 V		125	-	-	100	-	ns
		V_{CC} = 2.7 V		150	-	-	120	-	MHz
		V_{CC} = 3.0 V to 3.6 V		150	200	-	120	-	MHz
$t_{sk(o)}$	output skew time	V_{CC} = 3.0 V to 3.6 V	[3]	-	-	1.0	-	1.5	ns
C_{PD}	power dissipation capacitance	per input; V_I = GND to V_{CC}	[4]						
		V_{CC} = 1.65 V to 1.95 V		-	9.8	-	-	-	pF
		V_{CC} = 2.3 V to 2.7 V		-	13.4	-	-	-	pF
		V_{CC} = 3.0 V to 3.6 V		-	16.6	-	-	-	pF

[1] Typical values are measured at T_{amb} = 25 °C and V_{CC} = 1.2 V, 1.8 V, 2.5 V, 2.7 V and 3.3 V respectively.

[2] t_{pd} is the same as t_{PLH} and t_{PHL}.

[3] Skew between any two outputs of the same package switching in the same direction. This parameter is guaranteed by design.

[4] C_{PD} is used to determine the dynamic power dissipation (P_D in μW).

$P_D = C_{PD} \times V_{CC}^2 \times f_i \times N + \Sigma(C_L \times V_{CC}^2 \times f_o)$ where:

f_i = input frequency in MHz; f_o = output frequency in MHz

C_L = output load capacitance in pF

V_{CC} = supply voltage in V

N = number of inputs switching

$\Sigma(C_L \times V_{CC}^2 \times f_o)$ = sum of outputs

All information provided in this document is subject to legal disclaimers.

© Nexperia B.V. 2017. All rights reserved

11. AC waveforms

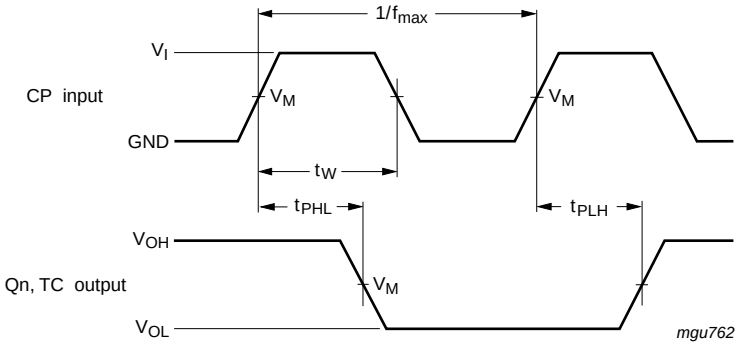

Measurement points are given in Table 8.

V_{OL} and V_{OH} are typical output voltage levels that occur with the output load.

Fig 9. Clock (CP) to outputs (Qn, TC) propagation delays, the clock pulse width, and the maximum frequency

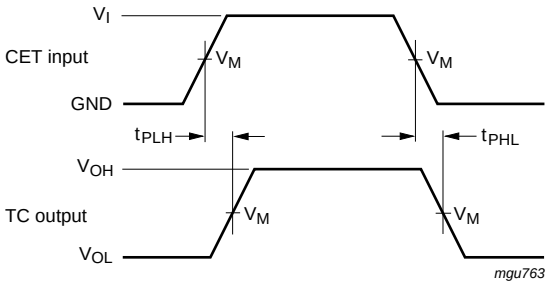

Measurement points are given in Table 8.

V_{OL} and V_{OH} are typical output voltage levels that occur with the output load.

Fig 10. Input (CET) to output (TC) propagation delays

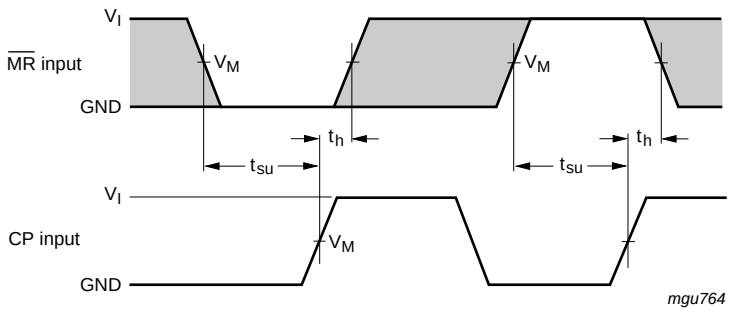

The shaded areas indicate when the input is permitted to change for predictable output performance.

Fig 11. Master reset ($\overline{MR}$) pulse width, the master reset to output (Qn, TC) propagation delays and the master reset to clock (CP) removal times

All information provided in this document is subject to legal disclaimers.

© Nexperia B.V. 2017. All rights reserved

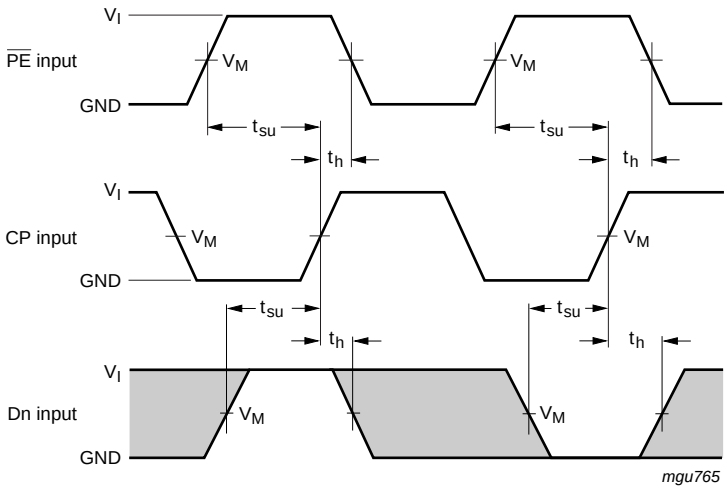

The shaded areas indicate when the input is permitted to change for predictable output performance.

Fig 12. Set-up and hold times for the input (Dn) and parallel enable input ($\overline{PE}$)

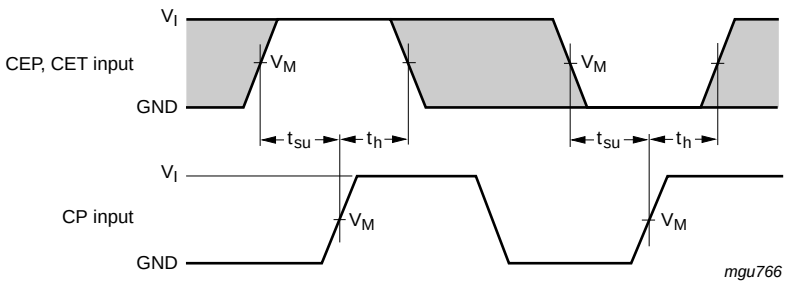

The shaded areas indicate when the input is permitted to change for predictable output performance.

Fig 13. CEP and CET set-up and hold times

Table 8. Measurement points

Supply voltage	Input		Output
V_{CC}	V_I	V_M	V_M
1.2 V	V_{CC}	$0.5 \times V_{CC}$	$0.5 \times V_{CC}$
1.65 V to 1.95 V	V_{CC}	$0.5 \times V_{CC}$	$0.5 \times V_{CC}$
2.3 V to 2.7 V	V_{CC}	$0.5 \times V_{CC}$	$0.5 \times V_{CC}$
2.7 V	2.7 V	1.5 V	1.5 V
3.0 V to 3.6 V	2.7 V	1.5 V	1.5 V

All information provided in this document is subject to legal disclaimers.

© Nexperia B.V. 2017. All rights reserved

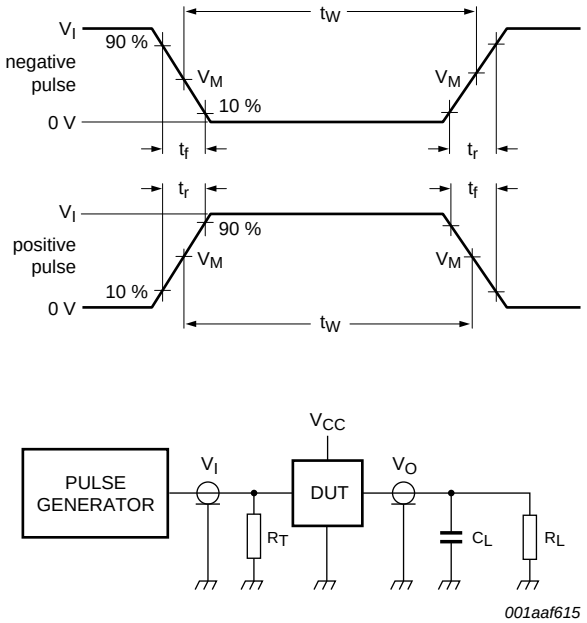

Test data is given in Table 9.

Definitions for test circuit:

R_L = Load resistance.

C_L = Load capacitance including jig and probe capacitance.

R_T = Termination resistance should be equal to output impedance Z_o of the pulse generator.

Fig 14. Load circuitry for switching times

Table 9. Test data

Supply voltage	Input		Load	
	V_I	t_r, t_f	C_L	R_L
1.2 V	V_{CC}	≤ 2 ns	30 pF	1 kΩ
1.65 V to 1.95 V	V_{CC}	≤ 2 ns	30 pF	1 kΩ
2.3 V to 2.7 V	V_{CC}	≤ 2 ns	30 pF	500 Ω
2.7 V	2.7 V	≤ 2.5 ns	50 pF	500 Ω
3.0 V to 3.6 V	2.7 V	≤ 2.5 ns	50 pF	500 Ω

All information provided in this document is subject to legal disclaimers.

© Nexperia B.V. 2017. All rights reserved

12. Package outline

SO16: plastic small outline package; 16 leads; body width 3.9 mm **SOT109-1**

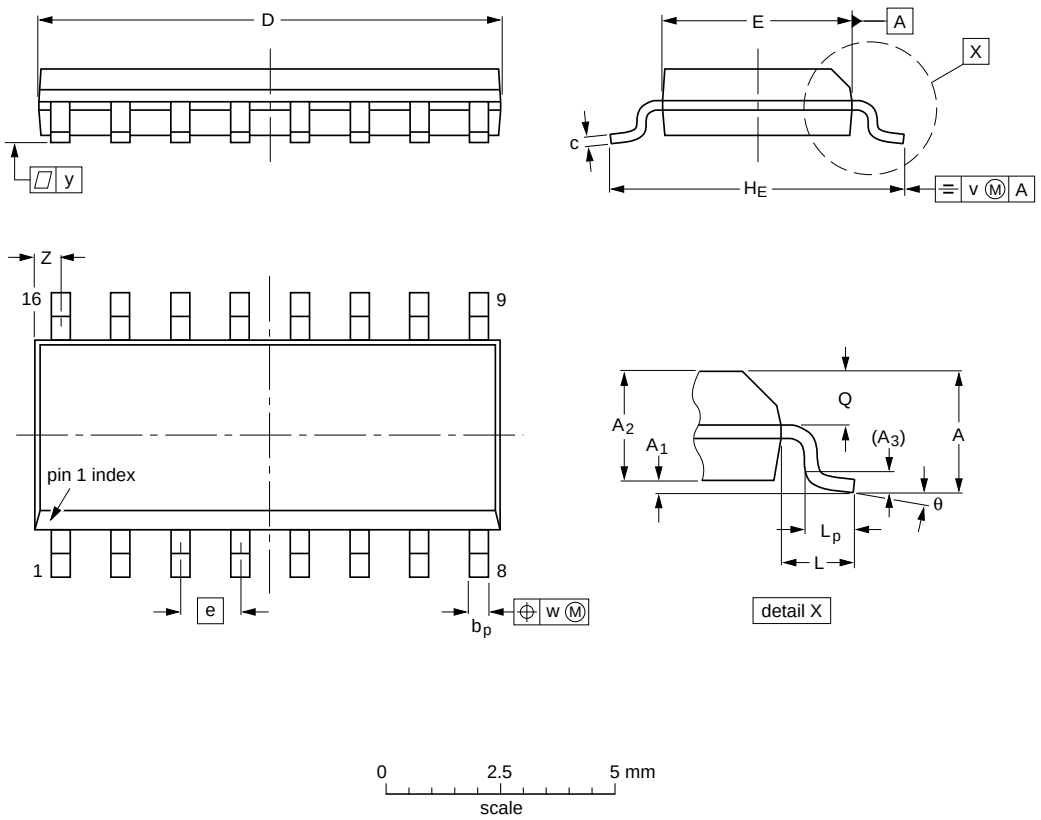

DIMENSIONS (inch dimensions are derived from the original mm dimensions)

UNIT	A max.	A_1	A_2	A_3	b_p	c	D(1)	E(1)	e	H_E	L	L_p	Q	v	w	y	Z(1)	θ
mm	1.75	0.25 0.10	1.45 1.25	0.25	0.49 0.36	0.25 0.19	10.0 9.8	4.0 3.8	1.27	6.2 5.8	1.05	1.0 0.4	0.7 0.6	0.25	0.25	0.1	0.7 0.3	8° 0°
inches	0.069	0.010 0.004	0.057 0.049	0.01	0.019 0.014	0.0100 0.0075	0.39 0.38	0.16 0.15	0.05	0.244 0.228	0.041	0.039 0.016	0.028 0.020	0.01	0.01	0.004	0.028 0.012	

Note

1. Plastic or metal protrusions of 0.15 mm (0.006 inch) maximum per side are not included.

OUTLINE VERSION	REFERENCES				EUROPEAN PROJECTION	ISSUE DATE
	IEC	JEDEC	JEITA			
SOT109-1	076E07	MS-012				~~99-12-27~~ 03-02-19

Fig 15. Package outline SOT109-1 (SO16)

All information provided in this document is subject to legal disclaimers.

© Nexperia B.V. 2017. All rights reserved

SSOP16: plastic shrink small outline package; 16 leads; body width 5.3 mm **SOT338-1**

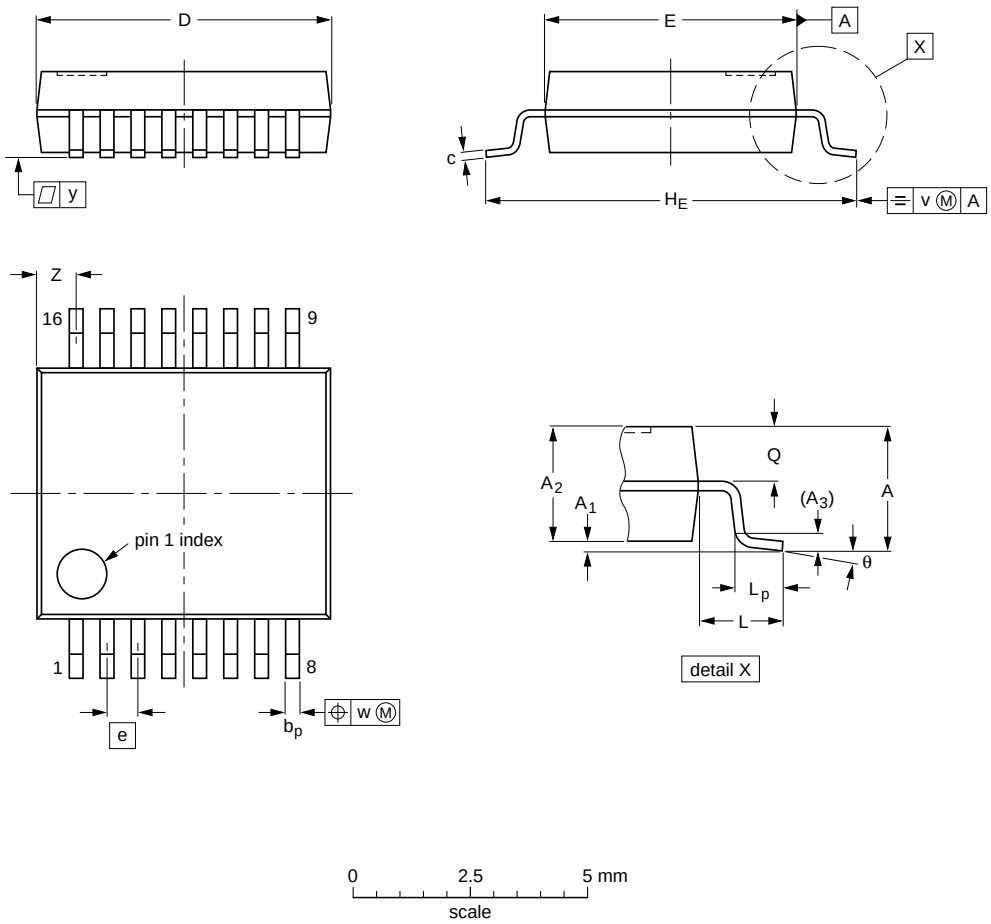

DIMENSIONS (mm are the original dimensions)

UNIT	A max.	A_1	A_2	A_3	b_p	c	D (1)	E (1)	e	H_E	L	L_p	Q	v	w	y	Z (1)	θ
mm	2	0.21 0.05	1.80 1.65	0.25	0.38 0.25	0.20 0.09	6.4 6.0	5.4 5.2	0.65	7.9 7.6	1.25	1.03 0.63	0.9 0.7	0.2	0.13	0.1	1.00 0.55	8° 0°

Note

1. Plastic or metal protrusions of 0.25 mm maximum per side are not included.

OUTLINE VERSION	REFERENCES				EUROPEAN PROJECTION	ISSUE DATE
	IEC	JEDEC	JEITA			
SOT338-1		MO-150				~~99-12-27~~ 03-02-19

Fig 16. Package outline SOT338-1 (SSOP16)

All information provided in this document is subject to legal disclaimers.

© Nexperia B.V. 2017. All rights reserved

TSSOP16: plastic thin shrink small outline package; 16 leads; body width 4.4 mm **SOT403-1**

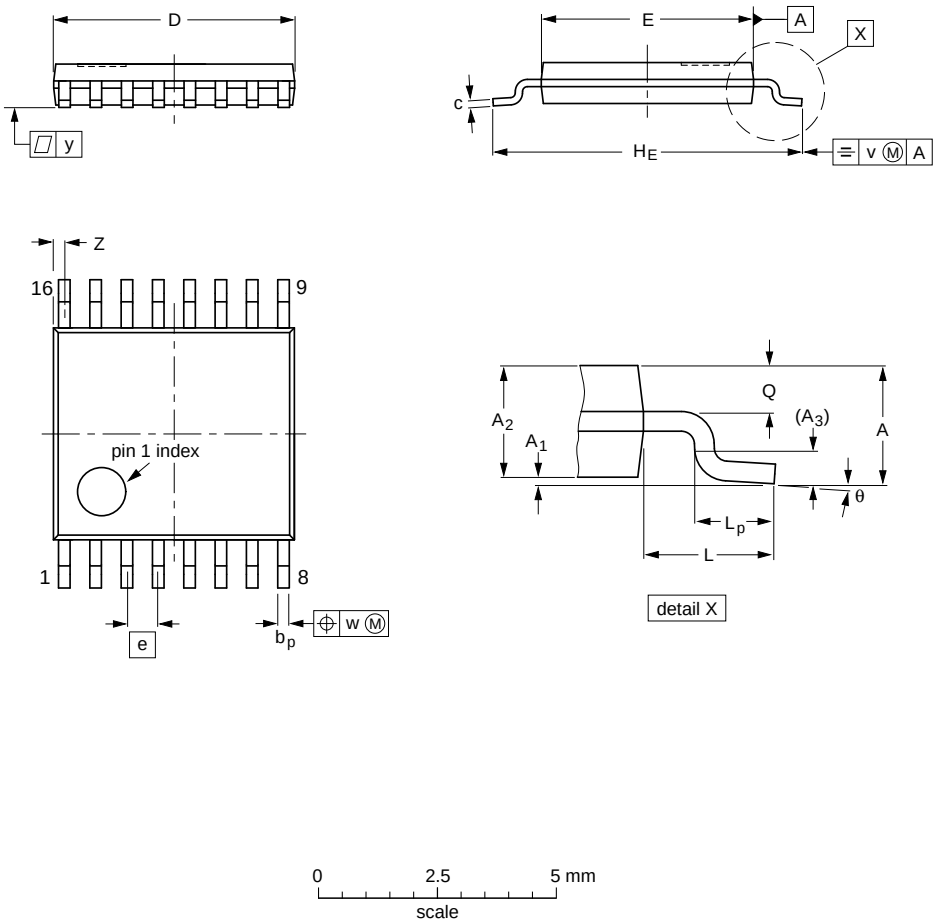

DIMENSIONS (mm are the original dimensions)

UNIT	A max.	A_1	A_2	A_3	b_p	c	D (1)	E (2)	e	H_E	L	L_p	Q	v	w	y	Z (1)	θ
mm	1.1	0.15 0.05	0.95 0.80	0.25	0.30 0.19	0.2 0.1	5.1 4.9	4.5 4.3	0.65	6.6 6.2	1	0.75 0.50	0.4 0.3	0.2	0.13	0.1	0.40 0.06	8° 0°

Notes

1. Plastic or metal protrusions of 0.15 mm maximum per side are not included.
2. Plastic interlead protrusions of 0.25 mm maximum per side are not included.

OUTLINE VERSION	REFERENCES				EUROPEAN PROJECTION	ISSUE DATE
	IEC	JEDEC	JEITA			
SOT403-1		MO-153				~~99-12-27~~ 03-02-18

Fig 17. Package outline SOT403-1 (TSSOP16)

All information provided in this document is subject to legal disclaimers.

© Nexperia B.V. 2017. All rights reserved

DHVQFN16: plastic dual in-line compatible thermal enhanced very thin quad flat package; no leads; 16 terminals; body 2.5 x 3.5 x 0.85 mm **SOT763-1**

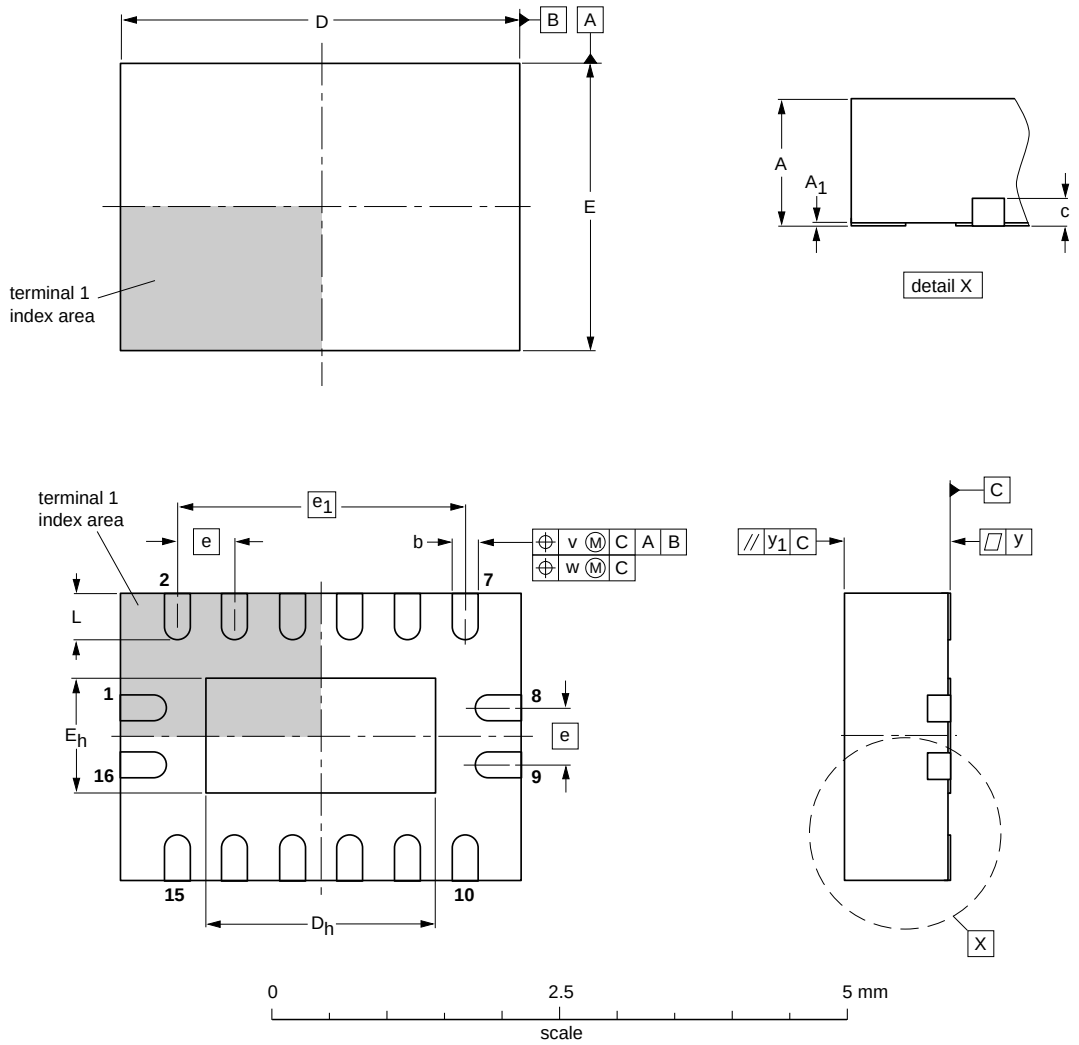

DIMENSIONS (mm are the original dimensions)

UNIT	A(1) max.	A_1	b	c	D(1)	D_h	E(1)	E_h	e	e_1	L	v	w	y	y_1
mm	1	0.05 0.00	0.30 0.18	0.2	3.6 3.4	2.15 1.85	2.6 2.4	1.15 0.85	0.5	2.5	0.5 0.3	0.1	0.05	0.05	0.1

Note

1. Plastic or metal protrusions of 0.075 mm maximum per side are not included.

OUTLINE VERSION	REFERENCES				EUROPEAN PROJECTION	ISSUE DATE
	IEC	JEDEC	JEITA			
SOT763-1	- - -	MO-241	- - -			~~02-10-17~~ 03-01-27

Fig 18. Package outline SOT763-1 (DHVQFN16)

All information provided in this document is subject to legal disclaimers.

© Nexperia B.V. 2017. All rights reserved

13. Abbreviations

Table 10. Abbreviations

Acronym	Description
CDM	Charged Device Model
DUT	Device Under Test
ESD	ElectroStatic Discharge
HBM	Human Body Model
MM	Machine Model
TTL	Transistor-Transistor Logic

14. Revision history

Table 11. Revision history

Document ID	Release date	Data sheet status	Change notice	Supersedes
74LVC163 v.6	20121120	Product data sheet	-	74LVC163 v.5
Modifications:	• The format of this data sheet has been redesigned to comply with the new identity guidelines of NXP Semiconductors. • Legal texts have been adapted to the new company name where appropriate. • Table 4, Table 5, Table 6, Table 7, Table 8 and Table 9: values added for lower voltage ranges.			
74LVC163 v.5	20040505	Product specification	-	74LVC163 v.4
74LVC163 v.4	20030602	Product specification	-	74LVC163 v.3
74LVC163 v.3	20030509	Product specification	-	74LVC163 v.2
74LVC163 v.2	19980520	Product specification	-	74LVC163 v.1
74LVC163 v.1	19960823	Product specification	-	-

All information provided in this document is subject to legal disclaimers.

© Nexperia B.V. 2017. All rights reserved

15. Legal information

15.1 Data sheet status

Document status[1][2]	Product status[3]	Definition
Objective [short] data sheet	Development	This document contains data from the objective specification for product development.
Preliminary [short] data sheet	Qualification	This document contains data from the preliminary specification.
Product [short] data sheet	Production	This document contains the product specification.

[1] Please consult the most recently issued document before initiating or completing a design.

[2] The term 'short data sheet' is explained in section "Definitions".

[3] The product status of device(s) described in this document may have changed since this document was published and may differ in case of multiple devices. The latest product status information is available on the Internet at URL http://www.nexperia.com.

15.2 Definitions

Draft — The document is a draft version only. The content is still under internal review and subject to formal approval, which may result in modifications or additions. Nexperia does not give any representations or warranties as to the accuracy or completeness of information included herein and shall have no liability for the consequences of use of such information.

Short data sheet — A short data sheet is an extract from a full data sheet with the same product type number(s) and title. A short data sheet is intended for quick reference only and should not be relied upon to contain detailed and full information. For detailed and full information see the relevant full data sheet, which is available on request via the local Nexperia sales office. In case of any inconsistency or conflict with the short data sheet, the full data sheet shall prevail.

Product specification — The information and data provided in a Product data sheet shall define the specification of the product as agreed between Nexperia and its customer, unless Nexperia and customer have explicitly agreed otherwise in writing. In no event however, shall an agreement be valid in which the Nexperia product is deemed to offer functions and qualities beyond those described in the Product data sheet.

15.3 Disclaimers

Limited warranty and liability — Information in this document is believed to be accurate and reliable. However, Nexperia does not give any representations or warranties, expressed or implied, as to the accuracy or completeness of such information and shall have no liability for the consequences of use of such information. Nexperia takes no responsibility for the content in this document if provided by an information source outside of Nexperia.

In no event shall Nexperia be liable for any indirect, incidental, punitive, special or consequential damages (including - without limitation - lost profits, lost savings, business interruption, costs related to the removal or replacement of any products or rework charges) whether or not such damages are based on tort (including negligence), warranty, breach of contract or any other legal theory.

Notwithstanding any damages that customer might incur for any reason whatsoever, Nexperia's aggregate and cumulative liability towards customer for the products described herein shall be limited in accordance with the *Terms and conditions of commercial sale* of Nexperia.

Right to make changes — Nexperia reserves the right to make changes to information published in this document, including without limitation specifications and product descriptions, at any time and without notice. This document supersedes and replaces all information supplied prior to the publication hereof.

Suitability for use — Nexperia products are not designed, authorized or warranted to be suitable for use in life support, life-critical or safety-critical systems or equipment, nor in applications where failure or malfunction of a Nexperia product can reasonably be expected to result in personal injury, death or severe property or environmental damage. Nexperia and its suppliers accept no liability for inclusion and/or use of Nexperia products in such equipment or applications and therefore such inclusion and/or use is at the customer's own risk.

Applications — Applications that are described herein for any of these products are for illustrative purposes only. Nexperia makes no representation or warranty that such applications will be suitable for the specified use without further testing or modification.

Customers are responsible for the design and operation of their applications and products using Nexperia products, and Nexperia accepts no liability for any assistance with applications or customer product design. It is customer's sole responsibility to determine whether the Nexperia product is suitable and fit for the customer's applications and products planned, as well as for the planned application and use of customer's third party customer(s). Customers should provide appropriate design and operating safeguards to minimize the risks associated with their applications and products.

Nexperia does not accept any liability related to any default, damage, costs or problem which is based on any weakness or default in the customer's applications or products, or the application or use by customer's third party customer(s). Customer is responsible for doing all necessary testing for the customer's applications and products using Nexperia products in order to avoid a default of the applications and the products or of the application or use by customer's third party customer(s). Nexperia does not accept any liability in this respect.

Limiting values — Stress above one or more limiting values (as defined in the Absolute Maximum Ratings System of IEC 60134) will cause permanent damage to the device. Limiting values are stress ratings only and (proper) operation of the device at these or any other conditions above those given in the Recommended operating conditions section (if present) or the Characteristics sections of this document is not warranted. Constant or repeated exposure to limiting values will permanently and irreversibly affect the quality and reliability of the device.

Terms and conditions of commercial sale — Nexperia products are sold subject to the general terms and conditions of commercial sale, as published at http://www.nexperia.com/profile/terms, unless otherwise agreed in a valid written individual agreement. In case an individual agreement is concluded only the terms and conditions of the respective agreement shall apply. Nexperia hereby expressly objects to applying the customer's general terms and conditions with regard to the purchase of Nexperia products by customer.

No offer to sell or license — Nothing in this document may be interpreted or construed as an offer to sell products that is open for acceptance or the grant, conveyance or implication of any license under any copyrights, patents or other industrial or intellectual property rights.

All information provided in this document is subject to legal disclaimers.

© Nexperia B.V. 2017. All rights reserved

Export control — This document as well as the item(s) described herein may be subject to export control regulations. Export might require a prior authorization from competent authorities.

Non-automotive qualified products — Unless this data sheet expressly states that this specific Nexperia product is automotive qualified, the product is not suitable for automotive use. It is neither qualified nor tested in accordance with automotive testing or application requirements. Nexperia accepts no liability for inclusion and/or use of non-automotive qualified products in automotive equipment or applications.

In the event that customer uses the product for design-in and use in automotive applications to automotive specifications and standards, customer (a) shall use the product without Nexperia's warranty of the product for such automotive applications, use and specifications, and (b) whenever customer uses the product for automotive applications beyond Nexperia's specifications such use shall be solely at customer's own risk, and (c) customer fully indemnifies Nexperia for any liability, damages or failed product claims resulting from customer design and use of the product for automotive applications beyond Nexperia's standard warranty and Nexperia's product specifications.

Translations — A non-English (translated) version of a document is for reference only. The English version shall prevail in case of any discrepancy between the translated and English versions.

15.4 Trademarks

Notice: All referenced brands, product names, service names and trademarks are the property of their respective owners.

16. Contact information

For more information, please visit: **http://www.nexperia.com**

For sales office addresses, please send an email to: **salesaddresses@nexperia.com**

All information provided in this document is subject to legal disclaimers.

© Nexperia B.V. 2017. All rights reserved

17. Contents

1 General description 1
2 Features and benefits 1
3 Ordering information 2
4 Functional diagram 2
5 Pinning information 5
5.1 Pinning 5
5.2 Pin description 5
6 Functional description 6
7 Limiting values 6
8 Recommended operating conditions 7
9 Static characteristics 7
10 Dynamic characteristics 8
11 AC waveforms 10
12 Package outline 13
13 Abbreviations 17
14 Revision history 17
15 Legal information 18
15.1 Data sheet status 18
15.2 Definitions 18
15.3 Disclaimers 18
15.4 Trademarks 19
16 Contact information 19
17 Contents 20

© Nexperia B.V. 2017. All rights reserved

For more information, please visit: http://www.nexperia.com
For sales office addresses, please send an email to: salesaddresses@nexperia.com
Date of release: 20 November 2012