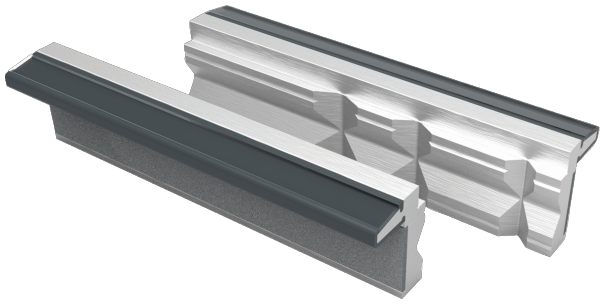

202561-202581

Protective Aluminium Jaws with Grooves for Bench Vice

PRODUCT DETAILS

- Protective jaw set for delicate work
- Aluminium jaws with deep horizontal and vertical groove
- Includes built-in power magnet to fix the jaw in a steel vice
- Designed for vertical clamping of round objects
- 90° recess in the top to hold flat bar stock while marking out or centre punching
- Horizontal V-groove with 120° angle for clamping pipes and other round workpieces
- Three vertical V-grooves with angles of 100°, 120° and 130° for clamping pipes and other round workpieces
- Extremely powerful neodymium magnetic strip

PRODUCT ATTRIBUTES

Product		g
202561	100 mm	180 g
202571	125 mm	200 g
202581	150 mm	220 g

sales@prom-elec.com / ООО ПРОМЭЛЕКТРОНИКА